

REQUEST FOR PROPOSALS

FOR

Phase 7 Pile Remediation – Marine Construction Services

Table of Contents

I. SUMMARY 1

II. GENERAL PROVISIONS 1

III. TIMETABLE & DESIGNATED CONTACT 2

A. Key Dates 2

B. Anticipated Contract Term 2

IV. GENERAL REQUIREMENTS 2

A. Minimum Qualification Requirements 2

B. MBE/WBE/SDVOB Participation, Joint Ventures, and Sub-contracting Goals 3

C. Restricted Period 3

D. Submission of Proposals 3

V. PROPOSAL FORMAT AND CONTENTS 4

A. Proposal Format 4

B. Proposal Content 4

VI. INFORMATION REQUIRED 4

A. Questions and Information Sought Relating to the Work 4

B. Questions and Information Sought Relating to Proposer's Firm & Eligibility 5

C. Required Attachments 6

VII. INSURANCE/BONDING REQUIREMENTS 6

A. General Requirements 6

B. Insurance Requirements for the Selected Proposer 7

C. Insurance Requirements for all Subcontractors 8

D. Bonding 9

VIII. COST PROPOSAL: FORMAT AND REQUIRED INCLUSIONS 9

IX. SELECTION PROCESS 9

A. Evaluation 9

B. Interviews 9

C. Evaluation Criteria for Selection 9

D. Basis for Contract Award 10

X. NON-COLLUSION 10

XI. IRAN DIVESTMENT ACT 10

XII. ENCOURAGING USE OF NEW YORK STATE BUSINESSES IN CONTRACT PERFORMANCE 11

EXHIBIT A – SCOPE OF WORK

EXHIBIT B – MBE/WBE/SDVOB REQUIREMENTS, MBE/WBE AND EEO POLICY STATEMENT, & MBE/WBE DIVERSITY PRACTICES QUESTIONNAIRE

EXHIBIT C – BPCA'S STANDARD FORM OF CONTRACT

EXHIBIT D – COST PROPOSAL

EXHIBIT E – SCHEDULE OF VALUES

EXHIBIT F – LABOR RATES

EXHIBIT G – DRAWINGS & SPECIFICATIONS
EXHIBIT H – PROJECT AREA MAPS
EXHIBIT I – PERMITS
EXHIBIT J – ACKNOWLEDGEMENT OF ADDENDA
EXHIBIT K – LIST OF BPCA & BPCPC BOARD MEMBERS AND EMPLOYEES

I. SUMMARY

Battery Park City Authority, d/b/a Hugh L. Carey Battery Park City Authority ("BPCA"), requests proposals (individually, a "Proposal" or collectively, the "Proposals") from general or marine contractors (each individually, a "Proposer" or collectively, the "Proposers") to provide BPCA with marine construction services for the Phase 7 Pile Remediation - Marine Construction Services Project, as described in the Scope of Work (Exhibit A) and in the Drawings and Specifications (Exhibit G) (collectively, the "Project" or the "Work"). The Work will be performed beneath three (3) distinct areas of the Battery Park City Pedestrian Esplanade (the "Esplanade"): (1) Wagner Park, Bents 1-50, approximately 424 piles; (2) the Esplanade area adjacent to and north of Rector Place, Bents 44-62, approximately 157 piles; and (3) the Esplanade area in Rockefeller Park (just north of the Ferry Terminal), Bents 74-88, approximately 103 piles (each, together with the approved points of access thereto, a "Project Area", and collectively, the "Project Areas").

Created in 1968, BPCA is a New York State public benefit corporation that is responsible for financing, developing, constructing, maintaining, and operating Battery Park City as a richly diversified, mixed-use community providing residential and commercial space, with related amenities such as parks, plazas, recreational areas, and a waterfront esplanade. A summary of BPCA's structure, mission, and history, as well as the Battery Park City catchment area, may be viewed at: www.bpca.ny.gov. Public information regarding BPCA's finances, budget, internal controls, guidelines, and policies may be viewed at: www.bpca.ny.gov/public-information. Information related to the Battery Park City Parks Conservancy Corporation ("BPCPC"), BPCA's affiliate, may be viewed at: www.bpcparks.org.

New York State-certified Minority-Owned Business Enterprises ("MBE"), Women-Owned Business Enterprises ("WBE"), and Service-Disabled Veteran-Owned Business Enterprises ("SDVOB") are encouraged to submit Proposals.

II. GENERAL PROVISIONS

This Request for Proposals, including all attachments, exhibits, and any amendments or addenda (collectively, the "RFP"), is subject to the rights reserved by BPCA – including, but not limited to, BPCA's right to:

- Withdraw and/or cancel this RFP at any time before final award of the contract;
- Request clarification, revisions, and/or additional information from any or all Proposers;
- Amend any term or requirement of this RFP at any time before award of the contract (Proposers may amend their Proposals, as directed by BPCA, if BPCA materially alters or amends the RFP after submission of Proposals);
- Alter any key dates or deadlines related to this RFP;
- Waive any non-material requirements;
- Award the Work, in whole or in part, to one or more Proposers with or without interviews or negotiations;
- Reject any Proposal that does not strictly conform to the requirements of this RFP;
- Conduct an interview with any or all of the Proposers to aid the evaluation process;
- Request a best and final offer from any of the Proposers;
- Negotiate potential contract terms with any Proposer.

BPCA further reserves the right to amend the Project's Scope of Work during the course of the Project to include additional pile repairs if found to be required and to add a select number of piles not currently identified in the Project Scope of Work.

BPCA is not liable or responsible in any way for any expenses incurred in the preparation of a Proposal in response to this RFP. All information submitted in response to this RFP is subject to the Freedom of Information Law, Article 6 of the New York State Public Officers Law ("FOIL"), which requires public access to certain documents possessed by BPCA, unless a specific exemption applies. Proposers are responsible for identifying any information in their respective Proposals considered to be confidential and exempt from FOIL. BPCA, however, is obligated to disclose information consistent with the requirements of FOIL, New York State Public Officers Law Section 87.

III. TIMETABLE & DESIGNATED CONTACT

A. *Key Dates*

Subject to change at BPCA's discretion, the following are key dates for this RFP:

- RFP issued: July 7, 2020
- Pre-proposal meeting: July 13, 2020 at 10:00 a.m. The pre-proposal meeting will be held via GoToMeeting. Please RSVP to Michael.LaMancusa@bpca.ny.gov by July 10, 2020 at 12:00 p.m.
- Deadline to submit questions to BPCA: July 21, 2020 , by 5:00 p.m. (by email only)
  All questions regarding this RFP should be submitted in writing via email to the "Designated Contact": Michael LaMancusa, Assistant Contracting Officer, Battery Park City Authority, at michael.lamancusa@bpca.ny.gov.
- BPCA's response to substantive questions: July 27, 2020 (via BPCA's website)
- PROPOSAL DUE DATE: August 3, 2020 by 5:00 p.m. (the "Due Date")
- Interview Dates: In the event that BPCA determines that interviews are desired, such interviews will be scheduled on August 10 and/or 11, 2020.
- Contract start date: Early September 2020 (target)

B. *Anticipated Contract Term*

It is anticipated that the term of the contract or contracts awarded pursuant to this RFP (the "Contract" or "Contracts") will be eighteen (18) months, with the Project's construction to be conducted in two (2) phases during the 2020 and 2021 in-water construction seasons. Phase 1 of the Work, which will consist of as much of Project Area 1 as is feasible within the 2020 time allowed, will commence in early September 2020 and be completed by November 30, 2020 assuming a thirty (30) day extension of the normal October 31 deadline for in-water construction is secured by the selected Proposer. Phase 2, consisting of all elements of the Work not completed in Phase 1 will commence in May 2021 and be completed by no later than November 30, 2021.

IV. GENERAL REQUIREMENTS

A. *Minimum Qualification Requirements*

The following are the minimum qualification requirements for this RFP. Proposals that fail to meet these requirements will be rejected.

1) The Proposer must be lawfully authorized to do business in the State of New York.

2) The Proposer (or one or more of its principals or subcontractors) must have at least five (5) years of experience performing marine repair work.

B. ***MBE/WBE/SDVOB Participation, Joint Ventures, and Sub-contracting Goals***

Contractor requirements and procedures for business participation opportunities for New York State certified MBEs/WBEs/SDVOBs and equal employment opportunity requirements relating to minority group members and women are attached as Exhibit B. For questions related to MBE/WBE/SDVOB participation, joint ventures and sub-contracting goals *only*, please contact the "MBE/WBE/SDVOB Designated Contact" Mr. Justin McLaughlin-Williams at Justin.McLaughlin-Williams@bpca.ny.gov or 212-417-2337.

C. ***Restricted Period***

New York State's State Finance Law Sections 139-j and 139-k apply to this RFP, restricting Proposers' contacts with BPCA. Proposers are restricted from making any contact (defined as oral, written, or electronic communications with BPCA under circumstances where a reasonable person would infer that a communication was intended to influence BPCA's conduct or decision with respect to a procurement) relating to this RFP with anyone other than the Designated Contact, as specified in Section III.A., or MBE/WBE/SDVOB Designated Contact, as specified in Section IV.B., from the time of Proposer's receipt of notice of this RFP through the date of the Final Award as defined in BPCA's Procurement Guidelines (the "Restricted Period"). BPCA employees must record certain contacts during the Restricted Period, including, but not limited to, any oral or written communications that could reasonably be seen as intended to influence BPCA's conduct or award of this RFP. Upon notice of an improper contact, BPCA shall make a determination regarding the Proposer's eligibility to continue participating in this RFP.

D. ***Submission of Proposals***

Proposals must be received by BPCA no later than 5:00 p.m. on August 3, 2020.

Each Proposer must e-mail its Technical Proposal to the following e-mail address: technicalproposals@bpca.ny.gov. The Technical Proposal must be clearly labeled as "Proposal Enclosed – Phase 7 Pile Remediation – Marine Construction Services."

Each Proposer must also e-mail its Cost Proposal to the following e-mail address: costproposals@bpca.ny.gov. The Cost Proposal must be separately attached and clearly labeled as "Cost Proposal – Phase 7 Pile Remediation – Marine Construction Services." Please note that, if a Proposer will be providing financial information that it deems confidential in nature, it may submit the financial information with its Cost Proposal to the below secure email address: costproposals@bpca.ny.gov. Alternatively, the financial information may be sent to the same e-mail address as a separate password-protected document.

Each Proposer is responsible for the successful delivery and receipt of their Proposal. BPCA is not accepting Proposals sent via messenger, overnight courier, or certified mail to BPCA offices. If a Proposer has already sent a Proposal via one of these methods, please e-mail the Proposal to the above e-mail address by the Due Date. If a Technical Proposal's file size is too large to submit by e-mail, the Proposer must make alternate electronic accommodations (e.g., linking to a file sharing website), which shall also be transmitted through technicalproposals@bpca.ny.gov . Please contact the Designated Contact prior to the Due Date in order to ensure successful transmission of the documents prior to the Due Date.

Proposals must arrive at the time and place specified herein. Please leave ample time for submission. Late Proposals, no matter the cause of their lateness, will NOT be accepted. Hard copy or faxed Proposals will NOT be accepted. A Proposer may, after submitting a Proposal, amend its Proposal by submitting an amended Proposal, clearly labeled "Amended Proposal – Phase 7 Pile Remediation – Marine Construction Services," **as long as the amended Proposal is submitted by the Due Date.**

This likewise applies to any and all additional references to the Proposal submission method contained within the Phase 7 Pile Remediation – Marine Construction Services - Request for Proposals document.

V. PROPOSAL FORMAT AND CONTENTS

A. *Proposal Format*

The Proposal must:

- Be in 8½" x 11" format; and,
- Have numbered pages.

B. *Proposal Content*

In addition to the Cost Proposal, as described in Sections IV. D (above) and VIII (below), the Proposal must include the following in the order listed:

1) Cover Letter, signed by a person within the firm who is authorized to bind the Proposer, which includes representations that:

   (a) Except as disclosed in the Proposal, no officer or employee of the Proposer is directly or indirectly a party to, or in any other manner interested financially or otherwise, in this RFP;

   (b) Proposer satisfies all of the minimum qualification requirements in Section IV.A; and,

   (c) Proposer has reviewed BPCA's Standard Form of Contract, attached as Exhibit C to this RFP, and either has no objections or has detailed their objections in an appendix to their Proposal.

2) Executive Summary.

3) Responses to the Questions as well as all of the Information Required (Sections VI.A. and B.).

4) Required Attachments (Section VI.C.).

BPCA reserves the right to reject any Proposals that fail to include any required item described in this Section V. B., including Cover Letters that are unsigned or that fail to include each of the above representations (including an appendix, if applicable).

VI. INFORMATION REQUIRED

A. Questions and Information Sought Relating to the Work

1) Describe your firm's background, services, size, and history – as these factors may be relevant to the Project – with an emphasis on marine construction experience at waterfront facilities within New York City.

2) Describe your firm's experience performing concrete and epoxy pile jacketing.

3) Submit a description of your approach to the Project, which shall address your proposed procedures, methodology, sequencing, impact mitigation, and schedule for the Project. Please include a description of your proposed means of accessing all pertinent points within the Project Areas.

4) Describe your approach to staffing the Project, and identify all staff members and sub-contractors that you intend to involve in the Work. List each key member of the team that you intend to assign to this engagement, and include for each listed individual: (a) area(s) of specialization; (b) title and/or position within your firm; (c) years and type(s) of relevant experience; and (d) the services to be performed.

5) Describe any recent developments in technology or methodologies that may inform or affect your firm's approach to the Project.

6) Identify the person who will be the lead project manager (the "Lead PM") and primary contact in providing services to BPCA, and identify any other persons who will be listed as a "key person" in any contract with BPCA.

7) Describe your proposed team's experience (including both direct contract work and work performed under sub-contracts) with similar work for other public entities, with an emphasis on New York State and New York City public entities. Include contract dates, the nature of the work performed, the contracting agency, the contract number (if known), and the supervisor for each of them.

8) Clearly identify any information in your Proposal that you believe to be confidential and exempt from FOIL, and state the reasons. Please note that this question is for informational purposes only, and BPCA will determine, in its sole discretion, whether requested documents are exempt from disclosure under FOIL.

9) Identify any and all exceptions taken to BPCA's Standard Form of Contract, attached as Exhibit C, explaining the reasons for such exceptions. Such exceptions must be detailed in an appendix to your Proposal labeled, "Appendix: Objections to BPCA Form of Contract." No exceptions to the Contract will be considered by BPCA after submission of the Proposals. BPCA maintains the right to reject Proposals based on non-conformance with the Standard Form of Contract.

10) Provide at least three (3) client references for whom your firm has performed similar work to that requested in this RFP. For each client, describe the project, the project's date, services performed, and the name, address, and telephone number for a person at the client's firm who is familiar with such work.

B. Questions and Information Sought Relating to Proposer's Firm & Eligibility

1) Within the past three (3) years, have there been any significant developments in your firm such as changes in ownership or restructuring? Do you anticipate any significant changes in the near future? If so, please describe.

2) How does your firm identify and manage conflicts of interest?

3) Are there any potential conflict of interest issues posed by your firm's performance of the Work on behalf of BPCA?

4) Has your firm, or have any of the firm's partners/employees, been disciplined or censured by any regulatory body within the last five (5) years? If so, please describe the relevant facts.

5) Within the last five (5) years, has your firm, or a partner or employee in your firm, been involved in litigation or other legal proceedings relating to the provision of professional services? If so, please provide an explanation and the current status or disposition of the matter.

6) List any professional or personal relationships your firm's employees may have with BPCA's Board Members and/or employees, a list of which is attached as Exhibit K.

7) If selected, will your firm assign any person to this engagement who was previously an employee of BPCA or BPCPC? If so, please: i) identify when (month and year) that person's employment at BPCA/BPCPC terminated, and ii) describe that person's involvement, if any, with matters related to this RFP during his/her employment at BPCA/BPCPC.

8) In the past five (5) years, have any public sector clients terminated their working relationship with your firm? If so, please provide a brief statement of the reasons. Provide the name of the client and provide a contact person, address and telephone number.

C. ***Required Attachments***

1) Mandatory Forms:

Each Proposal must include a completed copy of all "Mandatory Forms" found at: www.bpca.ny.gov/wp-content/uploads/2020/03/Vendor_Responsibility_Questionnaire_3_27_20.pdf. ****Please use the forms provided in this updated link.***

The Mandatory Forms include the following:

a) NYS Standard Vendor Responsibility Questionnaire, signed by the individual(s) authorized to contractually bind the Proposer, indicating the signer's title/position within the firm.*
b) State Finance Law § 139 Form 1, signed by the individual(s) authorized to contractually bind the Proposer.*
c) W-9 form.
d) Statement of Non-Collusion.
e) MBE/WBE/SDVOB Utilization Plans. Please note that all such plans must be submitted even if Proposer is a MBE/WBE/SDVOB.

* Proposers must provide a clear electronic copy of the completed and signed NYS Standard Vendor Responsibility Questionnaire and SFL 139 Form 1 as part of the Proposal. Proposers must also retain the completed originals of the forms, with ink signatures, and provide to BPCA upon request.

VII. INSURANCE AND BONDING REQUIREMENTS

A) General Requirements

The total cost of the required insurance listed in paragraphs 2) and 3) below, must be incorporated into the Cost Proposal. The additional insured protection afforded BPCA, BPCPC, and the State of New York must be on a primary and non-contributory basis. All policies must include a waiver of subrogation in favor of BPCA, BPCPC, and the State of New York, no policies may contain any limitations / exclusions

for New York Labor Law claims, and cross liability coverage must be provided for BPCA, BPCPC, and the State of New York.

All of the carriers that provide the below required insurance must be rated "A-: VII" or better by A.M. Best and must provide direct written notice of cancellation or non-renewal to BPCA, BPCPC, and the State of New York at least 30 days before such cancellation or non-renewal is effective, except for cancellations due to non-payment of premium, in which case 10 days written notice is acceptable.

B) Insurance Requirements for the Selected Proposer

The selected Proposer will be required to obtain and provide proof of the types and amounts of insurance listed below, before and throughout performance of the Work. The insurance policies listed below must also conform to the applicable terms of the Contract, as shown in BPCA's sample form of contract attached.

- **Commercial General Liability Insurance**, written on ISO Form CG 00 01 or its equivalent and with no modification to the contractual liability coverage provided therein, shall be provided on an occurrence basis and limits shall not be less than:

    - $6,000,000 per occurrence
    - $7,000,000 general aggregate which must apply on a per location / per project basis
    - $7,000,000 products/completed operations aggregate

BPCA, BPCPC, and the State of New York must be protected as additional insureds on ISO Form CG 2010 (11/85) or its equivalent on policies held by the selected Proposer and any of its subcontractors. Should the Proposer's work include construction activities of any kind then the Proposer must maintain Products / Completed Operations coverage for no less than three years after the construction work is completed, and continue to include Additional Insured protection for BPCA, BPCPC & The State of New York for the prescribed timeframe. When providing evidence of insurance the Proposer must include a completed Acord 855 NY form. Securing the required limits via a combination of primary and umbrella/excess liability policies is allowed. The General Aggregate limit must apply on a per project basis on the primary General Liability policy should a combination of primary and Umbrella/Excess liability policies be utilized to secure the required total limits of coverage.

- **Automobile Liability Insurance** with a combined single limit of not less than $1,000,000. Coverage must apply to the Proposer's owned, hired, and non-owned vehicles and protect BPCA, BPCPC, and the State of New York as additional insured.

- **Workers' Compensation, Employer's Liability, and Disability Benefits** shall not be less than statutory limits, including United States Longshore and Harbor Workers Act coverage as applicable to the operations of the Proposer.

- **Builder's Risk / Installation Floater Insurance** in an amount not less than 100% of the full contract price. Coverage must be written on ISO Special Form CP 10 30 04 02 or its equivalent on a completed value non-reporting basis and provide coverage for the Proposer, all subcontractors, BPCA, BPCPC, and the State of New York. Coverage must apply to property while on site, off site, and in transit, include an agreed amount provision which eliminates any coinsurance provision, and include BPCA as a loss payee. Coverage must include the insurable interests of all subcontractors retained by the Proposer.

- **Contractor's Pollution Liability Insurance** covering bodily injury, property damage, clean-up

costs/remediation expenses and legal defense costs. Such insurance shall provide coverage for sudden and non-sudden pollution conditions arising out of the proposer's operations in Battery Park City. The limit of coverage shall not be less than $1,000,000 per occurrence. BPCA, BPCPC, and the State of New York must be protected as additional insureds on policies held by the selected Proposer and any of its subcontractors.

- If the Proposer's work will include the use of any watercraft, then **Comprehensive Marine Liability Insurance** must be maintained at a limit of not less than $1,000,000 per occurrence and include the following coverage:

  - Protection and indemnity
  - General liability
  - Pollution liability

BPCA, BPCPC, and the State of New York must be protected as additional insureds on policies held by the selected Proposer and any of its subcontractors.

C) Insurance Requirements for all Subcontractors

Any subcontractor(s) utilized by the selected Proposer will be required to obtain the types and amounts of insurance listed below. (i) as a condition of commencing any Work; and (ii) continuing throughout the duration of the subcontractor's Work. The insurance policies listed below must also conform to the applicable terms of the Contract, as shown in BPCA's sample form of contract attached:

- **Commercial General Liability Insurance**, written on ISO Form CG 00 01 or its equivalent and with no modification to the contractual liability coverage provided therein, shall be provided on an occurrence basis and limits shall not be less than:

  - $1,000,000 per occurrence
  - $2,000,000 general aggregate which must apply on a per location / per project basis
  - $2,000,000 products/completed operations aggregate

BPCA, BPCPC, and the State of New York must be protected as additional insureds on ISO Form CG 2010 (11/85) or its equivalent on policies held by all subcontractors. Should the subcontractor's work include construction activities of any kind then the subcontractor must maintain Products / Completed Operations coverage for no less than three years after the construction work is completed and continue to include Additional Insured protection for BPCA, BPCPC & The State of New York for the prescribed timeframe. When providing evidence of insurance the subcontractor must include a completed Acord 855 NY form.

- **Automobile Liability Insurance** with a combined single limit of not less than $1,000,000. Coverage must apply to the subcontractor's owned, hired, and non-owned vehicles and protect BPCA, BPCPC, and the State of New York as additional insured.

- **Workers' Compensation, Employer's Liability, and Disability Benefits** shall not be less than statutory limits, including United States Longshore and Harbor Workers Act coverage as applicable to the operations of the subcontractor.

- **Subcontractors will also be required to obtain all other insurances listed in Section (2) unless otherwise approved in writing by BPCA prior to commencement of any Subcontractor's work.**

D) Bonding
A performance and payment bond are both required. Provide a letter from your surety (ies) stating that you are able to provide a payment and performance bond, as required by the Standard Form of Contract (attached hereto as Exhibit C)

VIII. COST PROPOSAL: FORMAT AND REQUIRED INCLUSIONS

Each Cost Proposal must state a lump-sum cost for the performance of all Work and include each of the following:

1) Cost Proposal in the form attached hereto as Exhibit D;
2) Schedule of Values in the form attached hereto as Exhibit E; and,
3) Labor Rates in the form attached hereto as Exhibit F.

The Cost Proposal must be submitted separately, in accordance with the instructions provided in Section IV. D, above.

IX. SELECTION PROCESS

A. *Evaluation*

Each timely-submitted Proposal will be reviewed for compliance with the form and content requirements of this RFP. A committee of BPCA employees selected by BPCA (the "Committee") will then review and evaluate the Proposals in accordance with the evaluation criteria set forth below. While only Committee members will score the evaluation criteria, the Committee may consult an outside expert for advisement on the evaluation of matters requiring technical expertise. Before final selection, BPCA must determine that the proposed selected Proposer is responsible, in accordance with applicable law and BPCA's Procurement Guidelines, which may be viewed at: www.bpca.ny.gov/public-information.

B. *Interviews*

BPCA reserves the right to decide whether to interview any or all of the Proposers. The Committee may conduct interviews for many reasons, including to further assess a Proposer's ability to perform the Work or provide specific services, or to seek information related to any other evaluation criteria. The proposed Lead PM, as well all other key personnel proposed to perform the Work, must be available to participate in the interview.

C. *Evaluation Criteria for Selection.*

Selection of a Proposer will be based on the following criteria:

1) Technical Evaluation:

- Expertise and experience with relevant in-water marine construction work, especially work at waterfront facilities in New York City and work that includes pile repair, and concrete and epoxy pile jacketing……..……..……35%

- Approach to work, including methodology, phasing, area impacts, and schedule……..30%

- Proposed Project staffing, including subcontractors……...25%

- Response to MBE/WBE Diversity Practices Questionnaire……...10%

2) Cost Proposal evaluation.

D. ***Basis for Contract Award***

The Contract will be awarded to the highest technically rated Proposer whose Proposal is determined to be responsive and in the best interests of BPCA, subject to a determination that the Cost Proposal is fair, reasonable, and provides the best value to BPCA given the requirements of the project.

X. NON-COLLUSION

By submitting a Proposal, each Proposer warrants and represents that any ensuing Contract has not been solicited or secured directly or indirectly in a manner contrary to the laws of the State of New York, and that said laws have not been violated and shall not be violated as they relate to the procurement or the performance of the Contract by any conduct, including the paying or giving of any fee, commission, compensation, gift, or gratuity or consideration of any kind, directly or indirectly, to any member of the board of directors, employee, officer or official of BPCA.

XI. IRAN DIVESTMENT ACT

By submitting a Proposal or by assuming the responsibility of any Contract awarded hereunder, each Proposer certifies that it is not on the "Entities Determined To Be Non-Responsive Bidders/Offerers Pursuant to The New York State Iran Divestment Act of 2012" list ("Prohibited Entities List") posted on the New York State Office of General Services website at: http://www.ogs.ny.gov/about/regs/docs/ListofEntities.pdf and further certifies that it will not utilize any subcontractor/consultant that is identified on the Prohibited Entities List on this Contract. The selected Proposer agrees that should it seek to renew or extend any Contract awarded hereunder, it must provide the same certification at the time the Contract is renewed or extended. The selected Proposer also agrees that any proposed assignee of the Contract will be required to certify that it is not on the Prohibited Entities List before BPCA may approve a request for assignment of the Contract.

During the term of any Contract awarded hereunder, should BPCA receive information that a person (as defined in State Finance Law §165-a) is in violation of the above-referenced certifications, BPCA will review such information and offer the person an opportunity to respond. If the person fails to demonstrate that it has ceased its engagement in the investment activity which is in violation of the New York State Iran Divestment Act of 2012 within 90 days after the determination of such violation, then BPCA shall take such action as may be appropriate and provided for by law, rule, or contract, including, but not limited to, seeking compliance, recovering damages, or declaring the selected Proposer in default of the awarded Contract.

BPCA reserves the right to reject any request for renewal, extension, or assignment for an entity that appears on the Prohibited Entities List prior to the renewal, extension, or assignment of the Contract, and to pursue a responsibility review with the selected Proposer should it appear on the Prohibited Entities List hereafter.

XII. ENCOURAGING USE OF NEW YORK STATE BUSINESSES IN CONTRACT PERFORMANCE

New York State businesses have a substantial presence in State contracts and strongly contribute to the economies of the state and the nation. In recognition of their economic activity and leadership in doing business in New York State, Proposers for this Contract for commodities, services or technology are strongly encouraged and expected to consider New York State businesses in the fulfillment of the requirements of the Contract. Such partnering may be as subcontractors, suppliers, protégés or other supporting roles.

Proposers are strongly encouraged, to the maximum extent practical and consistent with legal requirements, to use responsible and responsive New York State businesses in purchasing commodities that are of equal quality and functionality and in utilizing services and technology. Furthermore, Proposers are reminded that they must continue to utilize small, minority and women-owned businesses, consistent with current State law.

Utilizing New York State businesses in State contracts will help create more private sector jobs, rebuild New York's infrastructure, and maximize economic activity to the mutual benefit of the contractor and its New York State business partners. New York State businesses will promote the contractor's optimal performance under the Contract, thereby fully benefiting the public sector programs that are supported by associated procurements.

Public procurements can drive and improve the State's economic engine through promotion of the use of New York businesses by its contractors. The State therefore expects bidders/proposers to provide maximum assistance to New York businesses in their contracts. The potential participation by all kinds of New York businesses will deliver great value to the State and its taxpayers.

Proposers can demonstrate their commitment to the use of New York State businesses by responding to the question below. Each proposer must include a response to this question with their proposal. Please note that a "yes" response requires supporting information. If yes, identify New York State businesses that will be used and attach identifying information.

Will New York State businesses be used in the performance of this contract? _____Yes _____No

EXHIBIT A

SCOPE OF WORK

I. Background and Description of Project Areas

Located at Manhattan's southwestern tip, Battery Park City ("BPC") is a 92-acre land tract built in the 1970's by dredging organic river soils and filling in a portion of the Hudson River with hydraulic sand fill. This fill is laterally retained with a combination of cellular steel sheet piles, crushed quarry stone dike, granular filter materials, timber sheeting bulkhead, and a relieving platform. The Esplanade's relieving platform ("Relieving Platform") is generally 70-feet wide, but ranges from 43-feet to 50-feet in the North and South Cove areas as well as in the North Platform area adjacent to Stuyvesant High School. The Relieving Platform is a concrete platform deck composed of 7 ½ inch thick pre-cast, pre-stressed concrete planks integrated with 7½ inch thick reinforced cast-in-place concrete, spanning between cast-in-place concrete pile-supported bents located approximately 23 feet on center. The supporting piles are 20-inch pre-cast, pre-stressed concrete squares with a design axial capacity of 110 tons. The Relieving Platform's landside edge has a continuous cast-in-place reinforced concrete beam, 3-feet wide by 4 to 4½-feet high, supported by vertical and battered piles. Vertical timber sheeting lines the back (inboard) edge of the Relieving Platform's perimeter. A pre-cast concrete seawall skirt along Battery Park City's western boundary serves to protect the piles, Platform, and bulkhead. The Platform is divided into sections, or "bays," that span between each pile bent. The Platform runs the entire waterside perimeter of Battery Park City and is approximately 7,500 linear feet in length.

Beginning in 2007, BPCA established a multi-year Program of inspection, maintenance, repair, and encapsulation of the concrete piles that support the Relieving Platform. The first six (6) phases (performed between 2007 and 2019) addressed the piles at the Esplanade by the ferry terminal on the north side of North Cove Marina, the Winter Garden, and sections of the southern and northern portions of the Esplanade. The Phase 7 Pile Remediation Project (the "Project" or the "Work") will involve the seventh phase of the Program, and will be performed beneath the Relieving Platform in three (3) distinct areas of the Esplanade (each, together with the approved points of access thereto, a "Project Area," and collectively, the "Project Areas"):

(1) Wagner Park, Bents 1-50, approximately 424 piles ("Project Area 1"); (2) the Esplanade area adjacent to and north of Rector Place, Bents 44-62, approximately 157 piles ("Project Area 2"); and (3) the Esplanade area in Rockefeller Park (just north of the Ferry Terminal), Bents 74-88, approximately 103 piles ("Project Area 3") (each, together with the approved points of access thereto, a "Project Area", and collectively, the "Project Areas"). Maps showing the extents of each Project Area (collectively, the "Phase 7 Project Area Maps") are attached hereto as Exhibit H.

The Phase 7 Project Area Maps, and layout drawings showing the affected piles associated with this Project, are attached hereto as Exhibit H.

II. Project Schedule & Sequencing Parameters

It is anticipated that the term of the contract or contracts awarded pursuant to this RFP (the "Contract" or "Contracts") will be eighteen (18) months, with the Project's construction to be conducted in two (2) phases during the 2020 and 2021 in-water construction seasons. The U.S. Fish & Wildlife permits applicable to the Work allows for in-water construction work to be performed from May 1 through October 31 (the "In-Water Work Season"), with the possibility of a thirty (30) day extension to

November 30 if certain site conditions are met and approval is obtained. Phase 1 of the Work will include as much of Project Area 1 as is feasible to be completed in 2020 – as determined by BPCA after consultation with its construction manager and the selected Proposer following execution of the Contract - and is expected to commence in early September 2020 and be completed by November 30, 2020, assuming a thirty (30) day extension of the normal October 31 deadline of the In-Water Work Season is secured by the selected Proposer. Phase 2 of the Work, comprising all elements of the Work not completed in Phase 1, will commence in May 2021 and be completed by no later than November 30, 2021. Contractors are encouraged to present a schedule that completes the work prior to the end of the 2021 in-water season. The work to be completed during Phases 1 and 2 will need to be coordinated with the South Battery Park City Resiliency Project, as well as other BPCA construction projects that may be concurrently in progress.

III. General Project Requirements

a) The selected Proposer shall provide its own furnished construction trailer spaces, to be located on a barge in the Hudson River for each active Project Area of the Work. On each barge, the selected Proposer shall allocate space comprising no less than one hundred (100) square feet for use by the Project's Construction Manager as separate, furnished, and secured office space. The selected Proposer must provide basic office furnishings for the construction manager space, but is not required to provide computers or other electronic equipment. In addition, the selected Proposer must allocate within each construction trailer sufficient room for a changing area to be utilized by the construction manager's diving personnel and for storage of the construction manager's diving equipment.

b) Prior to commencing the Work in any particular Project Area, the selected Proposer shall prepare for approval by BPCA, an overall site logistics plan for the three (3) Project Areas of the Work, along with detailed layouts and plans for staging, materials storage, batching/pumping, performance of construction work, and security and safety (for the public in accordance with all applicable New York City Department of Buildings regulations) for the particular Project Area within which Work is proposed to be commenced. BPCA's written approval of the Proposer's site logistics plan is required before the selected Proposer is allowed to commence any work in the Project Areas.

c) All barges are to be spudded or anchored in place in a manner designed to minimize localized noise and disturbance. Mooring to the Esplanade structure will not be permitted.

d) It is preferred that all deliveries be made by water. For deliveries required to be made by land, BPCA must be notified with a sufficient amount of lead time (at least twenty-four (24) hours) to allow for necessary security access.

e) Upon the completion of each phase of the Project, the selected Proposer must remove all staging equipment/fencing, and return the Project Areas to their original condition.

f) The selected Proposer is responsible for obtaining all construction permits required for the Work prior to commencement of the Work.

g) The selected Proposer will provide to BPCA as-built drawings for all Project Areas upon final Completion of the Project in the manner specified by BPCA's Standard Form of Contract and the Specifications.

IV. Scope of Marine Construction Services

The selected Proposer shall provide all labor, equipment, tools, materials, and construction services necessary to perform the Work in accordance with the Drawings and Specifications attached as Exhibit G (the "Construction Documents").

The selected Proposer shall perform epoxy and/or cementitious pile encasements, along with various pile repair typologies, in accordance with the Pile Repair Schedule and accompanying details included in the Construction Documents, as further described below.

a) Encasement Work

The selected Proposer shall:

- Excavate two feet (2'), or as deep as possible up to two feet (2'), below the mudline of each identified pile;
- Power wash the entire exposed surface of each pile, including the area of each pile below the mudline as exposed after excavation;
- Install fiberglass reinforced polymer ("FRP") jackets and applicable formwork so that all port holes are located on alternating faces of each pile to maintain a constant tremie;
- Install all FRP jackets pursuant to the product manufacturer's recommendations;
- Fill forms by pumping of an approved underwater epoxy mortar or cementitious grout, per the Construction Documents to the top of the forms as required. The top shall be hand packed with an approved product. The forms shall have a plug installed at the bottom and allowed to cure before the remainder of the pile is filled.
- Clean and prepare the top sections of any installed pile plugs;
- Remove all temporary items including but not limited to all ratchet straps; strongbacks, banding, exterior ports etc. The FRP forms shall remain in place; and
- Backfill the excavated area around each pile so as to restore the pre-construction mudline.

b) Additional Repair Work

Various repair details are provided in the Construction Documents and made applicable to individual piles as referenced in the Pile Repair Schedule therein. In strict accordance with the Pile Repair Schedule, and in coordination with the encasement work as referenced above and in the Construction Documents, the selected Proposer shall perform the specified repair detail, as appropriate, for each identified pile.

c) Inspections, Final Completion and Demobilization

The selected Proposer shall:

- Coordinate with the Construction Manager and the Engineer of Record to accommodate regular inspections of the Work.
- Promptly correct any deficiencies in the Work as identified by the CM and/or the Engineer of Record.
- Once all Work has been completed and approved within a specific Project Area, remove any and all staging equipment in that Project Area, including but not limited to any fencing, and return the Project Area to its pre-construction condition.
- Upon completion and approval of all Work, demobilize from the Project Areas and close out all open permits.

EXHIBIT B

CONTRACTOR REQUIREMENTS AND PROCEDURES FOR PARTICIPATION BY NEW YORK STATE-CERTIFIED MBEs/WBEs/SDVOBs AND EQUAL EMPLOYMENT OPPORTUNITIES FOR MINORITY GROUP MEMBERS AND WOMEN

NOTE REGARDING THIS SOLICITATION:
This solicitation has been granted a waiver of MWBE goals. There will be no MWBE goals assigned to the contract issued pursuant to this solicitation and the requirements for complying with MWBE goals do not apply to this solicitation.

NEW YORK STATE LAW

Pursuant to New York State Executive Law Article 15-A and Parts 140-145 of Title 5 of the New York Codes, Rules and Regulations BPCA is required to promote opportunities for the maximum feasible participation of New York State-certified MBEs/WBEs (collectively, "MWBE(s)") and the employment of minority group members and women in the performance of BPCA contracts. Pursuant to New York State Executive Law Article 17-B and 9 NYCRR §252, BPCA recognizes its obligation under the law to promote opportunities for maximum feasible participation of certified SDVOBs.

Business Participation Opportunities for MWBEs

For purposes of this solicitation, BPCA hereby establishes an overall goal for total MWBE participation of 0% percent based on the current availability of MWBEs. Since no MWBE goals are established for this solicitation, the following language for complying with MWBE goals is not applicable. A contractor ("Contractor") on any contract resulting from this procurement ("Contract") must document its good faith efforts to provide meaningful participation by MWBEs as subcontractors and suppliers in the performance of the Contract. To that end, by submitting a response to this RFP, the Proposer agrees that BPCA may withhold payment pursuant to any Contract awarded as a result of this RFP pending receipt of the required MWBE documentation. The directory of MWBEs can be viewed at: https://ny.newnycontracts.com. For guidance on how BPCA will evaluate a Contractor's "good faith efforts," refer to 5 NYCRR § 142.8.

The Proposer understands that only sums paid to MWBEs for the performance of a commercially useful function, as that term is defined in 5 NYCRR § 140.1, may be applied towards the achievement of the applicable MWBE participation goal. The portion of a contract with an MWBE serving as a supplier that shall be deemed to represent the commercially useful function performed by the MWBE shall be 60 percent of the total value of the contract. The portion of a contract with an MWBE serving as a broker that shall be deemed to represent the commercially useful function performed by the MWBE shall be the monetary value for fees, or the markup percentage, charged by the MWBE.

In accordance with 5 NYCRR § 142.13, the Proposer further acknowledges that if it is found to have willfully and intentionally failed to comply with the MWBE participation goals set forth in a Contract resulting from this RFP, such finding constitutes a breach of contract and BPCA may withhold payment as liquidated damages.

Such liquidated damages shall be calculated as an amount equaling the difference between: (1) all sums identified for payment to MWBEs had the Contractor achieved the contractual MWBE goals; and (2) all sums actually paid to MWBEs for work performed or materials supplied under the Contract.

By submitting a bid or proposal, a Proposer agrees to demonstrate its good faith efforts to achieve the applicable MWBE participation goals by submitting evidence thereof through the New York State Contract System ("NYSCS"), which can be viewed at https://ny.newnycontracts.com, provided, however, that a Proposer may arrange to provide such evidence via a non-electronic method by contacting Mr. Justin McLaughlin-Williams at Justin.McLaughlin-Williams@bpca.ny.gov or 212-417-2337. Please note that the NYSCS is a one-stop solution for all of your

MBE/WBE and Article 15-A contract requirements. For additional information on the use of the NYSCS to meet the Proposer's MBE/WBE requirements, please see the attached MBE/WBE guidance from the New York State Division of Minority and Women's Business Development, "Your MWBE Utilization and Reporting Responsibilities Under Article 15-A.".

Additionally, a Proposer will be required to submit the following documents and information as evidence of compliance with the foregoing:

A. An MWBE Utilization Plan with their bid or proposal. Any modifications or changes to an accepted MWBE Utilization Plan after the Contract award and during the term of the Contract must be reported on a revised MWBE Utilization Plan and submitted to BPCA for review and approval.

B. BPCA will review the submitted MWBE Utilization Plan and advise the Proposer of BPCA acceptance or issue a notice of deficiency within 30 days of receipt.

C. If a notice of deficiency is issued, the Proposer will be required to respond to the notice of deficiency within seven (7) business days of receipt by submitting to Mr. Justin McLaughlin-Williams at BPCA, by email at Justin.McLaughlin-Williams@bpca.ny.gov, a written remedy in response to the notice of deficiency. If the written remedy that is submitted is not timely or is found by BPCA to be inadequate, BPCA shall notify the Proposer and direct the Proposer to submit, within five (5) business days, a request for a partial or total waiver of MWBE participation goals. Failure to file the waiver form in a timely manner may be grounds for disqualification of the bid or proposal.

D. BPCA may disqualify a Proposer as being non-responsive under the following circumstances:

1) If a Proposer fails to submit an MWBE Utilization Plan;

2) If a Proposer fails to submit a written remedy to a notice of deficiency;

3) If a Proposer fails to submit a request for waiver; or

4) If BPCA determines that the Proposer has failed to document good faith efforts.

The successful Proposer will be required to attempt to utilize, in good faith, any MBE or WBE identified within its MWBE Utilization Plan, during the performance of the Contract. Requests for a partial or total waiver of established goal requirements made subsequent to Contract Award may be made at any time during the term of the Contract to BPCA, but must be made no later than prior to the submission of a request for final payment on the Contract.

The successful Proposer will be required to submit a quarterly M/WBE Contractor Compliance & Payment Report to BPCA, by the 10th day following each end of quarter over the term of the Contract documenting the progress made toward achievement of the MWBE goals of the Contract.

Business Participation Opportunities for SDVOBs

For purposes of this solicitation, BPCA hereby establishes an overall goal of 6% for SDVOB participation. A Proposer must document good faith efforts to provide meaningful participation by SDVOBs as subcontractors or suppliers in the performance of the Contract and Proposer agrees that BPCA may withhold payment pending receipt of the required SDVOB documentation. The directory of New York State Certified SDVOBs can be viewed at: http://www.ogs.ny.gov/Core/docs/CertifiedNYS_SDVOB.pdf. For guidance on how BPCA will determine a Contractor's "good faith efforts," refer to 9 NYCRR §252.2(f)(2).

In accordance with 9 NYCRR §252.2(s), the Proposer acknowledges that if it is found to have willfully and intentionally failed to comply with the SDVOB participation goals set forth in the Contract, such finding constitutes a breach of Contract and Contractor shall be liable for damages as specified in the Contract.

Such damages shall be calculated based on the actual cost incurred by BPCA related to BPCA's expenses for personnel, supplies and overhead related to establishing, monitoring and reviewing certified SDVOB programmatic goals.

A. Additionally, a Proposer agrees to submit a Utilization Plan with their bid or Proposal as evidence of compliance with the foregoing. Any modifications or changes to the Utilization Plan after the Contract award and during the term of the Contract must be reported on a revised Utilization Plan and submitted to BPCA.

B. BPCA will review the submitted Utilization Plan and advise the Proposer of BPCA's acceptance or issue a notice of deficiency within 30 days of receipt.

C. If a notice of deficiency is issued, Proposer agrees that it shall respond to the notice of deficiency within seven (7) business days of receipt by submitting to Mr. Justin McLaughlin-Williams at BPCA, by email at Justin.McLaughlin-Williams@bpca.ny.gov, a written remedy in response to the notice of deficiency. If the written remedy that is submitted is not timely or is found by BPCA to be inadequate, BPCA shall notify the Proposer and direct the Proposer to submit, within five (5) business days, a request for a partial or total waiver of SDVOB participation goals. Failure to file the waiver form in a timely manner may be grounds for disqualification of the bid or Proposal.

D. BPCA may disqualify a Proposer as being non-responsive under the following circumstances:

   1) If a Proposer fails to submit a Utilization Plan;

   2) If a Proposer fails to submit a written remedy to a notice of deficiency;

   3) If a Proposer fails to submit a request for waiver; or

   4) If BPCA determines that the Proposer has failed to document good faith efforts.

The successful Proposer shall attempt to utilize, in good faith, any SDVOB identified within its Utilization Plan, during the performance of the Contract. Requests for a partial or total waiver of established goal requirements made subsequent to the Contract award may be made at any time during the term of the Contract to BPCA, but must be made no later than prior to the submission of a request for final payment on the Contract.

The successful Proposer is required to submit a Contractor's SDVOB Contractor Compliance & Payment Report to BPCA on a monthly basis over the term of the Contract documenting the progress made toward achievement of the SDVOB goals of the Contract.

Equal Employment Opportunity (EEO) Requirements

By submission of a bid or proposal in response to this solicitation, the Proposer agrees with all of the terms and conditions of the attached MWBE Equal Employment Opportunity Policy Statement. The Proposer is required to ensure that it and any subcontractors awarded a subcontract for the construction, demolition, replacement, major repair, renovation, planning or design of real property and improvements thereon (the "Work"), except where the Work is for the beneficial use of the Proposer, undertake or continue programs to ensure that minority group members and women are afforded equal employment opportunities without discrimination because of race, creed, color, national origin, sex, age, disability or marital status. For these purposes, equal opportunity shall apply in the areas of recruitment, employment, job assignment, promotion, upgrading, demotion, transfer, layoff, termination, and rates of pay or other forms of compensation. This requirement does not apply to: (i) work, goods, or services unrelated to the Contract; or (ii) employment outside New York State.

The Proposer will be required to submit a Minority and Women-owned Business Enterprise and Equal Employment Opportunity Policy Statement, Form # 4, to BPCA with its bid or proposal.

If awarded a Contract, Proposer shall submit a Workforce Utilization Report and shall require each of its Subcontractors to submit a Workforce Utilization Report, in such format as shall be required by BPCA on a monthly basis during the term of the Contract.

Pursuant to Executive Order #162, contractors and subcontractors will also be required to report the gross wages paid to each of their employees for the work performed by such employees on the contract utilizing the Workforce Utilization Report on a quarterly basis.

Further, pursuant to Article 15 of the Executive Law (the "Human Rights Law"), all other State and Federal statutory and constitutional non-discrimination provisions, the Contractor and sub-contractors will not discriminate against any employee or applicant for employment because of race, creed (religion), color, sex, national origin, sexual orientation, military status, age, disability, predisposing genetic characteristic, marital status or domestic violence victim status, and shall also follow the requirements of the Human Rights Law with regard to non-discrimination on the basis of prior criminal conviction and prior arrest.

Please Note: Failure to comply with the foregoing requirements may result in a finding of non-responsiveness, non-responsibility and/or a breach of the Contract, leading to the withholding of funds, suspension or termination of the Contract or such other actions or enforcement proceedings as allowed by the Contract.

NEW YORK STATE OF OPPORTUNITY | Division of Minority and Women's Business Development

Your MBE/WBE Utilization and Reporting Responsibilities Under Article 15-A

The New York State Contract System ("NYSCS") is your one stop tool compliance with New York State's MBE/WBE Program. It is also the platform New York State uses to monitor state contracts and MBE/WBE participation.

GETTING STARTED

To access the system, please login or create a user name and password at https://ny.newnycontracts.com/FrontEnd/VendorSearchPublic.asp?TN=ny&XID=7562. If you are uncertain whether you already have an account set up or still need to register, please send an email to the customer service contact listed on the Contact Us & Support page, or reach out to Mr. Justin McLaughlin-Williams at Justin.McLaughlin-WIlliams@bpca.ny.gov or 212-417-2337. For verification, in the email, include your business name and contact information.

VENDOR RESPONSIBILITIES

As a vendor conducting business with New York State, you have a responsibility to utilize minority- and/or women-owned businesses in the execution of your contracts, per the MBE/WBE percentage goals stated in your solicitation, incentive proposal or contract documents. NYSCS is the tool that New York State uses to monitor MBE/WBE participation in state contracting. Through the NYSCS you will submit utilization plans, request subcontractors, record payments to subcontractors, and communicate with your project manager throughout the life of your awarded contracts.

There are several reference materials available to assist you in this process, but to access them, you need to first be registered within the NYSCS. Once you log onto the website, click on the **Help & Support >>** link on the lower left hand corner of the Menu Bar to find recorded trainings and manuals on all features of the NYSCS. You may also click on the **Help & Tools** icon at the top right of your screen to find videos tailored to primes and subcontractors. There are also opportunities available to join live trainings, read up on the "Knowledge Base" through the Forum link, and submit feedback to help improve future enhancements to the system. Technical assistance is always available through the **Contact Us & Support** link on the NYSCS website (https://ny.newnycontracts.com/FrontEnd/VendorSearchPublic.asp?TN=ny&XID=7562).

For more information, contact Mr. Justin McLaughlin-Williams at Justin.McLaughlin-WIlliams@bpca.ny.gov or 212-417-2337.

MINORITY AND WOMEN-OWNED BUSINESS ENTERPRISES

EQUAL EMPLOYMENT OPPORTUNITY POLICY STATEMENT

MBE/WBE AND EEO POLICY STATEMENT

I, _____ (the "Contractor"), agree to adopt the following policies with respect to the project being developed at, or services rendered to, the Battery Park City Authority ("BPCA").

MBE/WBE

This organization will and will cause its contractors and subcontractors to take good faith actions to achieve the MBE/WBE contract participations goals set by the State for that area in which the State-funded project is located, by taking the following steps:

(1) Actively and affirmatively soliciting bids for contracts and subcontracts from qualified State certified MBEs or WBEs, including solicitations to MBE/WBE contractor associations.

(2) Requesting a list of State-certified MBEs/WBEs from BPCA and soliciting bids from these MBEs/WBEs directly.

(3) Ensuring that plans, specifications, request for proposals and other documents used to secure bids will be made available in sufficient time for review by prospective MBEs/WBEs.

(4) Where feasible, dividing the work into smaller portions to enhance participations by MBEs/WBEs and encourage the formation of joint venture and other partnerships among MBE/WBE contractors to enhance their participation.

(5) Documenting and maintaining records of bid solicitation, including those to MBEs/WBEs and the results thereof. The Contractor will also maintain records of actions that its subcontractors have taken toward meeting MBE/WBE contract participation goals.

(6) Ensuring that progress payments to MBEs/WBEs are made on a timely basis so that undue financial hardship is avoided, and that bonding and other credit requirements are waived or appropriate alternatives are developed to encourage MBE/WBE participation.

EEO

(a) This organization will not discriminate against any employee or applicant for employment because of race, creed, color, national origin, sex, age, disability or marital status, will undertake or continue existing diversity programs to ensure that minority group members are afforded equal employment opportunities without discrimination, and shall make and document its conscientious and active efforts to employ and utilize minority group members and women in its work force on State contracts.

(b) This organization shall state in all solicitation or advertisements for employees that in the performance of the State contract all qualified applicants will be afforded equal employment opportunities without discrimination because of race, creed, color, national origin, sex disability or marital status.

(c) At the request of BPCA, this organization shall request that each employment agency, labor union, or authorized representative will not discriminate on the basis of race, creed, color, national origin, sex, age, disability or marital status and that such union or representative will affirmatively cooperate in the implementation of this organization's obligations herein.

(d) The Contractor shall comply with the provisions of the Human Rights Law, all other State and Federal statutory and constitutional non-discrimination provisions. The Contractor and subcontractors shall not discriminate against any employee or applicant for employment because of race, creed (religion), color, sex, national origin, sexual orientation, military status, age, disability, predisposing genetic characteristic, marital status or domestic violence victim status, and shall also follow the requirements of the Human Rights Law with regard to non-discrimination on the basis of prior criminal conviction and prior arrest.

(e) This organization will include the provisions of sections (a) through (d) of this agreement in every subcontract in such a manner that the requirements of the subdivisions will be binding upon each subcontractor as to work in connection with the State contract.

Agreed to this _____ day of _____, 20____

By _____

Print: _____ Title: _____

_____ is designated as the Consultant's Minority Business Enterprise Liaison responsible for administering the Minority and Women-Owned Business Enterprises - Equal Employment Opportunity (MBE/WBE - EEO) program.

MBE/WBE Contract Goals

N/A Minority and Women's Business Enterprise Participation

___% Minority Business Enterprise Participation

___% Women's Business Enterprise Participation

EEO Contract Goals (if applicable)

___% Minority Labor Force Participation

___% Female Labor Force Participation

_____
(Authorized Representative)

Title: _____

Date: _____

Diversity Practices Questionnaire

I, _____, as _____ (title) of _____ company (the "Company"), swear and/or affirm under penalty of perjury that the answers submitted to the following questions are complete and accurate to the best of my knowledge:

1. Does your Company have a Chief Diversity Officer or other individual who is tasked with supplier diversity initiatives? Yes or No

If Yes, provide the name, title, description of duties, and evidence of initiatives performed by this individual or individuals.

2. What percentage of your Company's gross revenues (from your prior fiscal year) was paid to New York State certified MBEs/WBEs as subcontractors, suppliers, joint-ventures, partners or other similar arrangement for the provision of goods or services to your Company's clients or customers?

3. What percentage of your Company's overhead (i.e. those expenditures that are not directly related to the provision of goods or services to your Company's clients or customers) or non-contract-related expenses (from your prior fiscal year) was paid to New York State certified MBEs/WBEs as suppliers/contractors?[1]

4. Does your Company provide technical training[2] to MBEs/WBEs? Yes or No

If Yes, provide a description of such training which should include, but not be limited to, the date the program was initiated, the names and the number of MBEs/WBEs participating in such training, the number of years such training has been offered and the number of hours per year for which such training occurs.

5. Is your Company participating in a government approved M/WBE mentor-protégé program?

If Yes, identify the governmental mentoring program in which your Company participates and provide evidence demonstrating the extent of your Company's commitment to the governmental mentoring program.

6. Does your Company include specific quantitative goals for the utilization of MBEs/WBEs in its non-government procurements? Yes or No

If Yes, provide a description of such non-government procurements (including time period, goal, scope and dollar amount) and indicate the percentage of the goals that were attained.

7. Does your Company have a formal M/WBE supplier diversity program? Yes or No

If Yes, provide documentation of program activities and a copy of policy or program materials.

8. Does your Company plan to enter into partnering or subcontracting agreements with New York State certified MBEs/WBEs if selected as the successful Proposer? Yes or No

If Yes, complete the attached Utilization Plan

[1] Do not include onsite project overhead.

[2] Technical training is the process of teaching employees how to more accurately and thoroughly perform the technical components of their jobs. Training can include technology applications, products, sales and service tactics, and more. Technical skills are job-specific as opposed to soft skills, which are transferable.

All information provided in connection with the Diversity Practices Questionnaire is subject to audit, and any fraudulent statements are subject to criminal prosecution and debarment.

Signature of Owner/Official _____

Printed Name of Signatory _____

Title _____

Name of Business _____

Address _____

City, State, Zip _____

STATE OF _____

COUNTY OF) ss:

On the _____ day of _____, 20___, before me, the undersigned, a Notary Public in and for the State of _____, personally appeared _____, personally known to me or proved to me on the basis of satisfactory evidence to be the individual whose name is subscribed to this certification and said person executed this instrument.

_____
Notary Public

EXHIBIT C

BPCA STANDARD FORM OF CONTRACT

(attached)

CONSULTANT AGREEMENT

between

HUGH L. CAREY BATTERY PARK CITY AUTHORITY

and

[CONSULTANT]

Dated as of _____

Contract No. [CONTRACT #]

([PROJECT NAME])

TABLE OF CONTENTS

1. SCOPE OF WORK....1
2. TIME FOR PERFORMANCE....1
3. COMPENSATION....1
4. INCREASE AND DECREASE IN THE SCOPE OF CONSULTANT'S WORK....2
5. CONSULTANT COOPERATION....3
6. TERMINATION....3
7. SUSPENSION....5
8. ASSIGNMENT....5
9. OWNERSHIP OF DOCUMENTS....5
10. INSURANCE....6
11. AUTHORITY OF OWNER....9
12. ENTIRE AGREEMENT....9
13. CONSULTANT AS INDEPENDENT CONTRACTOR....9
14. MAINTENANCE, AUDIT AND EXAMINATION OF ACCOUNTS....9
15. ACCEPTANCE OF FINAL PAYMENT; RELEASE AND DISCHARGE....9
16. COVENANTS, REPRESENTATIONS AND WARRANTIES....10
17. INDEMNITY....11
18. CONFIDENTIALITY....11
19. MODIFICATION....12
20. WAIVER....12
21. SEVERABILITY....12
22. NEW YORK LAW/FORUM SELECTION/JURISDICTION....12
23. PROVISIONS REQUIRED BY LAW....12
24. NOTICES....12
25. APPROVAL AND USE OF SUBCONSULTANTS....13
26. EMPLOYMENT AND DIVERSITY....13
    26.1 *PARTICIPATION BY MINORITY AND WOMEN-OWNED BUSINESS ENTERPRISES*....13
    26.2 *PARTICIPATION BY SERVICE-DISABLED VETERAN-OWNED BUSINESSES*....18
27. RESPONSIBILITY....21
28. INTEREST OF OTHERS....22
29. EXECUTORY CONTRACT....22

30. PARTICIPATION IN INTERNATIONAL BOYCOTT PROHIBITED 22
31. MACBRIDE FAIR EMPLOYMENT PRINCIPLES 22
32. LIMITATION PERIODS 22
33. IRAN DIVESTMENT ACT 23
34. TERMINATION FOR FAILURE TO DISCLOSE UNDER NYS FINANCE LAW §139K.....23
35. COMPTROLLER'S APPROVAL.....23
36. BINDING CONTRACT 23
37. COUNTERPARTS 23
38. SECTION HEADINGS 23
39. SUBORDINATION OF TERMS IN THE EXHIBITS 24

EXHIBIT A - SCOPE OF WORK

EXHIBIT B - RATES **[if applicable]**

EXHIBIT C - FORM OF TIME SHEET **[if applicable]**

EXHIBIT D - MBWE AND EEO POLICY STATEMENT

CONSULTANT AGREEMENT

AGREEMENT (the "Agreement") made as of _____ by and between BATTERY PARK CITY AUTHORITY d/b/a HUGH L. CAREY BATTERY PARK CITY AUTHORITY, (the "Owner"), a body corporate and politic, constituting a public benefit corporation, having a place of business at 200 Liberty Street, 24th Floor, New York, New York 10281, and **[COMPANY],** formed under the laws of the State of **[INCORP. STATE]**, having an office at **[CITY, STATE AND ZIP]** (the "Consultant").

W I T N E S S E T H:

WHEREAS, Owner has fee title to certain real property located in the City, County and State of New York, generally known as Battery Park City; and

WHEREAS, Owner has developed Battery Park City, in individual parcels, with the goal of creating a richly diversified mixed use community providing residential and commercial space with related amenities such as parks, plazas, recreational areas and a waterfront esplanade; and

WHEREAS, Owner intends to retain the services of Consultant to perform **[describe services to be performed]** (the "Project"), and Consultant desires to perform such services for Owner.

NOW, THEREFORE, in consideration of the mutual promises herein contained, the parties hereby agree as follows:

1. Scope of Work

Consultant shall perform the services described in the Scope of Work attached hereto as Exhibit A (the "Work"). All Work shall be completed in accordance with the requirements furnished to Consultant by Owner, and shall be completed to Owner's satisfaction.

2. Time for Performance

Consultant shall perform the Work as expeditiously as is consistent with professional skill and the orderly progress of the Work, and in accordance with any schedule set forth in the attached Scope of Work. If a schedule approved by Owner is incorporated into this Agreement, said schedule shall not be exceeded by Consultant, except for reasonable cause. The term of this Agreement shall begin **[DATE TERM BEGINS]** (the "Commencement Date") and shall terminate not later than **[DATE TERM ENDS]** (the "Expiration Date") (such period from the Commencement Date to the Expiration Date is referred to herein as the "Term") unless this Agreement is otherwise terminated as hereinafter provided. Consultant shall complete the Scope of Work on or before **[DATE]**, unless the time for performance of the Work is extended by written agreement of Consultant and Owner.

3. Compensation

(a) Owner shall pay, and Consultant agrees to accept as full compensation for all Work performed under this Agreement, the not-to-exceed amount of **[$$$$$]** (the "Fee"), paid in

accordance with the rates (the "Rates") attached hereto as Exhibit B. The Fee includes any and all reimbursable expenses, which shall not exceed **[$$$$$]** (the "Reimbursable Amount"), incurred by Consultant in performing the Work.

(b) Any reimbursable expenses shall be paid in accordance with Owner's standard policies for reasonable expenses actually incurred by Consultant in connection with the performance of the Work. Consultant shall submit copies of receipts or other supporting documentation for any qualifying expenses incurred.

(c) Consultant shall submit monthly requests for payment to Owner that shall:

(i) include the name, address, and telephone number of Consultant;

(ii) be accompanied by time sheets, in substantially the form provided in Exhibit C ("Form of Time Sheet"), attached hereto and made part hereof, containing a description of the work performed and indicating hours worked in each billing category; and

(iii) reference the project for which services were rendered.

(d) Owner shall pay Consultant no later than the 30th calendar day (excluding holidays) following Owner's receipt of a Proper Invoice (pursuant to, and as such term is defined in Owner's Prompt Payment Policy, a copy of which can be found at http://bpca.ny.gov/wp-content/uploads/2018/01/BPCA-Prompt-Payment-Policy-Fiscal-Year-2017.pdf). Any item(s) of Work indicated in any Exhibit hereto as attributable to a specific phase of the Work that is not performed during the specified phase shall not be compensated by Owner, but payment for any such items of Work shall remain available to Consultant if, with Owner's advance approval, such Work is actually performed during a subsequent phase of the Work, subject to the provisions of this Article 3 and Owner's approval of any request for payment. Owner may withhold from any payment an amount equal to any costs or damages incurred by Owner as a result of Consultant's negligence or breach of this Agreement.

(e) All requests for payment should be addressed as follows:

Office of the Treasurer
Battery Park City Authority
d/b/a Hugh L. Carey Battery Park City Authority
200 Liberty Street, 24th Floor
New York, NY 10281-1097
Attn.: Accounts Payable

A duplicate copy is to be sent to the attention of **[PROJECT MANAGER, TITLE]**.

4. Increase and Decrease in the Scope of Consultant's Work

Owner shall have the right to make changes to, increase or reduce the scope of Work, or extend the Term or any date set forth in the schedule referenced in Section 2 *supra*, at any time and for any reason, upon written notice to Consultant specifying the nature and extent of such changes. If Consultant believes that any work it has been directed to perform by Owner is beyond

the scope of Work set forth in this Agreement and constitutes extra work, Consultant shall so notify Owner within ten (10) business days. Owner shall determine whether or not such work is in fact beyond the scope of the Work and is considered extra work. If Owner determines that such work constitutes extra work to Consultant or any Subconsultant (as defined in Section 25 of this Agreement), Owner will pay Consultant any additional reimbursable expenses approved pursuant to Owner's policy for reimbursable expenses, and such additional compensation only as mutually agreed in writing by Owner and Consultant at the time of such change.

5. Consultant Cooperation

(a) Consultant shall work with such firms or individuals as Owner shall designate from time to time in connection with the Work, and agrees to meet with such firms or individuals at such times as Owner may require in order to maintain an ongoing review process so as to expedite determinations and approvals required to be made in connection with the Work.

(b) Consultant shall render any assistance that Owner may require with respect to any claim or action arising from or in any way relating to Consultant's services during or subsequent to the Term of this Agreement, including, but not limited to, review of claims, preparation of technical reports and participation in negotiations, both before and after Consultant has completed performance of the Work under this Agreement and without any additional compensation therefor.

6. Termination

(a) *Termination for Convenience*. Owner, at any time, may terminate this Agreement in whole or in part. Any such termination shall be effected by mailing or delivering to Consultant a written notice of termination specifying the extent to which performance of the Work under this Agreement is terminated and the date upon which such termination becomes effective. Upon receipt of the notice of termination, Consultant shall act promptly to minimize any expenses resulting from said termination. Owner shall pay Consultant the costs actually incurred by Consultant, including any Fee for Work actually and satisfactorily performed up to the effective date of the termination, but in no event shall Consultant be entitled to compensation in excess of the total consideration of this Agreement. In the event of such a termination, Owner may take over the Work and prosecute same to completion by contract or otherwise, and may take possession of and utilize such work product, materials, appliances, and plant as may be on the site and necessary or useful to complete the Work. Except as otherwise provided herein, all of Owner's liability hereunder shall cease and terminate as of the effective date specified in such notice of termination.

(b) *Termination for Cause*. Owner may terminate this Agreement for cause if:

(i) Consultant shall fail to diligently, timely and expeditiously perform any of its obligations as set forth in the Agreement;

(ii) Any representation or warranty made or deemed to have been made under this Agreement by Consultant shall prove to be untrue in any material respect;

(iii) Consultant shall make a general assignment for the benefit of its creditors, or a receiver or trustee shall have been appointed on account of Consultant's insolvency, or Consultant otherwise shall be or become insolvent, or an order for relief shall have been entered

against Consultant under Chapter 7 or Chapter 11 of Title 11 of the United States Code;

(iv) a breach of any covenant or agreement contained in Section 16 of this Agreement or any other section of this Agreement shall occur; or

(v) Consultant otherwise shall be in default hereunder;

by serving written notice upon Consultant of Owner's intention to terminate this Agreement. Such notice shall state: (1) the reason(s) for Owner's intention to terminate the Agreement, and (2) the effective date of termination, to be not less than three (3) calendar days after the date of the notice of termination. If Consultant shall fail to cure the reason(s) for termination or make arrangements satisfactory to Owner on or before the effective date of termination, this Agreement shall terminate on the date specified by Owner in the notice of termination. In the event of any such termination, Owner may take over the Work and prosecute same to completion by contract or otherwise, for the account and at the expense of Consultant, and Consultant shall be liable to Owner for all costs incurred by Owner by reason of said termination. In the event of such termination, Owner may take possession of and utilize such work product, materials, appliances, and plant as may be on the site and necessary or useful to complete the Work. Upon Owner's completion of the Work following a termination for cause, Consultant shall be entitled to such amount of the Fee that has not theretofore been paid to Consultant and that shall compensate Consultant for all Work actually and satisfactorily performed by it up to the date of termination, provided, however, that Owner shall deduct from any amount all additional costs and expenses that Owner may incur over those which Owner would have incurred in connection with the Work if Owner had not so terminated this Agreement for cause. Nothing contained in this Agreement shall limit in any manner any and all rights or remedies otherwise available to Owner by reason of a default by Consultant under this Agreement, including, without limitation, the right to seek full reimbursement from Consultant for all costs and expenses incurred by Owner by reasons of Consultant's default hereunder and which Owner would not have otherwise incurred if Consultant had not defaulted hereunder.

(c) Upon any termination of this Agreement in accordance with the provisions of this Section 6, Consultant shall, with respect to the Work which is the subject of such termination:

(i) discontinue all its services from and after the date of the notice of termination, except to attempt to cure any reason(s) for termination or as may be required to complete any item or portion or services to a point where discontinuance will not cause unnecessary waste of duplicative work or cost;

(ii) cancel, or if so directed by Owner, transfer to Owner all commitments and agreements made by Consultant relating to the Work, to the extent same are cancelable or transferable by Consultant;

(iii) transfer to Owner in the manner, to the extent, and at the time directed by Owner, all work product, supplies, materials and other property produced as a part of, or acquired in the performance of the Work; and

(iv) take other actions as Owner may reasonably direct.

(d) In the event that Consultant, having been terminated, thereafter obtains a

determination, in a judicial or other action or proceeding, that such termination was unwarranted, without basis, or invalid for any reason, then the termination shall be deemed to have been one for the convenience of Owner and Consultant shall be entitled to be reimbursed and paid as provided in Subsection 6(b) but to no other payments or damages.

7. Suspension

Owner may, at any time and for any reason, order Consultant in writing to suspend, delay or interrupt performance of all or any part of the Work for a reasonable period of time as the Owner may determine. Upon receipt of a suspension order, Consultant shall, as soon as practicable, cease performance of the Work as ordered and take immediate affirmative measures to protect such Work from loss or damage. Consultant specifically agrees that such suspension, delay or interruption of the performance of Work pursuant to this Section 7 shall not increase the cost of performance of the Work of this Agreement. Owner may extend the Term or any date set forth in schedule referenced in Section 2 *supra*, to compensate Consultant for lost time due to suspension, delay or interruption, and such time extension shall be Consultant's sole compensation for same. Consultant shall resume performance of such Work upon the date ordered by Owner.

8. Assignment

Consultant shall not assign the Agreement in whole or in part without Owner's prior written consent; however, Owner may assign the Agreement in whole or in part without Consultant's prior written consent.

9. Ownership of Documents

(a) All material specifically prepared for the Project and excluding any intellectual property already owned by Consultant that is furnished by Consultant or any Subconsultants (including but not limited to all film, video, or digital assets, Hypertext Markup Language ("HTML") files, JavaScript files, flash files, etc.) in connection with the Work shall be deemed Works Made for Hire and become the sole property of Owner. Consultant shall provide a tangible copy of the Work to Owner in any form(s) to be specified by Owner. Such materials may be used by Owner, in whole or in part, or in modified form, for any and all purposes Owner may deem desirable without further employment of, or payment of any additional compensation to Consultant. Consultant hereby acknowledges that whatever participation Consultant has, or will have, in connection with any copyrightable subject matter that is the subject of the Work is and shall be deemed Work Made for Hire on behalf of the Owner and that the Owner shall be the sole owner of the Work, and all underlying rights therein, worldwide and in perpetuity. In the event that the Work, or any portion thereof, does not qualify or is deemed not to be Work Made for Hire, Consultant hereby irrevocably transfers and assigns to the Owner all of Consultant's right, title and interest, throughout the world, in and to the Work, including, without limitation, all of Consultant's right, title and interest in the copyrights to the Work, including the unrestricted right to make modifications, adaptations and revisions to the Work and hereby waives any so-called "moral rights" with respect to the Work. Consultant grants to Owner a royalty free, worldwide perpetual, irrevocable, nonexclusive license to reproduce, modify, and publicly display the Work.

(b) Any plans, drawings, or specifications prepared by or on behalf of Consultant for

the Project shall become property of Owner, and Consultant may not use same for any purpose not relating to the Project without Owner's prior written consent. Consultant may retain such reproductions of plans, drawings or specifications as Consultant may reasonably require. Upon completion of the Work or the termination of this Agreement, Consultant shall promptly furnish Owner with a complete set of original record prints. All such original materials shall become property of Owner who may use them, without Consultant's permission, for any proper purpose including but not limited to additions or completion of the Project.

10. Insurance

(a) Consultant shall procure and maintain all of the insurance required under this Section 10 during the Term of this Agreement, except with respect to Completed Operations coverage, as described in Section 10(g) below.

(b) Consultant shall not commence performance of the Work until Consultant has obtained, and required each Subconsultant to obtain, all the insurance required under this Section 10 and until it has furnished to Owner the certificate or certificates of insurance required by Section 10(c) hereof.

(c) Consultant shall furnish to Owner, before or upon execution of this Agreement, attention: **[name]**, a certificate or certificates of the insurance required under this Section 10 and, upon Owner's request, certified copies of the original policies of insurance, within the time period required by Owner and before commencing performance of the Work. Such certificate or certificates shall be in form satisfactory to Owner, shall list the various coverages and shall contain, in addition to any other provisions required hereby, a provision that the policy shall not be changed, canceled or reduced and that it shall be automatically renewed upon expiration and continued in force until two years after the Work is completed unless Owner is given 90 days' written notice to the contrary. Such certificates shall also include riders providing that violation of any of the terms of any policy shall not by itself invalidate such policy. Such policies and certificates must name as additional insureds Owner, Battery Park City Parks Conservancy Corporation ("BPCPC") and the State of New York.

(d) All insurance required to be procured and maintained must be procured from insurance companies that have a financial rating by A.M. Best Company as published in the most current key rating guide of A-:VII or better and which are authorized to do business in the State of New York.

(e) If at any time any of the required insurance policies should be canceled, terminated or modified so that insurance is not in effect as required, then Consultant shall suspend performance of the Work. If the Work is suspended then Owner may, at Owner's option, obtain insurance affording coverage equal to that required herein and the cost of such insurance shall be payable by Consultant to Owner.

(f) All additional insured protection afforded Owner, BPCPC, and the State of New York must be on a primary and non-contributory basis and all policies must include a waiver of subrogation in favor of Owner, BPCPC, and the State of New York.

(g) Consultant and Subconsultants shall secure in a form satisfactory to Owner the following:

(i) Worker's Compensation, Employer's Liability insurance (including United States Longshoreman & Harbor Workers and Jones Act coverages) and Disability Benefits during the Term for the benefit of such employees as are required to be insured by the applicable provisions of law and voluntary compensation for employees excluded from statutory benefits.

(ii) Commercial General Liability insurance, as follows:

(A) Coverage must be written on ISO Form CG 00 001 or its equivalent and with no modification to the contractual liability coverage provided therein, and shall be provided on an occurrence basis with limits not less than:

- $1,000,000 per occurrence
- $2,000,000 General Aggregate, which must apply on a per project basis
- $2,000,000 Products/Completed Operations aggregate

(B) Owner, BPCPC and the State of New York must be protected as additional insureds with coverage at least as broad as the combination of the most recent editions of ISO Forms CG 20 26 and CG 20 37 on policies held by the Consultant and any of its Subconsultants. Subconsultants may not use blanket additional insured endorsements to provide additional insured protection to Owner, BPCPC, and the State of New York "by written contract" but must use ISO Form CG 20 38 or its equivalent. The policy must provide coverage for defense and indemnification of claims and/or lawsuits, including third party actions, claims and/or lawsuits for bodily injury to the employees of Consultant or Subconsultants arising from the injured worker's employment with the Consultant or any of its Subconsultants

(C) Consultant and any of its Subconsultants must maintain Products/Completed Operations coverage for no less than three years after the Work is completed and continue to include Additional Insured protection for Owner, BPCPC & the State of New York for the prescribed timeframe and coverage shall contain, in addition to any other provisions required hereby, a provision that the policy shall not be changed, canceled or reduced. As a condition precedent to the making of final payment, Consultant shall furnish Owner with a then current certificate of insurance that confirms the Completed Operations coverage is in effect.

(D) When providing evidence of this insurance the Consultant and any of its Subconsultants must include a completed Acord 855 NY form.

(iii) Automobile Liability insurance covering the use in connection with the Work of all owned, non-owned and hired vehicles. The coverage must protect Owner, BPCPC, and the State of New York as additional insureds under such policy and shall not be less than a $1,000,000 Combined Single Limit

(iv) Professional Liability ("Errors and Omissions") insurance must be maintained at a limit of not less than $1,000,000 per claim.

(v) Data Breach and Privacy/Cyber Liability Insurance including coverage for

failure to protect confidential information and failure of the security of Consultant's computer systems or Owner's/BPCPC's systems due to the actions of Consultant which results in unauthorized access to Owner's and/or BPCPC's data. The limit applicable to this policy shall be no less than $1,000,000 per occurrence, and must apply to incidents related to the cyber theft of Owner's and BPCPC's property, including but not limited to, money and securities. Owner, BPCPC, and the State of New York must be protected as additional insureds on policies held by Consultant and any of its Subconsultants.

(vi) Technology Errors and Omissions insurance with a limit of not less $1,000,000 for damages arising from computer-related services including, but not limited to, the following:

- Consulting;
- Data processing;
- Programming;
- System integration;
- Hardware or software development;
- Installation;
- Distribution or maintenance;
- Systems analysis or design;
- Training; and
- Staffing or other support services.

The policy shall include coverage for third party fidelity including cyber theft and protect Owner, BPCPC, and the State of New York as additional insureds.

(vii) Valuable Papers insurance insuring, for the benefit of Consultant and Owner, all plans, designs, drawings, specifications, and documents used under this Agreement by Consultant in a total amount of not less than **[amount]**. Consultant may furnish full coverage under one policy, or may submit separate policies from any Subconsultant(s) for their proportionate shares of such coverage.

(viii) Comprehensive Crime/Employee Dishonesty insurance in a reasonable amount or an amount which is customary in the applicable industry, trade or profession. Coverage must extend to Third Parties.

(ix) Umbrella Liability insurance in an amount of not less than [amount]. Owner, BPCPC, and the State of New York must be protected as additional insureds on policies held by the Consultant and any of its Subconsultants.

(h) The insurance required under subsections 10(g)(ii) and (iii) shall provide that the insurance company or an attorney approved and retained by the insurance company shall defend any suit or proceeding against Owner or any officers, agents or employees of Owner whether or not such suit is groundless, false or fraudulent. Notwithstanding the foregoing, Owner shall have the right to engage its own attorneys for the purpose of defending any suit or proceeding against it or its respective officers, agents or employees, and, in such event, Consultant shall, indemnify Owner for all attorneys' fees and disbursements and other costs incurred by it arising out of, or incurred in connection with, any such defense.

(i) Owner, at Owner's cost and expense, may, at its sole option, procure and maintain such insurance as shall in the opinion of Owner, protect Owner from contingent liability of Owner to others for damages arising from bodily injury, including death and property damages which may arise from operations under this Agreement. The procurement and maintenance of such insurance by Owner shall not in any way be construed or be deemed to relieve Consultant from, or to be a limitation on the nature or extent of, such obligations and risk.

11. Authority of Owner

The Work shall be subject to the general supervision, direction, control and approval of Owner or its authorized representative(s), whose decision shall be final and binding upon Consultant as to all matters arising in connection with or relating to this Agreement. Owner shall determine all matters relative to the fulfillment of this Agreement on the part of Consultant and such determination shall be final and binding on Consultant.

12. Entire Agreement

This Agreement, including all Exhibits hereto, constitutes the entire Agreement between Owner and Consultant, and any prior agreements or understandings between Owner and Consultant with respect to any portion of the Work are hereby merged into and with this Agreement.

13. Consultant as Independent Contractor

Notwithstanding any other provision of this Agreement, Consultant's status shall be that of an independent contractor and not that of a servant, agent or employee of Owner. Accordingly, Consultant shall not hold itself out as, nor claim to be acting in the capacity of, an officer, agent, employee or servant of Owner.

14. Maintenance, Audit and Examination of Accounts

Consultant shall, until the earlier of six (6) years after completion of the performance of the Work or six (6) years after termination of this Agreement, maintain, and require all Subconsultants to maintain, complete and correct books and records relating to all aspects of Consultant's obligations hereunder, including without limitation, accurate cost and accounting records specifically identifying the costs incurred in performing their respective obligations, and shall make such books and records available to Owner or its authorized representatives for review and audit at all such reasonable times as Owner may request. In the event that Consultant and/or any Subconsultants shall fail to comply with the provisions of this Section 14, and as a result thereof shall be unable to provide reasonable evidence of such compliance, Owner shall not be required to pay any portion of the Fee and Reimbursable Expenses then due or next becoming due, as the case may be, with respect to such items, and if such compensation has already been paid, Owner may require Consultant to refund any such payment made. Any excessive audit costs incurred by Owner due to Consultant's or any Subconsultant's failure to maintain adequate records shall be borne by Consultant.

15. Acceptance of Final Payment; Release and Discharge

Final payment shall be made to Consultant upon satisfactory completion and acceptance by Owner of the Work required under this Agreement, or all Work performed prior to the termination of this Agreement if terminated pursuant to Section 6 hereof, and upon submission of a certification that all Subconsultants have been paid their full and agreed compensation. The acceptance by Consultant of the final payment under this Agreement, or any final payment due upon termination of this Agreement under Section 6 hereof, shall constitute a full and complete waiver and release of Owner from any and all claims, demands and causes of action whatsoever that Consultant, and/or it successors and assigns have, or may have, against Owner under the provisions of this Agreement, unless a detailed and verified statement of claim is served upon Owner prior to the date final payment is tendered by Owner. It is expressly understood and agreed that Owner's or Consultant's termination of this Agreement pursuant to Section 6 hereof shall not give rise to any claim against Owner for damages, compensation or otherwise as a result of such termination, and that under such circumstances Owner's liability to make payments to Consultant on account of any and all Work shall be limited to the payments set forth in Section 6 hereof.

16. <u>Covenants, Representations and Warranties</u>

(a) Consultant represents and warrants to Owner that:

(i) no public official is directly or indirectly interested in this Agreement, or in the supplies, materials, equipment, work, labor or services to which it relates or in any of the profits thereof;

(ii) except as set forth in this Agreement, Consultant has, and shall have, no interest, direct or indirect, in the Project to which the Work relates; and

(iii) to the best of its knowledge, upon due inquiry, no officer, member, partner or employee of Consultant has, prior to the date of this Agreement, been called before a grand jury, head of a state agency, head of a city department or other city agency to testify in an investigation concerning any transaction or contract had with the State of New York, any political subdivision thereof, a public authority, or with any public department, agency or official of the State of New York of or any political subdivision thereof, and refused to sign a waiver of immunity against subsequent criminal prosecution or to answer any relevant question concerning such transaction or contract.

(b) Consultant covenants and agrees that:

(i) recognizing that time for completion of the Work is of the essence, Consultant shall perform all of its obligations hereunder in a prompt and workmanlike manner and in accordance with the time periods for the Work set forth herein;

(ii) the personnel assigned and any Subconsultant(s) used by Consultant in the performance of the Work hereunder shall be qualified in all respects for such assignment, employment and use;

(iii) Consultant, in the performance of the Work, shall utilize the most efficient available methodology and technology for the purpose of reducing the cost and time of such performance;

(iv) Consultant shall comply with the provisions of all Federal, State and local statutes, laws, rules, ordinances and regulations that are applicable to the performance of this Agreement;

(v) should any claim be made or any action be brought against the Owner that is in any way related to the Work, Consultant shall diligently render to Owner any and all assistance specified in Section 5 of this Agreement that may be required by Owner as a result thereof; and

(vi) Consultant shall not commit its personnel to, nor engage in, any other projects during the term of this Agreement to the extent that such projects may adversely affect the quality or efficiency of the Work or would otherwise be detrimental to the conduct and completion of the Work, and Consultant shall provide sufficient numbers of qualified personnel as shall be required to perform the Work in the time requested by Owner. Consultant shall comply with any reasonable request by Owner to remove and/or replace any of Consultant's personnel from the Project.

(c) The parties make mutual representations that to the best of their knowledge that any materials provided by either party for inclusion in the Work shall not infringe upon the copyright or trademark of any third party.

17. Indemnity

To the fullest extent allowed by law:

(a) Consultant shall be liable to, and shall indemnify Owner, each Member, officer, agent and employee of Owner for, and shall hold each of the foregoing harmless from and against, any and all claims, losses, damages, expense, penalties, costs or other liabilities, including, without limitation, attorneys' fees, costs, disbursements and interest, arising out of the performance of the Work or Consultant's breach of this Agreement, including but not limited to any of the provisions set forth in Section 16 hereof, and Consultant agrees that it shall defend any suit or action brought against Owner or any Member, officer, agent or employees of Owner that is based on any loss or liability or alleged loss or liability indemnified herein.

(b) Consultant shall be liable to, and shall indemnify Owner and each of the Members, officers, agents and employees of Owner for, and shall hold each of the foregoing harmless from and against, any and all claims made against any of the foregoing for infringement of any copyright, trademark or patent arising out of the use of any plans, designs and specifications furnished by Consultant in the performance of this Agreement.

18. Confidentiality

Consultant hereby agrees that data, recommendations, reports and other materials developed in the course of the Work are strictly confidential between Consultant and Owner and except as specifically provided herein, Consultant may not at any time reveal or disclose such data, recommendations or reports in whole or in part to any third party without first obtaining written approval from Owner.

19. Modification

No modification, amendment, change, termination or attempted waiver of any of the provisions of this Agreement shall be binding unless in writing and signed by the party to be bound.

20. Waiver

Except as otherwise provided in Section 15 of this Agreement, the parties may waive any of their rights hereunder without invalidating this Agreement or waiving any other rights hereunder, provided, however, that no waiver of, or failure to enforce or exercise any provision of this Agreement shall affect the right of any party thereafter to enforce such provisions or to exercise any right or remedy in the event of any other breach or default, whether or not similar.

21. Severability

If any term or provision of this Agreement or the application thereof to any person or entity, or circumstance shall, to any extent, be determined to be invalid or unenforceable, the remaining provisions of this Agreement, or the application of such terms or provisions to persons, entities or circumstances other than those as to which it is held to be invalid or unenforceable, shall in no way be affected thereby and each term or provision of this Agreement shall be valid and binding upon the parties, and enforced to the fullest extent permitted by law.

22. New York Law/Forum Selection/Jurisdiction

This Agreement shall be construed under, and be governed by, the laws of the State of New York. All actions or proceedings relating, directly or indirectly, to this Agreement shall be litigated only in courts located within the County of New York. Consultant, any guarantor of the performance of its obligations hereunder ("Guarantor") and their successors and assigns hereby subject themselves to the jurisdiction of any state or federal court located within such county, waive the personal service of any process upon them in any action or proceeding therein and consent that such process be served by certified or registered mail, return receipt requested, directed to the Consultant and any successor at Consultant's address hereinabove set forth, to Guarantor and any successor at the address set forth in the instrument of guaranty, and to any assignee at the address set forth in the instrument of assignment. Such service shall be deemed made two days after such process is so mailed.

23. Provisions Required by Law

Each and every provision of law and clause required by law to be included in this Agreement shall be deemed to be included herein, and this Agreement shall read and shall be enforced as though such provision(s) and/or clause(s) were so included.

24. Notices

Any notice, approval, consent, acceptance, request, bill, demand or statement required or permitted to be given hereunder (a "Notice") from either party to the other shall be in writing and shall be deemed given when received by overnight mail or when deposited with the United States Postal Service in a postage prepaid envelope, certified or registered mail, addressed to the other

party at the addresses set forth above. If to Owner, Notices shall be sent to the attention of **[HEAD OF DEPARTMENT]**, with copies to the **[the General Counsel]** and if to Consultant, Notices shall be sent to the attention of **[NAME]**, **[TITLE]**. Either party may at any time change such address or add additional parties to receive a Notice by mailing, as aforesaid, to the other party a Notice thereof.

25. Approval and Use of Subconsultants

(a) Except as specifically provided herein, Consultant shall not employ, contract with or use the services of any consultants, contractors or other third parties (collectively, "Subconsultants") in connection with the performance of its obligations hereunder without the prior written consent of Owner to the use of each such Subconsultant, and to the agreement to be entered into between Consultant and any such Subconsultant. Consultant shall inform Owner in writing of any interest it may have in a proposed Subconsultant. No such consent by Owner, or employment, contract, or use by Consultant, shall relieve Consultant of any of its obligations hereunder.

(b) Consultant shall be responsible for the performance of the Work of any Subconsultants engaged, including the maintenance of schedules, coordination of their Work and resolutions of all differences between or among Consultant and any Subconsultants. It is expressly understood and agreed that any and all Subconsultants engaged by Consultant hereunder shall at all times be deemed engaged by Consultant and not by Owner.

(c) The fees of any Subconsultant retained by Consultant to perform any part of the Work required under this Agreement shall be deemed covered by the compensation stipulated in Section 3 above. Consultant shall pay its Subconsultants in full the amount due them from the proportionate share of each requisition for payment submitted by Consultant and paid by Owner. Consultant shall make payment to its Subconsultants no later than seven (7) calendar days after receipt of payment from Owner. Consultant shall indemnify, defend and hold Owner harmless with respect to any claims against Owner based upon Consultant's alleged failure to make payments to Subconsultants for Work under this Agreement.

(d) Upon the request of Owner, Consultant shall cause any Subconsultant employed by the Consultant in connection with this Agreement to execute a copy of this Agreement, wherein such Subconsultant shall acknowledge that it has read and is fully familiar with the terms and provisions hereof and agrees to be bound thereby as such terms and provisions are or may be applicable to such Subconsultants.

26. Employment and Diversity

26.1 *Participation by Minority and Women-Owned Business Enterprises*

(a) General Provisions

(i) Owner is required to implement the provisions of New York State Executive Law Article 15-A and Parts 140-145 of Title 5 of the New York Codes, Rules and Regulations ("NYCRR") for all contracts, as defined therein, with a value (1) in excess of $25,000 for labor,

services, equipment, materials, or any combination of the foregoing or (2) in excess of $100,000 for real property renovations and construction.

(ii) Consultant agrees, in addition to any other nondiscrimination provision herein and at no additional cost to Owner, to fully comply and cooperate with Owner in the implementation of New York State Executive Law Article 15-A and the regulations promulgated thereunder. These requirements include equal employment opportunities for minority group members and women ("EEO") and contracting opportunities for New York State-certified minority and women-owned business enterprises ("MWBEs"). Consultant's demonstration of "good faith efforts" pursuant to 5 NYCRR § 142.8 shall be a part of these requirements. These provisions shall be deemed supplementary to, and not in lieu of, the nondiscrimination provisions required by New York State Executive Law Article 15 (the "Human Rights Law") and other applicable federal, state, and local laws.

(iii) Failure to comply with all of the requirements herein may result in a finding of non-responsiveness, non-responsibility and/or a breach of contract, leading to the assessment of liquidated damages pursuant to Section 26.1(g) and such other remedies as are available to Owner.

(b) Contract Goals

(i) For purposes of this Contract, Owner hereby establishes an overall goal of XX% for MWBE participation, XX% for New York State-certified minority-owned business enterprise ("MBE") participation and XX% for New York State-certified women-owned business enterprise ("WBE") participation (collectively, "MWBE Contract Goals") based on the current availability of MBEs and WBEs.

(ii) For purposes of providing meaningful participation by MWBEs on the Agreement and achieving the MWBE Contract Goals established in Section 26.1(b)(i) hereof, Consultant should reference the directory of MWBEs at the following internet address: https://ny.newnycontracts.com.

(iii) Additionally, Consultant is encouraged to contact the Division of Minority and Women's Business Development at (212) 803-2414 to discuss additional methods of maximizing participation by MWBEs on this Agreement.

(iv) Consultant understands that only sums paid to MWBEs for the performance of a commercially useful function, as that term is defined in 5 NYCRR § 140.1, may be applied towards the achievement of the applicable MWBE participation goal. [FOR CONSTRUCTION CONTRACTS – The portion of a contract with an MWBE serving as a supplier that shall be deemed to represent the commercially useful function performed by the MWBE shall be 60% of the total value of the contract. The portion of a contract with an MWBE serving as a broker that shall be deemed to represent the commercially useful function performed by the MWBE shall be the monetary value for fees, or the markup percentage, charged by the MWBE]. [FOR ALL OTHER CONTRACTS - The portion of a contract with an MWBE serving as a broker that shall be deemed to represent the commercially useful function performed by the MWBE shall be 25% of the total value of the contract.]

(v) Consultant must document "good faith efforts," pursuant to 5 NYCRR § 142.8, to provide meaningful participation by MWBEs as Subconsultants and suppliers in the performance of this Agreement. Such documentation shall include, but not necessarily be limited to:

(A) Evidence of outreach to MWBEs;
(B) Any responses by MWBEs to Consultant's outreach;
(C) Copies of advertisements for participation by MWBEs in appropriate general circulation, trade, and minority or women-oriented publications;
(D) The dates of attendance at any pre-bid, pre-award, or other meetings, if any, scheduled by Owner with MWBEs; and,
(E) Information describing specific steps undertaken by Consultant to reasonably structure the Work to maximize opportunities for MWBE participation.

(c) Equal Employment Opportunity ("EEO")

(i) The provisions of Article 15-A of the Executive Law and the rules and regulations promulgated thereunder pertaining to equal employment opportunities for minority group members and women shall apply to this Agreement.

(ii) In performing the Agreement, Consultant shall:

(A) Ensure that each Consultant and Subconsultant performing work on the Agreement shall undertake or continue existing EEO programs to ensure that minority group members and women are afforded equal employment opportunities without discrimination because of race, creed, color, national origin, sex, age, disability or marital status. For these purposes, EEO shall apply in the areas of recruitment, employment, job assignment, promotion, upgrading, demotion, transfer, layoff, or termination and rates of pay or other forms of compensation.

(B) Consultant shall submit an EEO policy statement to Owner within seventy-two (72) hours after the date of the notice by Owner to award the Agreement to Consultant.

(C) If Consultant, or any of its Subconsultants, does not have an existing EEO policy statement, Owner may require Consultant or Subconsultant to adopt a model statement (see Exhibit D – Equal Employment Opportunity Policy Statement).

(D) Consultant's EEO policy statement shall include the following language:

(1) Consultant will not discriminate against any employee or applicant for employment because of race, creed, color, national origin, sex, age, disability, or marital status, will undertake or continue existing EEO programs to ensure that minority group members and women are afforded equal employment opportunities without discrimination, and shall make and document its conscientious and active efforts to employ and utilize minority group members and women in its work force.

(2) Consultant shall state in all solicitations or advertisements for employees that, in the performance of the contract, all qualified applicants will be afforded equal employment opportunities without discrimination because of race, creed, color, national origin, sex, age, disability or marital status.

(3) Consultant shall request each employment agency, labor union, or authorized representative of workers with which it has a collective bargaining or other agreement or understanding, to furnish a written statement that such employment agency, labor union, or representative will not discriminate on the basis of race, creed, color, national origin, sex age, disability or marital status and that such union or representative will affirmatively cooperate in the implementation of Consultant's obligations herein.

(4) Consultant will include the provisions of Sections 26.1(c)(ii)(D)(1) through (3), which provides for relevant provisions of the Human Rights Law, in every subcontract in such a manner that the requirements of the subdivisions will be binding upon each Subconsultant as to the Work.

[PLEASE NOTE THAT THIS REQUIREMENT "C" IS ONLY APPLICABLE WHERE A STATE AGENCY EXPECTS TO ENTER INTO A STATE CONTRACT WITH A TOTAL EXPENDITURE IN EXCESS OF $250,000. NOTE: THIS LANGUAGE SHOULD BE DELETED FROM THE FINAL CONTRACT]

(iii) Staffing Plan. To ensure compliance with this Section, Consultant shall submit a staffing plan to document the composition of the proposed workforce to be utilized in the performance of the Agreement by the specified categories listed, including ethnic background, gender, and Federal occupational categories. Consultant shall complete the staffing plan form (https://www.ogs.ny.gov/MWBE/Docs/EEO100.docx) and submit it as part of their bid or proposal or within a reasonable time, as directed by Owner.

WORKFORCE UTILIZATION REPORTS SHALL BE COLLECTED ON A MONTHLY BASIS FOR CONSTRUCTION CONTRACTS AND A QUARTERLY BASIS FOR ALL OTHER CONTRACTS. NOTE: THIS LANGUAGE SHOULD BE DELETED FROM THE FINAL CONTRACT]

(iv) Workforce Utilization Report

(A) Consultant shall submit a Workforce Utilization Report (https://its.ny.gov/sites/default/files/documents/eeo_workforce_utilization_report.xlsx) and shall require each of its Subconsultants to submit a Workforce Utilization Report, in such form as shall be required by Owner on a quarterly basis during the term of this Agreement.

(B) Separate forms shall be completed by Consultant and any Subconsultants.

(C) Pursuant to Executive Order #162, Consultants and Subconsultants are also required to report the gross wages paid to each of their employees for the work performed by such employees on the contract on a quarterly basis.

(v) Consultant shall comply with the provisions of the Human Rights Law, and all other State and Federal statutory and constitutional non-discrimination provisions. Consultant and its Subconsultants shall not discriminate against any employee or applicant for employment because of race, creed (religion), color, sex, national origin, sexual orientation, military status, age, disability, predisposing genetic characteristic, marital status or domestic violence victim status, and shall also follow the requirements of the Human Rights Law with regard to non-discrimination on the basis of prior criminal conviction and prior arrest.

(d) MWBE Utilization Plan

(i) Consultant represents and warrants that Consultant has submitted an MWBE Utilization Plan, or shall submit an MWBE Utilization Plan at such time as shall be required by Owner, through the New York State Contract System ("NYSCS"), which can be viewed at https://ny.newnycontracts.com, provided, however, that Consultant may arrange to provide such evidence via a non-electronic method to Owner, either prior to, or at the time of, the execution of the contract.

(ii) Consultant agrees to adhere to such MWBE Utilization Plan in the performance of the Work.

(iii) Consultant further agrees that failure to submit and/or adhere to such MWBE Utilization Plan shall constitute a material breach of the terms of the Agreement. Upon the occurrence of such a material breach, Owner shall be entitled to any remedy provided herein, including but not limited to, a finding that Consultant is non-responsive.

(e) Waivers

(i) If Consultant, after making good faith efforts, is unable to achieve the MWBE Contract Goals stated herein, Consultant may submit a request for a waiver through the NYSCS, or a non-electronic method provided by Owner. Such waiver request must be supported by evidence of Consultant's good faith efforts to achieve the maximum feasible MWBE participation towards the applicable MWBE Contract Goals. If the documentation included with the waiver request is complete, Owner shall evaluate the request and issue a written notice of approval or denial within twenty (20) business days of receipt.

(ii) If Owner, upon review of the MWBE Utilization Plan, quarterly MWBE Consultant Compliance Reports described in Section 26.1(c)(iv)(C), or any other relevant information, determines that Consultant is failing or refusing to comply with the MWBE Contract Goals, and no waiver has been issued in regards to such non-compliance, Owner may issue a notice of deficiency to Consultant. Consultant must respond to the notice of deficiency within seven (7) business days of receipt. Such response may include a request for partial or total waiver of MWBE Contract Goals.

(f) Consultant is required to submit a quarterly MWBE Consultant Compliance Report through the NYSCS, provided, however, that Consultant may arrange to provide such report via a non-electronic method to Owner by the 10th day following the end of each quarter during the term of the Agreement.

(g) Liquidated Damages - MWBE Participation

(i) Where Owner determines that Consultant is not in compliance with the requirements of this Section 26.1 and Consultant refuses to comply with such requirements, or if Consultant is found to have willfully and intentionally failed to comply with the MWBE participation goals, Consultant shall be obligated to pay to Owner liquidated damages.

(ii) Such liquidated damages shall be calculated as an amount equaling the difference between:

(A) All sums identified for payment to MWBEs had Consultant achieved the contractual MWBE goals; and

(B) All sums actually paid to MWBEs for work performed or materials supplied under the Agreement.

(iii) In the event a determination has been made which requires the payment of liquidated damages and such identified sums have not been withheld by Owner, Consultant shall pay such liquidated damages to Owner within sixty (60) days after they are assessed. Provided, however, that if Consultant has filed a complaint with the Director of the Division of Minority and Women's Business Development pursuant to 5 NYCRR § 142.12, liquidated damages shall be payable only in the event of a determination adverse to Consultant following the complaint process.

26.2 *Participation by Service-Disabled Veteran-Owned Businesses*

(a) General Provisions

Article 17-B of the New York State Executive Law provides for more meaningful participation in public procurement by New York State-certified Service-Disabled Veteran-Owned Businesses ("SDVOB"), thereby further integrating such businesses into New York State's economy. Owner recognizes the need to promote the employment of service-disabled veterans and to ensure that certified service-disabled veteran-owned businesses have opportunities for maximum feasible participation in the performance of Owner contracts.

In recognition of the service and sacrifices made by service-disabled veterans and in recognition of their economic activity in doing business in New York State, Consultants are expected to consider SDVOBs in the fulfillment of the requirements of the Agreement. Such participation may be as Subconsultants or suppliers, as protégés, or in other partnering or supporting roles.

(b) Contract Goals

(i) Owner hereby establishes an overall goal of __% for SDVOB participation, based on the current availability of qualified SDVOBs. For purposes of providing meaningful participation by SDVOBs, the Consultant should reference the directory of New York State Certified SDVOBs found at: http://ogs.ny.gov/Core/docs/CertifiedNYS_SDVOB.pdf. Questions regarding compliance with SDVOB participation goals should be directed to Anthony Peterson at

anthony.peterson@bpca.ny.gov or (212) 417-2337. Additionally, following execution of this Agreement, Consultant is encouraged to contact the Office of General Services' Division of Service-Disabled Veterans' Business Development at 518-474-2015 or VeteransDevelopment@ogs.ny.gov to discuss additional methods of maximizing participation by SDVOBs on the Agreement.

(ii) Consultant must document "good faith efforts" to provide meaningful participation by SDVOBs as subcontractors or suppliers in the performance of the Contract (see Section 26.2(d) below).

(c) SDVOB Utilization Plan

(i) In accordance with 9 NYCRR § 252.2(i), Consultants are required to submit a completed SDVOB Utilization Plan on Form SDVOB 100 (https://ogs.ny.gov/Veterans/Docs/2016/SDVOB_100_Utilization_Plan.docx) with their bid.

(ii) The Utilization Plan shall list the SDVOBs that Consultant intends to use to perform the Work, a description of the Work that Consultant intends the SDVOB to perform to meet the goals on the Agreement, the estimated dollar amounts to be paid to an SDVOB, or, if not known, an estimate of the percentage of Work the SDVOB will perform. By signing the Utilization Plan, Consultant acknowledges that making false representations or providing information that shows a lack of good faith as part of, or in conjunction with, the submission of a Utilization Plan is prohibited by law and may result in penalties including, but not limited to, termination of a contract for cause, loss of eligibility to submit future bids, and/or withholding of payments. Any modifications or changes to the agreed participation by SDVOBs after the contract award and during the term of the Agreement must be reported on a revised SDVOB Utilization Plan and submitted to Owner.

(iii) Owner will review the submitted SDVOB Utilization Plan and advise the Consultant of Owner acceptance or issue a notice of deficiency within 20 days of receipt.

(iv) If a notice of deficiency is issued, Consultant agrees that it shall respond to the notice of deficiency, within seven business days of receipt, by submitting to Owner a written remedy in response to the notice of deficiency. If the written remedy that is submitted is not timely or is found by Owner to be inadequate, Owner shall notify Consultant and direct the Consultant to submit, within five business days of notification by Owner, a request for a partial or total waiver of SDVOB participation goals on Form SDVOB 200 (https://ogs.ny.gov/Veterans/Docs/2016/SDVOB_200_Waiver_Form.docx). Failure to file the waiver form in a timely manner may be grounds for disqualification of the bid or proposal.

(v) Owner may disqualify a Consultant's bid or proposal as being non-responsive under the following circumstances:

(A) If Consultant fails to submit an SDVOB Utilization Plan;
(B) If Consultant fails to submit a written remedy to a notice of deficiency;
(C) If Consultant fails to submit a request for waiver; or

(D) If Owner determines that Consultant has failed to document good faith efforts.

(vi) Consultant certifies that it will follow the submitted SDVOB Utilization Plan for the performance of SDVOBs on the Agreement pursuant to the prescribed SDVOB contract goals set forth above.

(vii) Consultant further agrees that a failure to use SDVOBs as agreed in the Utilization Plan shall constitute a material breach of the terms of the Contract. Upon the occurrence of such a material breach, Owner shall be entitled to any remedy provided herein, including but not limited to, a finding of Consultant non-responsibility.

(d) Waivers

(i) Prior to submission of a request for a partial or total waiver, Consultant shall speak to Anthony Peterson at anthony.peterson@bpca.ny.gov or (212) 417-2337 for guidance.

(ii) In accordance with 9 NYCRR § 252.2(m), a Consultant that is able to document good faith efforts to meet the goal requirements, as set forth in Section 26.2(e) below, may submit a request for a partial or total waiver on Form SDVOB 200 (https://ogs.ny.gov/Veterans/Docs/2016/SDVOB_200_Waiver_Form.docx), accompanied by supporting documentation. Consultant may submit the request for waiver at the same time it submits its SDVOB Utilization Plan. If a request for waiver is submitted with the SDVOB Utilization Plan and is not accepted by Owner at that time, the provisions of Section 26.2(c)(iii), (iv) and (v) will apply. If the documentation included with the Consultant's waiver request is complete, Owner shall evaluate the request and issue a written notice of acceptance or denial within 20 days of receipt.

(iii) Consultant shall attempt to utilize, in good faith, the SDVOBs identified within its SDVOB Utilization Plan, during the performance of the Work. Requests for a partial or total waiver of established goal requirements made subsequent to award of the Agreement may be made at any time during the term of the Agreement to Owner, but must be made no later than prior to the submission of a request for final payment.

(iv) If Owner, upon review of the SDVOB Utilization Plan and Monthly SDVOB Compliance Report determines that Consultant is failing or refusing to comply with the contract goals and no waiver has been issued in regards to such non-compliance, Owner may issue a notice of deficiency to the Consultant. The Consultant must respond to the notice of deficiency within seven business days of receipt. Such response may include a request for partial or total waiver of SDVOB contract goals. Waiver requests should be sent to Owner.

(e) Required Good Faith Efforts. In accordance with 9 NYCRR § 252.2(n), Consultants must document their good faith efforts toward utilizing SDVOBs on the Agreement. Evidence of required good faith efforts shall include, but not be limited to, the following:

(i) Copies of solicitations to SDVOBs and any responses thereto.

(ii) Explanation of the specific reasons each SDVOB that responded to Consultants' solicitation was not selected.

(iii) Dates of any pre-bid, pre-award or other meetings attended by Consultant, if any, scheduled by Owner with certified SDVOBs whom Owner determined were capable of fulfilling the SDVOB goals set in the Agreement.

(iv) Information describing the specific steps undertaken to reasonably structure the Work for the purpose of subcontracting with, or obtaining supplies from, certified SDVOBs.

(v) Other information deemed relevant to the waiver request.

(f) Monthly SDVOB Consultant Compliance Report

In accordance with 9 NYCRR § 252.2(q), Consultant is required to report Monthly SDVOB Consultant Compliance to Owner during the term of the Agreement for the preceding month's activity, documenting progress made towards achieving the SDVOB goals. This information must be submitted using form SDVOB 101 available at https://ogs.ny.gov/Veterans/Docs/2016/SDVOB_101_Monthly_Compliance%20_Report.docx and should be completed by the Consultant and submitted to Owner, by the 10th day of each month during the term of the Contract, for the preceding month's activity to: Anthony Peterson at anthony.peterson@bpca.ny.gov.

(g) Breach of Contract and Damages

In accordance with 9 NYCRR § 252.2(s), any Consultant found to have willfully and intentionally failed to comply with the SDVOB participation goals set forth in this Agreement, shall be found to have breached the Agreement and Consultant shall pay damages as set forth therein.

27. Responsibility

(a) Consultant shall at all times during the Term of this Agreement remain responsible. Consultant agrees, if requested by Owner or Owner's designee, to present evidence of its continuing legal authority to do business in New York State, integrity, experience, ability, prior performance, and organizational and financial capacity.

(b) Owner or Owner's designee, in its sole discretion, reserves the right to suspend any or all activities under this Agreement, at any time, when it discovers information that calls into question Consultant's responsibility. In the event of such suspension, Consultant will be given written notice outlining the particulars of such suspension. Upon issuance of such notice, Consultant must comply with the terms of the suspension order. Activity under the Agreement may resume at such time as Owner or its designee issues a written notice authorizing a resumption of performance under the Agreement.

(c) Upon written notice to Consultant, and a reasonable opportunity to be heard with appropriate officials or staff of Owner, this Agreement may be terminated by Owner or Owner's designee at Consultant's expense where Consultant is determined by Owner or its designee to be

non-responsible. In such event, Owner or its designee may complete the contractual requirements in any manner it deems advisable, and pursue available legal or equitable remedies for breach.

28. Interest of Others

Nothing in this Agreement shall be construed to give any person other than Owner and Consultant any legal or equitable right, remedy or claim. This Agreement shall be held to be for the sole and exclusive benefit of Owner and Consultant.

29. Executory Contract

It is understood by and between the parties hereto that this Agreement shall be deemed executory to the extent of the monies available to Owner and no liability on account thereof shall be incurred by Owner beyond monies available for the purpose thereof. In no event shall any claim be asserted under this Agreement by Consultant or any Subconsultant against any member, officer, employee, lessee, consultant or agent of Owner or the State of New York. By execution of this Agreement, Consultant agrees to look solely to Owner with respect to any claim that may arise.

30. Participation in International Boycott Prohibited

Consultant agrees, as a material condition of this Agreement, that neither Consultant nor any substantially owned or affiliated person, firm, partnership or corporation has participated or is participating or shall participate in an international boycott in violation of the provisions of the United States Export Administration Act of 1969, as amended, or the United States Export Administration Act of 1979, as amended, or the Regulations of the United States Department of Commerce promulgated thereunder. This Agreement shall be rendered forfeited and void by the Comptroller of the State of New York if, subsequent to execution, such person, firm, partnership or corporation has been convicted of a violation of the provisions of either of such federal acts or such Regulations or has been found upon the final determination of the United States Commerce Department or any other appropriate agency of the United States to have violated the provisions of either of such federal acts or such Regulations.

31. MacBride Fair Employment Principles

If the amount payable to Consultant under this Agreement is greater than $15,000, Consultant hereby certifies that it and/or any individual or legal entity in which it holds a 10% or greater ownership interest, and any individual or legal entity that holds a 10% or greater ownership in it, either have no business operations in Northern Ireland, or shall take lawful steps in good faith to conduct any business operations they have in Northern Ireland in accordance with the MacBride Fair Employment Principles relating to nondiscrimination in employment and freedom of workplace opportunity regarding such operations in Northern Ireland, as set forth in Section 165(5) of the New York State Finance Law, and shall permit independent monitoring of their compliance with such Principles.

32. Limitation Periods

Any legal action or proceeding against Owner must be commenced no later than one (1) year after the earlier of: (a) the termination of this Agreement, or (b) the last day Consultant

performed work physically at the site of the Work.

33. Iran Divestment Act

By signing this Agreement, each person and each person signing on behalf of any other party certifies, and in the case of a joint bid or partnership each party thereto certifies as to its own organization, under penalty of perjury, that to the best of its knowledge and belief that each person is not on the list created pursuant to paragraph (b) of subdivision 3 of Section 165-a of the State Finance Law.

34. Termination for Failure to Disclose Under NYS Finance Law §139k

Owner reserves the right to terminate this Agreement in the event it is found that the certification filed by Consultant pursuant to New York State Finance Law §139-k was intentionally false or intentionally incomplete. Upon such finding, Owner may exercise its termination right by providing written notification to the Consultant in accordance with the written notification terms of this contract.

35. Comptroller's Approval

If this contract is considered an eligible contract as defined by Title 2 of NYCRR Part 206, it is subject to the New York State Comptroller's approval, and therefore shall not be valid and enforceable until that approval has been obtained. A contract is considered "eligible" as defined by Title 2 of NYCRR Part 206, if it is not a specifically exempt contract, is executed by a state authority on or after March 1, 2010 where the aggregate consideration under the contract may reasonably be valued in excess of one million dollars, AND the contract is either (1) awarded on a single-source basis, sole-source basis or pursuant to any other method of procurement that is not a competitive procurement OR (2) supported in whole or part with funds appropriated from the Community Projects Fund (007).

36. Binding Contract

A binding contract between the parties shall exist only if and at such time as both parties have executed this document.

37. Counterparts

This Agreement may be executed in any number of counterparts, all of which taken together shall constitute one instrument, but the Agreement shall not be deemed effective unless signed by all parties.

38. Section Headings

Section headings contained in this Agreement are for convenience only and shall not be considered for any purpose in governing, limiting, modifying, construing or affecting the provisions of this Agreement and shall not otherwise be given legal effect.

39. Subordination of Terms in the Exhibits

In the event of a conflict of terms, the terms stated in Sections 1-39 herein, shall take precedence over and shall prevail over any printed, typed, or handwritten terms located in the Exhibits.

(SIGNATURE PAGE FOLLOWS)

IN WITNESS WHEREOF, the parties hereto have executed this Agreement as of the date first above written.

HUGH L. CAREY BATTERY PARK CITY AUTHORITY

By: _____

Name: _____

Title: _____

[COMPANY]

By: _____

Name: _____

Title: _____

FEIN# [???]

EXHIBIT A

SCOPE OF WORK

EXHIBIT B

RATES

EXHIBIT C

FORM OF TIME SHEET

Employee Name/Title	Date of Work	Time Work Began	Time Work Ended	# of Hours	Rate of Pay Per Contract	Summary of Work Performed*	Employee Signature
		Total:					

*For services and/or additional hours that are extraordinary to scope

Supervisors Signature _____

Title _____

EXHIBIT D

M/WBE AND EEO POLICY STATEMENT

Consultant agrees to adopt the following policies with respect to the Work:

MBWE

Consultant will and will cause its Subconsultants to take good faith actions to achieve the M/WBE contract participations goals set by the Owner for that area in which the Owner-funded project is located, by taking the following steps:

(a) Actively and affirmatively solicit bids for contracts and subcontracts from qualified State-certified MBEs or WBEs, including solicitations to M/WBE consultant associations.

(b) Request a list of State-certified M/WBEs from Owner and solicit bids from them directly.

(c) Ensure that plans, specifications, request for proposals and other documents used to secure bids will be made available in sufficient time for review by prospective M/WBEs.

(d) Where feasible, divide the work into smaller portions to enhance participation by M/WBEs and encourage the formation of joint ventures and other partnerships among M/WBE consultants to enhance their participation.

(e) Document and maintain records of bid solicitation, including those to M/WBEs and the results thereof. Consultant will also maintain records of actions that its Subconsultants have taken toward meeting M/WBE contract participation goals.

(f) Ensure that progress payments to M/WBEs are made on a timely basis so that undue financial hardship is avoided, and that bonding and other credit requirements are waived or appropriate alternatives developed to encourage M/WBE participation.

EEO

(a) This organization will not discriminate against any employee or applicant for employment because of race, creed, color, national origin, sex, age, disability or marital status, will undertake or continue existing programs of affirmative action to ensure that minority group members are afforded equal employment opportunities without discrimination, and shall make and document its conscientious and active efforts to employ and utilize minority group members and women in its work force on Owner contracts.

(b) Consultant shall state in all solicitation or advertisements for employees that in the performance of the Owner contract all qualified applicants will be afforded equal employment opportunities without discrimination because of race, creed, color, national origin, sex disability or marital status.

(c) At the request of Owner, Consultant shall request each employment agency, labor union, or authorized representative will not discriminate on the basis of race, creed, color, national origin, sex, age, disability or marital status and that such union or representative will affirmatively cooperate in the implementation of Consultant's obligations herein.

(d) Consultant shall comply with the provisions of the Human Rights Law, all other State and Federal statutory and constitutional non-discrimination provisions. Consultant and Subconsultants shall not discriminate against any employee or applicant for employment because of race, creed (religion), color, sex, national origin, sexual orientation, military status, age, disability, predisposing genetic characteristic, marital status or domestic violence victim status, and shall also follow the requirements of the Human Rights Law with regard to non-discrimination on the basis of prior criminal conviction and prior arrest.

(e) Consultant will include the provisions of sections (a) through (d) above in every subcontract in such a manner that the requirements of the subdivisions will be binding upon each Subconsultant as to work in connection with Owner's contract.

Agreed to this _____ day of _____, _____

By: _____

Print: _____ Title: _____

EXHIBIT D

COST PROPOSAL

(Proposer to submit executed Cost Proposal on its letterhead)

Date:

Battery Park City Authority ("BPCA")
200 Liberty - 24th Floor
New York, New York 10281

Attention: Mr. Michael LaMancusa, Contract Administrator

Dear Mr. LaMancusa:

The undersigned (the "Proposer") hereby proposes to provide all work necessary to perform the **Phase 7 Pile Remediation – Marine Construction Services Project**. The Proposer agrees to commence the Work immediately upon execution of the Contract, in accordance with its terms, and complete the Project for the lump sum written below.

A. Cost Proposal

A total lump-sum amount of $_____ (_____ Dollars and _____ Cents) to perform all of the work described in, and associated with, the Scope of Work in Exhibit A of the RFP.

B. Itemized Proposal and Labor Rates

1. The Proposer has submitted with its cost proposal an itemized cost for the Work according to the attached Schedule of Values, in the form of Exhibit E, to BPCA's Request for Proposal for the Project.

2. The Proposer has submitted with its Cost Proposal, labor rates in the form of Exhibit F to BPCA's Request for Proposal for the Project, for all trades, including all costs except overhead and profit. Prices shown include base hourly rate, overtime rate, insurance, and benefits.

Proposer:

_____

By: _____

Title: _____

EXHIBIT E

SCHEDULE OF VALUES

General Conditions	**$**_____
Bonds	**$**_____
Insurance	**$**_____
Location 1: Wagner Park Esplanade	
Mobilization/Demobilization	**$**_____
Pile Remediation / Repair	**$**_____
Location 2: Rector Place Esplanade	
Mobilization/Demobilization	**$**_____
Pile Remediation / Repair	**$**_____
Location 3: Rockefeller Park Esplanade	
Mobilization/Demobilization	**$**_____
Pile Remediation / Repair	**$**_____
TOTAL	**$**_____

EXHIBIT F

LABOR RATES

The following labor rates are to be listed by craft and classification (Foreman, Journeyman, etc.), and are to include base wages, benefits, taxes, insurance, and payroll costs complete. Overhead and profit are not to be included:

CRAFT	CLASSIFICATION	HOURLY RATES	OVERTIME
LABORER CONCRETE			
CARPENTER			
DOCKBUILDER			
DIVER			
IRON WORKER			
LABORER-EXCAVATION/DEMO			
OPERATING ENGINEER			
OILER/MAINTENANCE ENGINEER			
FIELD SUPERVISOR			
FOREMAN			
TEAMSTER			
ELECTRICIAN			
PLUMBER			

EXHIBIT G

DRAWINGS AND SPECIFICATIONS

05/18/2020

BATTERY PARK CITY AUTHORITY PHASE VII PILE REMEDIATION ROCKEFELLER PARK, ESPLANADE PLAZA AND WAGNER PARK

BATTERY PARK CITY ESPLANADE
NEW YORK, NEW YORK
MAY 2020

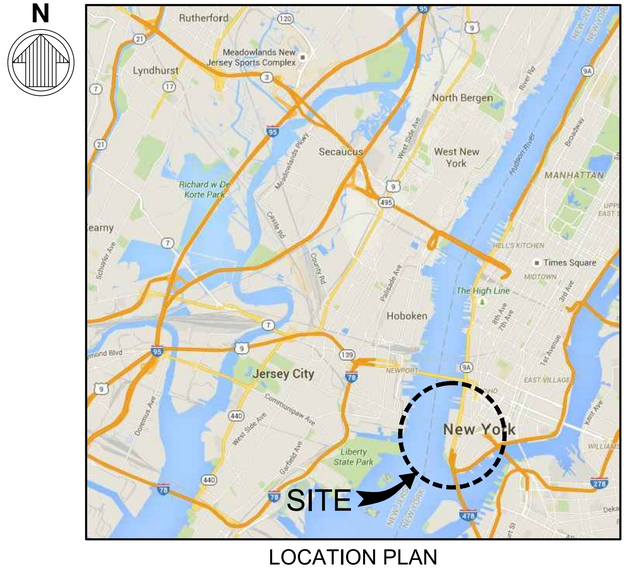

LOCATION PLAN

INDEX TO DRAWINGS		
INDEX NO.	SHEET NO.	SHEET TITLE
1	G–001	TITLE SHEET
2	G–002	BLOCK AND LOT DIAGRAM
3	G–003	FEMA MAPS
4	G–004	GENERAL NOTES
		STRUCTURAL
5	S–101	ROCKEFELLER PARK REPAIR PLAN, SECTIONS, AND LOCATION KEY
6	S–102	ESPLANADE PLAZA REPAIR PLAN, SECTIONS, AND LOCATION KEY
7	S–103	WAGNER PARK REPAIR PLAN, SECTIONS, AND LOCATION KEY (SHEET 1 OF 2)
8	S–104	WAGNER PARK REPAIR PLAN, SECTIONS, AND LOCATION KEY (SHEET 2 OF 2)
9	S–501	REPAIR DETAILS (SHEET 1 OF 2)
10	S–502	REPAIR DETAILS (SHEET 2 OF 2)
11	S–601	PILE REPAIR SCHEDULE (SHEET 1 OF 5)
12	S–602	PILE REPAIR SCHEDULE (SHEET 2 OF 5)
13	S–603	PILE REPAIR SCHEDULE (SHEET 3 OF 5)
14	S–604	PILE REPAIR SCHEDULE (SHEET 4 OF 5)
15	S–605	PILE REPAIR SCHEDULE (SHEET 5 OF 5)

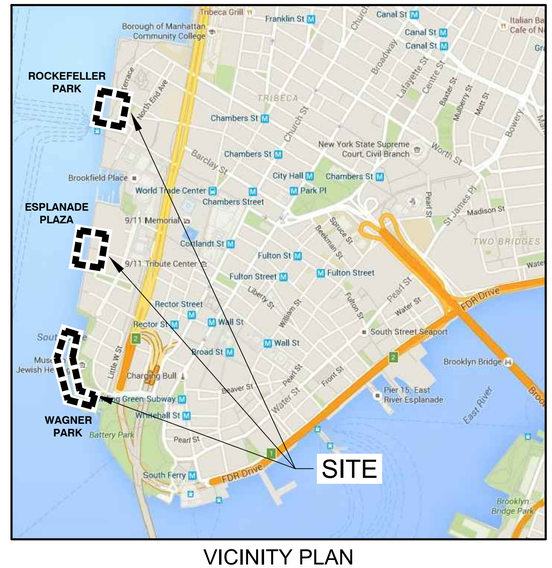

VICINITY PLAN

100% DESIGN SUBMISSION
ISSUED: 2020-05-13

OWNER/ CLIENT

NEW YORK STATE OF OPPORTUNITY. | Battery Park City Authority

PRIME CONSULTANT

m&n engineering, p.c.
529 FIFTH AVENUE, 14TH FLOOR
NEW YORK, NY 10017
(212) 768-7454

NO.	REVISION	APP'D	DATE
B	100% SUBMISSION	SF	05/13/20
A	60% SUBMISSION	SF	04/24/20

KEY PLAN

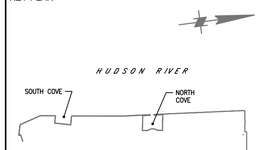

PROJECT
BATTERY PARK CITY AUTHORITY PHASE VII PILE REMEDIATION ROCKEFELLER PARK, ESPLANADE PLAZA AND WAGNER PARK

DRAWING TITLE
TITLE SHEET

DOB IDENTIFICATION NUMBER
--

SEAL & SIGNATURE

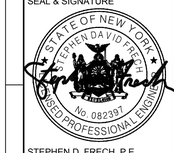

STEPHEN D. FRECH, P.E.
NYS LIC # 082397

DATE: MAY 2020
PROJECT NO. 10957
DRAWN BY ME
CHECKED BY DJ
DRAWING NO. G-001
SHEET NO. 1 of 15

BSCAN

DOB APPROVAL STAMP

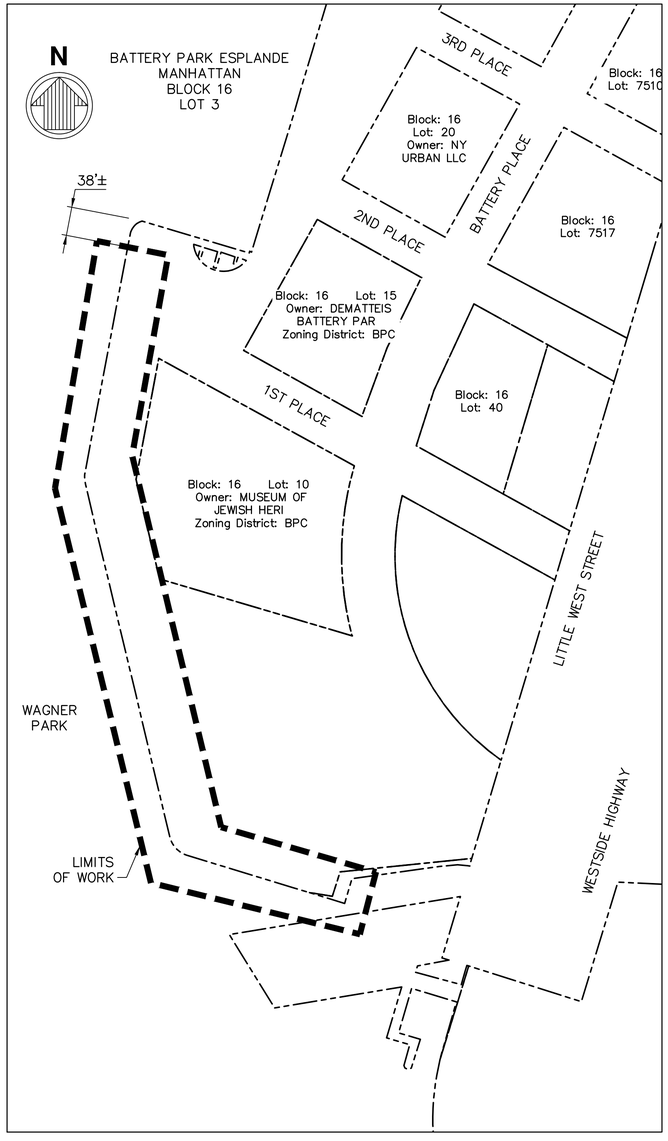

BLOCK AND LOT DIAGRAM: WAGNER PARK
NOT TO SCALE

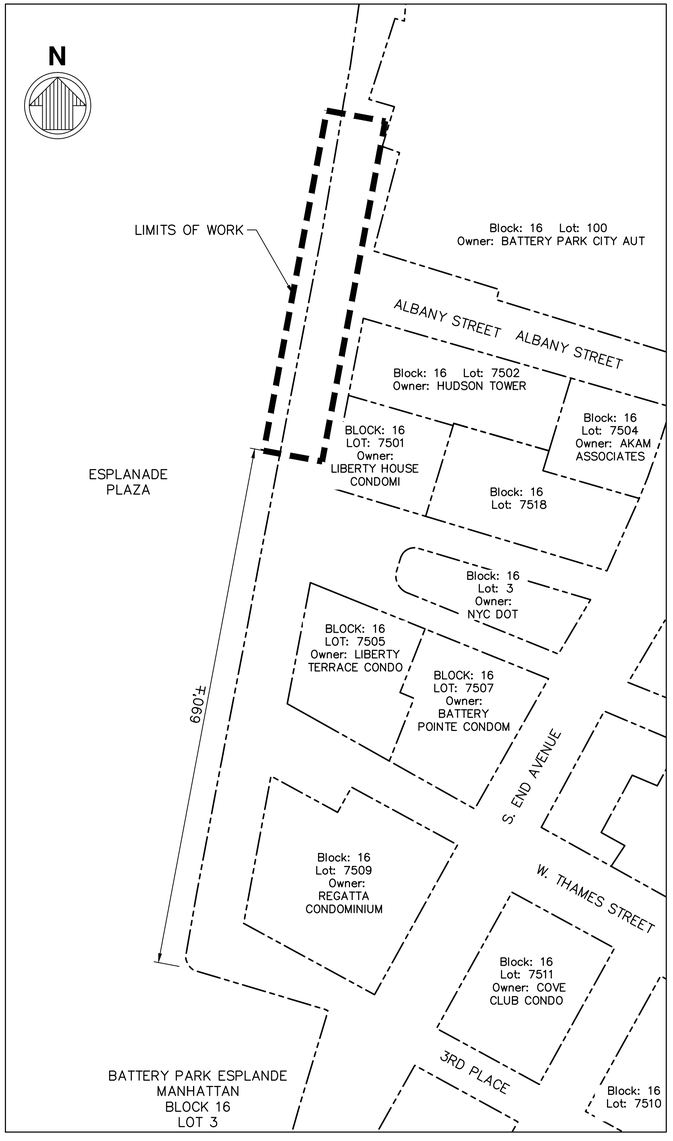

BLOCK AND LOT DIAGRAM: ESPLANADE PLAZA
NOT TO SCALE

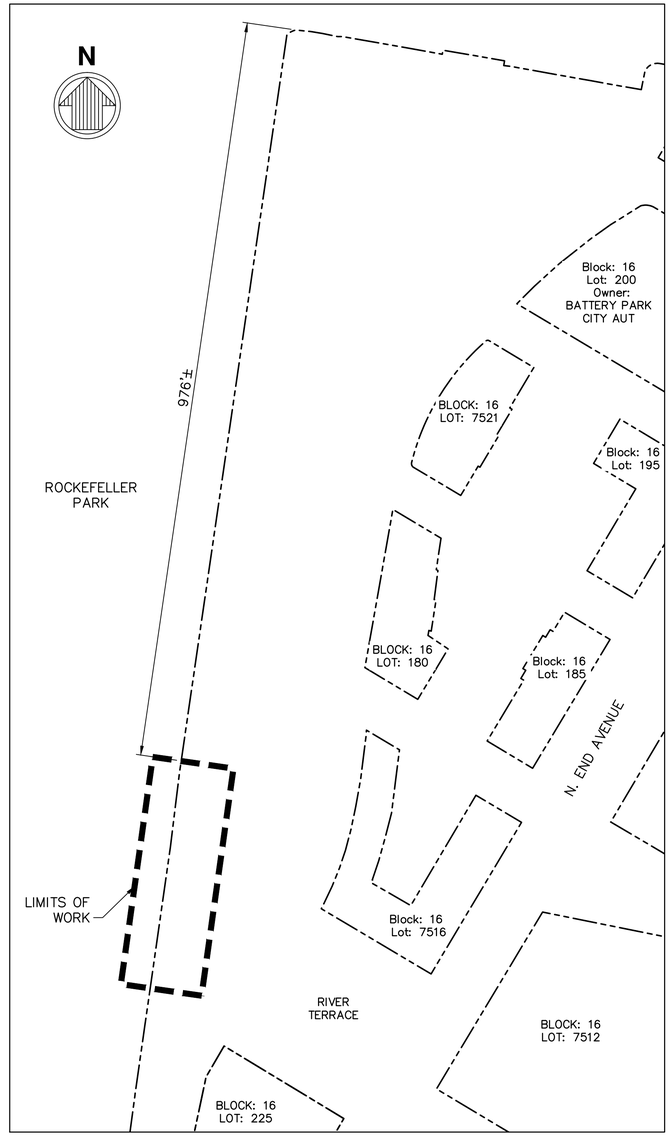

BLOCK AND LOT DIAGRAM: ROCKEFELLER PARK
NOT TO SCALE

OWNER: BATTERY PARK CITY AUTHORITY
ZONING DISTRICT: BPC

100% DESIGN SUBMISSION
ISSUED: 2020-05-13

OWNER/ CLIENT

NEW YORK STATE OF OPPORTUNITY. | Battery Park City Authority

PRIME CONSULTANT

m&n engineering, p.c.
529 FIFTH AVENUE, 14TH FLOOR
NEW YORK, NY 10017
(212) 768-7454

NO.	REVISION	APP'D	DATE
B	100% SUBMISSION	SF	05/13/20
A	60% SUBMISSION	SF	04/24/20

KEY PLAN

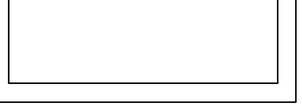

PROJECT

BATTERY PARK CITY AUTHORITY PHASE VII PILE REMEDIATION
ROCKEFELLER PARK, ESPLANADE PLAZA AND WAGNER PARK

DRAWING TITLE

BLOCK AND LOT DIAGRAM

DOB IDENTIFICATION NUMBER

--

SEAL & SIGNATURE

STATE OF NEW YORK · STEPHEN DAVID FRECH · No. 082397 · LICENSED PROFESSIONAL ENGINEER

STEPHEN D. FRECH, P.E.
NYS LIC # 082397

DATE: MAY 2020
PROJECT NO. 10957
DRAWN BY ME
CHECKED BY DJ
DRAWING NO. G-002
SHEET NO. 2 of 15

BSCAN

DOB APPROVAL STAMP

05/18/2020


SITE
N
JOINS PANEL 0182
980000 FT
200000 FT
195000 FT
190000 FT
JOINS PANEL 0183
JOINS PANEL 0203
JOINS PANEL 0192
Hudson River
East River
Upper New York Bay
City of New York 10017
GOVERNORS ISLAND
ZONE X
ZONE AE
ZONE VE
KIMBEL ROAD
CARDOZO ROAD
CHINOOTEAGUE ROAD
KENNEDY BOULEVARD
Sea Wall
CANAL STREET
SAINT JAMES PLACE
WARREN STREET
BALTIC STREET
ATLANTIC AVENUE
KINGS COUNTY
FURMAN STREET
LIMIT OF MODERATE WAVE ACTION
ZONE X
ZONE AE (EL 10)
ZONE AE (EL 11)
ZONE VE (EL 12)
ZONE AE (EL 13)
ZONE VE (EL 13)
ZONE AE (EL 15)
ZONE X
ZONE X
ZONE AE
ZONE X
ZONE X
ZONE X

GENERAL NOTES

1. ALL WORK SHALL CONFORM TO THE REQUIREMENTS OF THE CONTRACT DRAWINGS AND SPECIFICATIONS. IN CASE OF DISCREPANCIES, THE CONTRACT DRAWINGS SHALL GOVERN.
2. THE CONTRACTOR SHALL BE RESPONSIBLE FOR THE PERFORMANCE OF ALL WORK ON THE CONTRACT DOCUMENTS, INCLUDING DEMOLITION AND REMOVAL AND INSTALLATION OF ALL WORK MATERIALS IN FULL COMPLIANCE WITH CODES, RULES AND REGULATIONS GOVERNING SAID WORK.
3. THE CONTRACTOR IS SOLELY RESPONSIBLE FOR ALL MEANS AND METHODS OF THE WORK AND FOR THE SAFETY OF THE SITE.
4. CONTRACTOR SHALL VERIFY ALL INDICATED CONDITIONS AND DIMENSIONS IN THE FIELD BEFORE COMMENCING ANY FABRICATION, ORDERING OF MATERIAL, OR PERFORMING ANY WORK. CONTRACTOR SHALL NOTIFY THE OWNER'S REPRESENTATIVE, IN WRITING, OF ANY DISCREPANCIES IN CONDITIONS AND/OR DIMENSIONS FOUND IN THE FIELD AND IN THE CONTRACT DOCUMENTS. CONTRACTOR SHALL ALSO NOTIFY THE OWNER'S REPRESENTATIVE OF ANY CONDITIONS THAT MAY HAMPER THE PERFORMANCE OF THE WORK IN ACCORDANCE WITH THE CONTRACT DOCUMENTS.
5. THROUGHOUT THE CONTRACT DRAWINGS, SPECIFICATIONS AND THESE GENERAL NOTES THE TERM "OWNER" IS USED. THIS TERM REFERENCES THE BATTERY PARK CITY AUTHORITY (BPCA).
6. UPON COMPLETION OF WORK, THE CONTRACTOR SHALL REMOVE ALL DEBRIS, EQUIPMENT AND UNUSED MATERIAL FROM THE SITE.
7. ALL DEMOLISHED MATERIAL, EXCEPT ITEMS DIRECTED BY THE OWNER TO BE SALVAGED, SHALL BE REMOVED FROM THE SITE AND DISPOSED OF IN ACCORDANCE WITH ALL FEDERAL, STATE AND LOCAL REQUIREMENTS.
8. THE CONTRACTOR SHALL BE RESPONSIBLE FOR THE MAINTENANCE OF THE CONSTRUCTION SITE AND THE AREAS OF WORK WHILE PERFORMING THE WORK UNDER THIS CONTRACT. CONSTRUCTION DEBRIS SHALL BE REMOVED FROM THE CONSTRUCTION SITE ON A DAILY BASIS. NO BURNING OF DEBRIS SHALL BE PERMITTED.
9. DURING ALL PHASES OF THE WORK, ALL PRECAUTIONS SHALL BE TAKEN AS NECESSARY OR MAY BE REQUIRED TO PERMANENTLY PREVENT CONTAMINATED WATER, GASOLINE, CONSTRUCTION DEBRIS AND ANY OTHER CONTAMINANT FROM ENTERING THE WATERWAY. THIS INCLUDES MATERIAL BEING PUMPED INTO PILE FORMS.
10. CONTRACTOR SHALL INSTALL A FLOATING BOOM AND TURBIDITY CURTAIN DURING ALL PHASES OF MARINE CONSTRUCTION.
11. DISPOSAL OF HAZARDOUS OR CONTAMINATED MATERIALS, GROUNDWATER OR SOIL ENCOUNTERED SHALL BE IN ACCORDANCE WITH ALL FEDERAL, STATE AND LOCAL REQUIREMENTS.
12. CONTRACTOR SHALL EXERCISE CARE TO PREVENT DAMAGE TO ANY MATERIALS OR STRUCTURES THAT ARE TO REMAIN IN PLACE. THE CONTRACTOR SHALL REPAIR ANY DAMAGE TO THESE MATERIALS AT NO ADDITIONAL COST TO THE OWNER. THE RESTORATION WORK SHALL BE APPROVED BY THE OWNER'S REPRESENTATIVE.
13. ALL AREAS OUTSIDE OF THE "LIMITS OF WORK" SHOWN ON THE CONTRACT DRAWINGS, WHICH ARE DAMAGED BY THE WORK, SHALL BE RESTORED TO THEIR ORIGINAL CONDITION AT NO ADDITIONAL COST TO THE OWNER. THE RESTORATION WORK SHALL BE APPROVED BY THE OWNER'S REPRESENTATIVE.
14. ALL WORK SHALL BE PERFORMED IN ACCORDANCE WITH ALL APPLICABLE FEDERAL, STATE AND LOCAL REQUIREMENTS.
15. THE CONTRACTOR SHALL SCHEDULE AND COORDINATE ALL WORK AND DELIVERIES OF CONSTRUCTION MATERIALS ON SITE WITH THE CONSTRUCTION MANAGER. THERE IS LIMITED ACCESS TO THE SITE DUE TO TRAFFIC BARRIERS, TREES, PLANTS, SHRUBS, BENCHES, TRASH CANS, ETC. ALL EGRESS AND EXITS TO AND FROM THE PIER AND CONSTRUCTION SITE SHALL BE KEPT READILY ACCESSIBLE AND CLEAR AT ALL TIMES. CONSTRUCTION EQUIPMENT WILL NOT BE PERMITTED TO OBSTRUCT ROADWAYS AND OR PASSAGEWAYS.
16. THE CONTRACTOR SHALL PREPARE, LAYOUT AND INSTALL WORK IN SUCH A MANNER AS NOT TO DELAY OR INTERFERE WITH THE CARRYING FORWARD OF THE WORK UNDER THIS CONTRACT AND/OR ANY OTHER WORK BEING PERFORMED ON THE SITE. CONTRACTOR SHALL SUBMIT A LOGISTICS PLAN THAT DEMONSTRATES HOW THE PROJECT WILL BE STAGED AND WORK PERFORMED. THIS PLAN SHALL INCLUDE POSITIONING OF EQUIPMENT DURING ALL PHASES OF WORK. THIS PLAN SHALL BE SUBMITTED BY THE CONTRACTOR FOR REVIEW BY THE OWNER'S REPRESENTATIVE. NO WORK ON THIS SITE SHALL BE PERMITTED TO COMMENCE PRIOR TO THE REVIEW OF THIS DOCUMENT.
17. CONTRACTOR SHALL SEEK APPROVAL OF OWNER'S REPRESENTATIVE PRIOR TO MOVING AND/OR STORING ANY CONSTRUCTION MATERIALS ON THE SITE. IN ADDITION, THE CONTRACTOR SHALL SUBMIT TO THE OWNER'S REPRESENTATIVE FOR REVIEW THE GROSS VEHICLE WEIGHT AND AXLE ALIGNMENT OF ANY HEAVY MACHINERY THAT WILL BE DRIVEN ON THE SITE. NO HEAVY CONSTRUCTION MACHINERY WILL BE PERMITTED ON PIER UNTIL THIS REVIEW HAS BEEN COMPLETED.
18. THE CONTRACTOR ASSUMES ALL RESPONSIBILITY FOR HIS USE OF THE PHASE 7 SITE.
19. CONTRACTOR SHALL ALLOW AND MAKE ANY NECESSARY ACCOMMODATIONS FOR THE INSPECTION OF WORK BY OWNER'S REPRESENTATIVE AT ANY TIME DURING THE INSTALLATION OF WORK GOVERNED BY THE CONTRACT DOCUMENTS.

GENERAL NOTES CONT'D

20. UNLESS NOTED OTHERWISE ON THE CONTRACT DRAWINGS OR IN THE CONTRACT OR SPECIFICATIONS, ALL LABOR, EQUIPMENT, MATERIALS, ETC. SHALL BE INCLUDED IN THE CONTRACTOR'S LUMP SUM PRICE TO COMPLETE THE WORK. ADDITIONAL UNIT PRICES MAY ALSO BE REQUESTED IN THE BID DOCUMENTS.
21. THE LOCATIONS OF EXISTING CONCRETE PILES AND OTHER STRUCTURAL ELEMENTS SHOWN ON THE CONTRACT DRAWINGS ARE BASED ON AVAILABLE INFORMATION AND ARE SCHEMATIC. CONTRACTOR'S BID SHOULD TAKE THIS INTO CONSIDERATION AND SHOULD BE BASED ON FIELD VERIFICATION OF EXISTING CONDITIONS.
22. CONCRETE PILES MAY NOT BE PERFECTLY PLUMB IN THEIR EXISTING CONDITION. CONTRACTOR SHALL TAKE THIS CONDITION INTO ACCOUNT IN THE BASE BID FOR THIS WORK.
23. THE CONTRACTOR SHALL PROVIDE AN OFFICE TRAILER FOR THE CONSTRUCTION MANAGEMENT AND/OR INSPECTION TEAM AT EACH PROJECT LOCATION.
24. THE CONTRACTOR SHALL COMPLY WITH ALL MTA TUNNEL RESTRICTIONS INCLUDING PERFORMING NO WORK WITHIN 200 FEET OF ANY EXISTING MTA TUNNEL STRUCTURE.

PERMITTING

1. ALL WORK PERFORMED BY THE CONTRACTOR SHALL BE IN COMPLIANCE WITH PERMITS AND PERMIT MODIFICATIONS ISSUED BY ANY REGULATING AGENCY HAVING JURISDICTION OVER THE WORK INCLUDING BUT NOT LIMITED TO UNITED STATES ARMY CORPS OF ENGINEERS (USACOE) PERMIT NUMBER NAN-2018-00504-ESW NATIONWIDE GENERAL PERMIT, NEW YORK STATE DEPARTMENT OF ENVIRONMENTAL CONSERVATION (NYSDEC) ID: 2-6299-00027/00033, AND THE NEW YORK CITY DEPARTMENT OF SMALL BUSINESS SERVICES (SBS).
2. THE CONTRACTOR SHALL PERFORM NO WORK ON THE SITE WITHOUT WRITTEN APPROVALS FORM THE USACOE, NYSDEC AND THE NY SBS AND ALL OTHER APPLICABLE AGENCIES HAVING JURISDICTION OVER THE SITE.
3. CONTRACTOR IS REQUIRED TO OBTAIN THE REQUIRED WORK PERMITS VIA THE SBS. THE CONTRACTOR'S SUBMISSION SHALL INCLUDE THE SEQUENCE OF OPERATIONS AND THE MEANS AND METHODS TO BE USED FOR THE PROPOSED WORK. FEES ASSOCIATED WITH THESE PERMITS ARE THE RESPONSIBILITY OF THE CONTRACTOR.
4. THE PROPOSED WORK DOES NOT AFFECT THE STRUCTURAL STABILITY OF THE ESPLANADE.
5. SUBSURFACE INVESTIGATION IS NOT REQUIRED FOR PROPOSED REPAIR.

APPENDIX G COMPLIANCE

1. SECTION G102.1.10, "OTHER ALTERATIONS TO PRE-FIRM CONSTRUCTION", DEFINES THE CONDITIONS FOR THIS PROJECT WHERE NON-SUBSTANTIAL WORK SHALL NOT BE DEEMED AN INCREASE TO THE DEGREE OF NON-COMPLIANCE. THE FOLLOWING DESCRIBES THE NON-APPLICABILITY OF THIS SECTION.
   - THE PROPOSED WORK IS NOT A SUBSTANTIAL IMPROVEMENT AS DEFINED BY SECTION BC G201.2 AND 1 RCNY 3606-01. THE COST OF THE ALTERATION IS MORE THAN $40,000, BUT LESS THAN 25% OF THE MARKET VALUE OF THE STRUCTURE AS CALCULATED IN SUBDIVISION (D) OF 1 RCNY 3606-01. PER 1 RCNY 3606-01. THEREFORE NO SUBSTANTIAL IMPROVEMENT CALCULATION IS REQUIRED.
   - G102.1.10.1: THE PROPOSED REPAIR ENHANCES THE DURABILITY AND LONG TERM RESILIENCE OF THE PRE-FIRM PILES. THE PROPOSED REPAIRS DO NOT DIMINISH THE PILE'S STRUCTURAL CAPACITY AND/ OR FUNCTIONALITY AND THEREFORE DO NOT INCREASE THE DEGREE OF NON-COMPLIANCE OF THE STRUCTURE.
   - G102.1.10.2: THE PROPOSED PILE ENCASEMENTS ARE DESIGNED TO BE IMMERSED IN WATER AND TO ENHANCE THE LONG TERM DURABILITY OF THE PRE-FIRM PILES USING NEW MATERIALS AND THEREFORE DO NOT INCREASE THE DEGREE OF NON-COMPLIANCE.
   - G102.1.10.3: THERE IS NO CHANGE IN USE OR OCCUPANCY OF THE STRUCTURE, THEREFORE NOT INCREASING THE DEGREE OF NON-COMPLIANCE.
3. SINCE THE DEGREE OF NON-COMPLIANCE OF THE STRUCTURE HAS NOT INCREASED, THE CONDITIONS OF APPLICABILITY ARE NOT MET AND THEREFORE, THE STRUCTURE IS NOT SUBJECT TO THE REQUIREMENTS OF TITLE 28 APPENDIX G OR ASCE24-05.

EPOXY MORTAR/ CEMENTITIOUS GROUT

1. CONTRACTOR SHALL SUBMIT ALL PROPOSED MATERIALS FOR THE ENCASEMENTS FOR APPROVAL PRIOR TO STARTING THE WORK.
2. CONTRACTOR SHALL CLEAN AND PREPARE ALL SURFACES TO BE ENCASED IN EPOXY MORTAR/ CEMENTITIOUS GROUT. IN ACCORDANCE WITH THE SPECIFICATIONS AND AS APPROVED BY THE OWNER'S REPRESENTATIVE.
3. THE EPOXY MORTAR/ CEMENTITIOUS GROUT FOR THE ENCASEMENTS SHALL BE PLACED INSIDE THE FORMWORK WITHIN 72 HOURS OF THE CLEANING OF THE PILE, UNLESS OTHERWISE APPROVED BY THE OWNER'S REPRESENTATIVE. JUST PRIOR TO PLACEMENT OF THE MATERIAL, THE EXISTING PILE AND ENCASEMENT SHALL UNDERGO A FINAL CLEANING TO REMOVE ANY MARINE GROWTH OR DEBRIS THAT MAY HAVE ENTERED THE FORMWORK AFTER THE INITIAL CLEANING AND SHALL BE THOROUGHLY RINSED WITH FRESH WATER.
4. EACH ENCASEMENT SHALL BE PLACED IN A CONTINUOUS MANNER FROM START TO FINISH. HORIZONTAL CONSTRUCTION JOINTS ARE PROHIBITED.
5. INSTALLED WORK FOUND TO HAVE VOIDS OR NON-EVENLY DISTRIBUTED MATERIAL WILL BE REJECTED. REJECTED WORK SHALL BE REMOVED BY THE CONTRACTOR AND REPLACED WITH THE REPAIR SHOWN ON THE REPAIR SCHEDULE AS DIRECTED BY THE OWNER'S REPRESENTATIVE AT NO ADDITIONAL COST TO THE OWNER.

MATERIALS

1. EPOXY MORTAR/CEMENTITIOUS GROUT
   A. EPOXY MORTAR/CEMENTITIOUS GROUT SHALL HAVE A MINIMUM COMPRESSIVE STRENGTH (F'C) OF 6000 PSI.
   B. EPOXY MORTAR/CEMENTITIOUS GROUT AND FORMWORK SHALL BE SUITABLE FOR PLACEMENT IN THE MARINE ENVIRONMENT (FULL IMMERSION IN SALT WATER) VIA PUMPING, AND SHALL BE MANUFACTURED BY ONE OF THE FOLLOWING COMPANIES OR AN APPROVED SUBSTITUTION:
      a. BASF BUILDING SYSTEMS OF SHAKOPEE, MN
      b. FIVE STAR PRODUCTS OF SHELTON, CT
      c. SIKA CORPORATION OF LYNDHURST, NJ
      d. SIMPSON STRONG TIE OF PLEASANTON, CA
      e. DENSO NORTH AMERICA OF HOUSTON, TX
2. CEMENTITIOUS HAND PACK SHALL BE SPEEDCRETE BLUE LINE MANUFACTURED BY EUCLID CHEMICAL OF CLEVELAND, OH OR APPROVED EQUAL.
3. FORMWORK SHALL BE A MINIMUM OF 1/8TH INCH THICK TRANSLUCENT RIGID FIBERGLASS REINFORCED PLASTIC (FRP). FORMS SHALL HAVE SUFFICIENT STRENGTH TO WITHSTAND THE PRESSURE RESULTING FROM ALL ENVIRONMENTAL FORCES PRIOR TO THE PLACEMENT OF CONCRETE AS WELL AS FORCES EXERTED DURING THE PLACEMENT OF CONCRETE AND SHALL HAVE SUFFICIENT RIGIDITY TO MAINTAIN SPECIFIED TOLERANCES.
4. ALL REINFORCEMENT BARS SHALL CONFORM TO ASTM A615, EPOXY COATED IN ACCORDANCE WITH A775. ALL REINFORCING SHALL BE GRADE 60 STEEL WITH FY = 60 KSI.

PROJECT DATUM

1. VERTICAL DATUM FOR THIS PROJECT IS NAVD88. ALL ELEVATIONS SHOWN ON DRAWINGS ARE IN THIS DATUM SYSTEM.
2. MBD REFERENCES THE MANHATTAN BOROUGH DATUM.

DATUMS (FT)	MLLW	NAVD88	MBD
HIGHEST OBSERVED WATER LEVEL (10/30/2012)	14.04	11.26	9.61
MEAN HIGHER HIGH WATER (MHHW)	5.05	2.28	0.63
MEAN HIGH WATER (MHW)	4.73	1.96	0.31
BOROUGH PRESIDENT OF MANHATTAN (MBD)	4.43	1.65	0.00
NAVD88	2.77	0.00	-1.65
MEAN SEA LEVEL (MSL)	2.57	-0.21	-1.86
MEAN TIDE LEVEL (MTL)	2.47	-0.31	-1.96
MEAN LOW WATER (MLW)	0.21	-2.57	-4.22
MEAN LOWER LOW WATER (MLLW)	0.00	-2.77	-4.43
LOWEST OBSERVED WATER LEVEL (2/2/1976)	-4.29	-7.06	-8.71

3. NOAA STATION ID 8518750 (THE BATTERY) WAS UTILIZED IN DATUM CONVERSION CALCULATIONS.

INSPECTIONS

1. PROVIDE PROGRESS INSPECTIONS AS PER NYC SBS REQUIREMENTS:
   A. FINAL INSPECTION
2. PROVIDE SPECIAL INSPECTIONS AS PER NYC DOB REQUIREMENTS:
   A. FLOOD ZONE COMPLIANCE

100% DESIGN SUBMISSION
ISSUED: 2020-05-13

OWNER/ CLIENT

NEW YORK STATE OF OPPORTUNITY. | Battery Park City Authority

PRIME CONSULTANT

m&n engineering, p.c.
529 FIFTH AVENUE, 14TH FLOOR
NEW YORK, NY 10017
(212) 768-7454

NO.	REVISION	APP'D	DATE
B	100% SUBMISSION	SF	05/13/20
A	60% SUBMISSION	SF	04/24/20

KEY PLAN

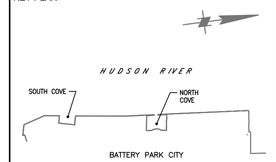

PROJECT

BATTERY PARK CITY AUTHORITY PHASE VII PILE REMEDIATION
ROCKEFELLER PARK, ESPLANADE PLAZA AND WAGNER PARK

DRAWING TITLE

GENERAL NOTES

DOB IDENTIFICATION NUMBER

--

SEAL & SIGNATURE



STEPHEN D. FRECH, P.E.
NYS LIC # 082397

DATE: MAY 2020
PROJECT NO. 10957
DRAWN BY ME
CHECKED BY DJ
DRAWING NO. **G-004**
SHEET NO. 4 of 15

BSCAN

DOB APPROVAL STAMP

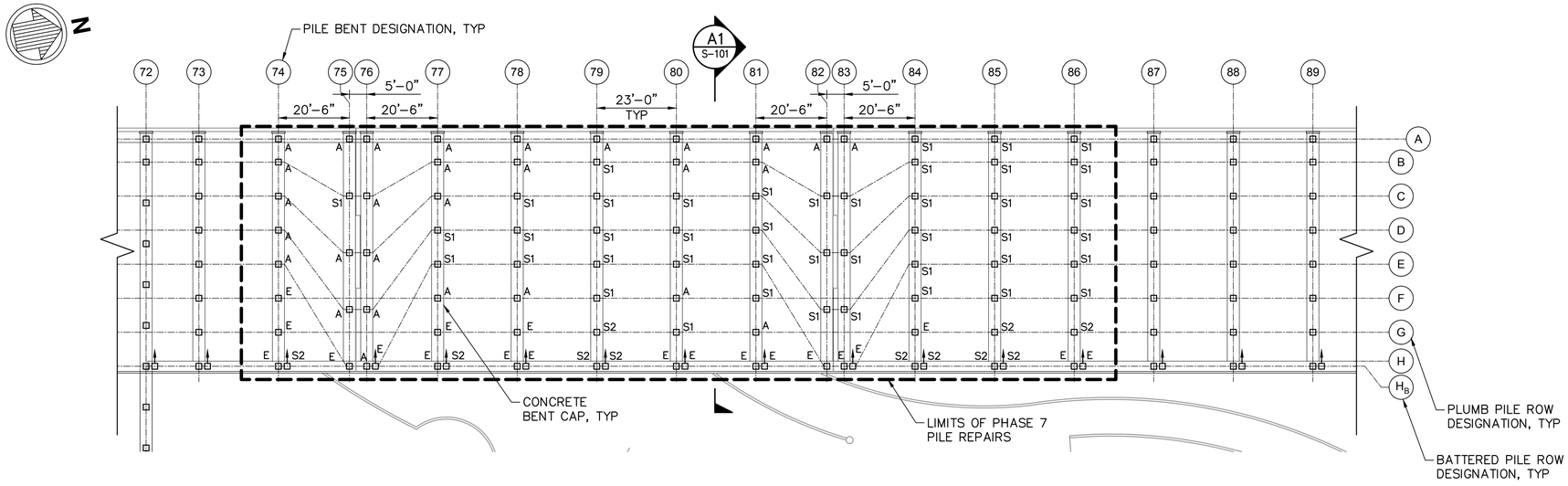

B1 / S-101 PILE REMEDIATION PLAN – ROCKEFELLER PARK
SCALE: 1"=20'

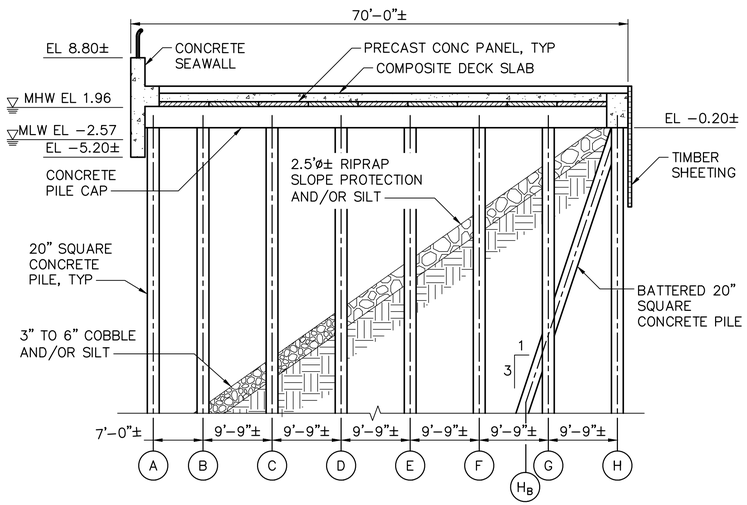

A1 / S-101 EXISTING SECTION
SCALE: 3/32"=1'-0"

GENERAL NOTES:

1. ALL PILES SHOWN ARE 20" SQUARE CONCRETE.
2. LIMIT OF WORK FOR PHASE 7 (ROCKEFELLER PARK) PILE REHABILITATION WORK IS BENTS 74 TO 86.
3. CONTRACTOR SHALL CONFIRM BENT NUMBERING SYSTEM WITH THE OWNER'S REPRESENTATIVE PRIOR TO ORDERING ANY MATERIALS OR COMMENCEMENT OF ANY WORK.
4. MUDLINE SHOWN IN SECTIONS REPRESENTS GENERAL CONDITIONS. THERE IS SIGNIFICANT SILTATION AT SOME PILE LOCATIONS. SEE REPAIR SCHEDULE FOR MUDLINE TYPE AND REQUIRED REPAIR AT EACH PILE.
5. FOR INSTANCES WHERE TWO ADJACENT S-TYPE REPAIRS OCCUR AT THE PLUMB AND BATTER PILES AT THE INBOARD ROW, REFER TO DETAIL A4 ON S-502 FOR PLUMB PILE REPAIR. FOR THE BATTER PILE REPAIR, REFER TO DETAIL C2 ON S-502, ADJUSTING FORMWORK LENGTH AS NECESSARY.

LEGEND:

- BATTERED PILE
- A — 20" SQUARE CONCRETE PILE
  - REPAIR TYPE (SEE REPAIR SCHEDULE FOR REQUIRED LENGTHS).

16'-0" 0'-0" 8'-0" 16'-0"
SCALE: 3/32"=1'-0"

20' 0' 20' 40'
SCALE: 1"=20'

100% DESIGN SUBMISSION
ISSUED: 2020-05-13

OWNER/ CLIENT
NEW YORK STATE OF OPPORTUNITY. Battery Park City Authority

PRIME CONSULTANT
m&n engineering, p.c.
529 FIFTH AVENUE, 14TH FLOOR
NEW YORK, NY 10017
(212) 768-7454

NO.	REVISION	APP'D	DATE
B	100% SUBMISSION	SF	05/13/20
A	60% SUBMISSION	SF	04/24/20

KEY PLAN

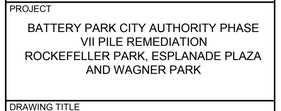

PROJECT
BATTERY PARK CITY AUTHORITY PHASE VII PILE REMEDIATION
ROCKEFELLER PARK, ESPLANADE PLAZA AND WAGNER PARK

DRAWING TITLE
ROCKEFELLER PARK
REPAIR PLAN, SECTIONS, AND LOCATION KEY

DOB IDENTIFICATION NUMBER
--

SEAL & SIGNATURE
STATE OF NEW YORK · STEPHEN DAVID FRECH · No. 082397 · LICENSED PROFESSIONAL ENGINEER
STEPHEN D. FRECH, P.E.
NYS LIC # 082397

DATE: MAY 2020
PROJECT NO. 10957
DRAWN BY ME
CHECKED BY DJ
DRAWING NO. **S-101**
SHEET NO. 5 of 15

BSCAN

DOB APPROVAL STAMP

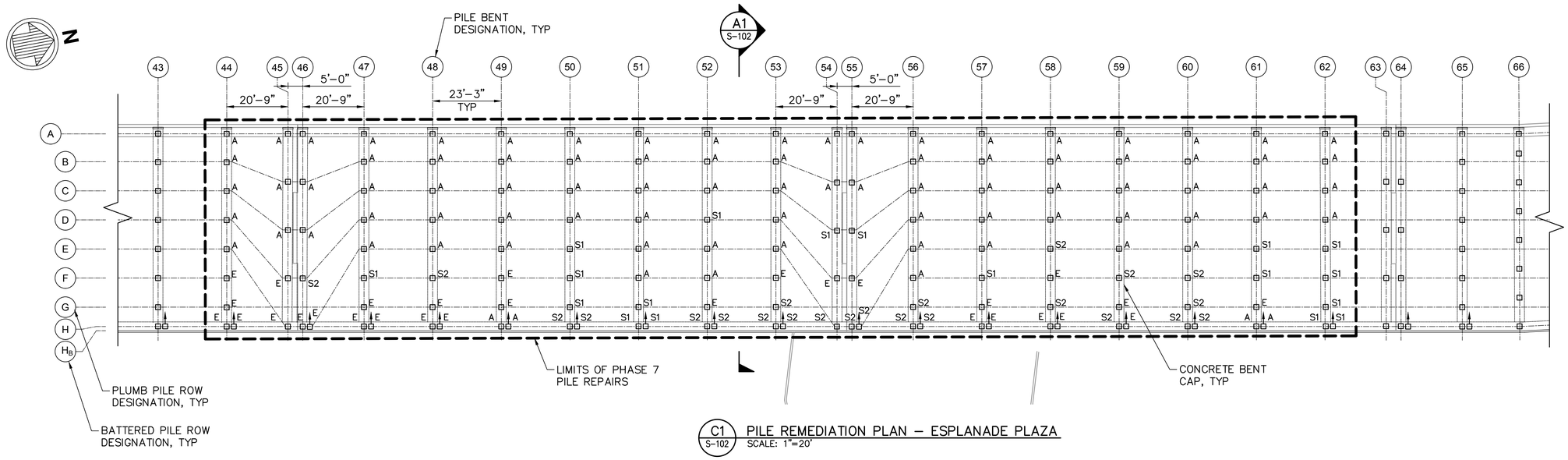

C1 S-102 PILE REMEDIATION PLAN – ESPLANADE PLAZA
SCALE: 1"=20'

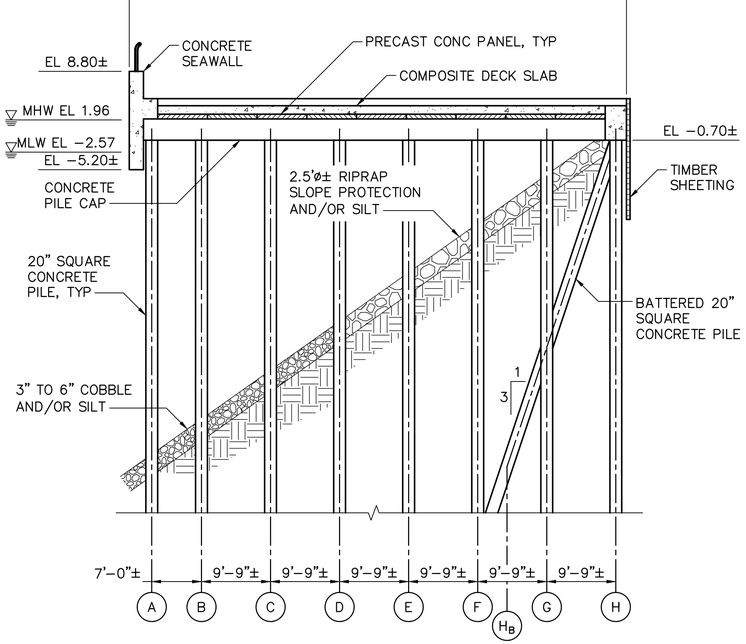

A1 S-102 EXISTING SECTION
SCALE: 3/32"=1'-0"

GENERAL NOTES:

1. ALL PILES SHOWN ARE 20" SQUARE CONCRETE.
2. LIMIT OF WORK FOR PHASE 7 (ESPLANADE PLAZA) PILE REHABILITATION WORK IS BENTS 44 TO 62.
3. CONTRACTOR SHALL CONFIRM BENT NUMBERING SYSTEM WITH THE OWNER'S REPRESENTATIVE PRIOR TO ORDERING ANY MATERIALS OR COMMENCEMENT OF ANY WORK.
4. MUDLINE SHOWN IN SECTIONS REPRESENTS GENERAL CONDITIONS. THERE IS SIGNIFICANT SILTATION AT SOME PILE LOCATIONS. SEE REPAIR SCHEDULE FOR MUDLINE TYPE AND REQUIRED REPAIR AT EACH PILE.
5. FOR INSTANCES WHERE TWO ADJACENT S–TYPE REPAIRS OCCUR AT THE PLUMB AND BATTER PILES AT THE INBOARD ROW, REFER TO DETAIL A4 ON S–502 FOR PLUMB PILE REPAIR. FOR THE BATTER PILE REPAIR, REFER TO DETAIL C2 ON S–502, ADJUSTING FORMWORK LENGTH AS NECESSARY.

LEGEND:

- BATTERED PILE
- A — 20" SQUARE CONCRETE PILE
  - REPAIR TYPE (SEE REPAIR SCHEDULE FOR REQUIRED LENGTHS).

16'-0" 0'-0" 8'-0" 16'-0"
SCALE: 3/32"=1'-0"

20' 0' 20' 40'
SCALE: 1"=20'

100% DESIGN SUBMISSION
ISSUED: 2020-05-13

OWNER/ CLIENT
NEW YORK STATE OF OPPORTUNITY. Battery Park City Authority

PRIME CONSULTANT
m&n engineering, p.c.
529 FIFTH AVENUE, 14TH FLOOR
NEW YORK, NY 10017
(212) 768-7454

NO.	REVISION	APP'D	DATE
B	100% SUBMISSION	SF	05/13/20
A	60% SUBMISSION	SF	04/24/20

KEY PLAN

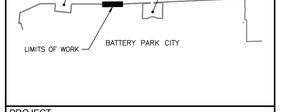

PROJECT
BATTERY PARK CITY AUTHORITY PHASE VII PILE REMEDIATION
ROCKEFELLER PARK, ESPLANADE PLAZA AND WAGNER PARK

DRAWING TITLE
ESPLANADE PLAZA REPAIR PLAN, SECTIONS, AND LOCATION KEY

DOB IDENTIFICATION NUMBER
--

SEAL & SIGNATURE
STATE OF NEW YORK STEPHEN DAVID FRECH No. 082397 LICENSED PROFESSIONAL ENGINEER
STEPHEN D. FRECH, P.E.
NYS LIC # 082397

DATE: MAY 2020
PROJECT NO. 10957
DRAWN BY ME
CHECKED BY DJ
DRAWING NO. **S-102**
SHEET NO. 6 of 15

BSCAN

DOB APPROVAL STAMP

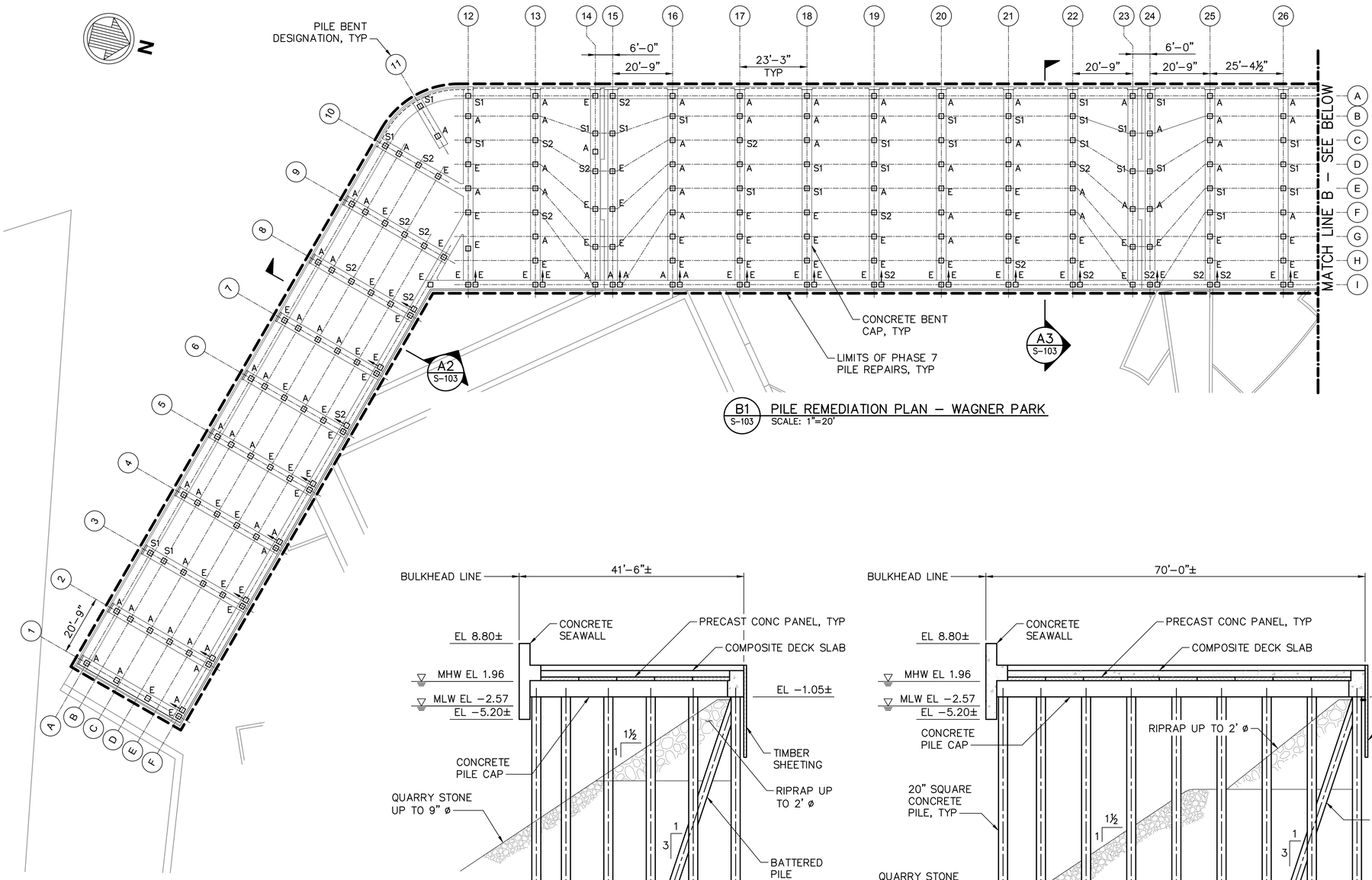

B1 S-103 PILE REMEDIATION PLAN – WAGNER PARK
SCALE: 1"=20'

A2 S-103 EXISTING SECTION
SCALE: 3/32"=1'-0"

A3 S-103 EXISTING SECTION
SCALE: 3/32"=1'-0"

GENERAL NOTES:

1. ALL PILES SHOWN ARE 20" SQUARE CONCRETE.
2. LIMIT OF WORK FOR PHASE 7 (WAGNER PARK) PILE REHABILITATION WORK IS BENTS 1 TO 50.
3. CONTRACTOR SHALL CONFIRM BENT NUMBERING SYSTEM WITH THE OWNER'S REPRESENTATIVE PRIOR TO ORDERING ANY MATERIALS OR COMMENCEMENT OF ANY WORK.
4. MUDLINE SHOWN IN SECTIONS REPRESENTS GENERAL CONDITIONS. THERE IS SIGNIFICANT SILTATION AT SOME PILE LOCATIONS. SEE REPAIR SCHEDULE FOR MUDLINE TYPE AND REQUIRED REPAIR AT EACH PILE.
5. FOR INSTANCES WHERE TWO ADJACENT S–TYPE REPAIRS OCCUR AT THE PLUMB AND BATTER PILES AT THE INBOARD ROW, REFER TO DETAIL A4 ON S–502 FOR PLUMB PILE REPAIR. FOR THE BATTER PILE REPAIR, REFER TO DETAIL C2 ON S–502, ADJUSTING FORMWORK LENGTH AS NECESSARY.

LEGEND:

- BATTERED PILE
- A — 20" SQUARE CONCRETE PILE; REPAIR TYPE (SEE REPAIR SCHEDULE FOR REQUIRED LENGTHS).
- N/A – NOT ACCESSIBLE FOR INSPECTION OR REPAIR

20' 0' 20' 40'
SCALE: 1"=20'

100% DESIGN SUBMISSION
ISSUED: 2020-05-13

OWNER/ CLIENT
NEW YORK STATE OF OPPORTUNITY. Battery Park City Authority

PRIME CONSULTANT
m&n engineering, p.c.
529 FIFTH AVENUE, 14TH FLOOR
NEW YORK, NY 10017
(212) 768-7454

NO.	REVISION	APP'D	DATE
B	100% SUBMISSION	SF	05/13/20
A	60% SUBMISSION	SF	04/24/20

KEY PLAN

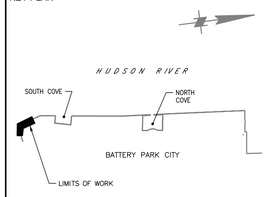

PROJECT
BATTERY PARK CITY AUTHORITY PHASE VII PILE REMEDIATION
ROCKEFELLER PARK, ESPLANADE PLAZA AND WAGNER PARK

DRAWING TITLE
WAGNER PARK REPAIR PLAN, SECTIONS, AND LOCATION KEY (SHEET 1 OF 2)

DOB IDENTIFICATION NUMBER
--

SEAL & SIGNATURE
STATE OF NEW YORK STEPHEN DAVID FRECH No. 082397 LICENSED PROFESSIONAL ENGINEER
STEPHEN D. FRECH, P.E.
NYS LIC # 082397

DATE: MAY 2020
PROJECT NO. 10957
DRAWN BY ME
CHECKED BY DJ
DRAWING NO. **S-103**
SHEET NO. 7 of 15

BSCAN

DOB APPROVAL STAMP

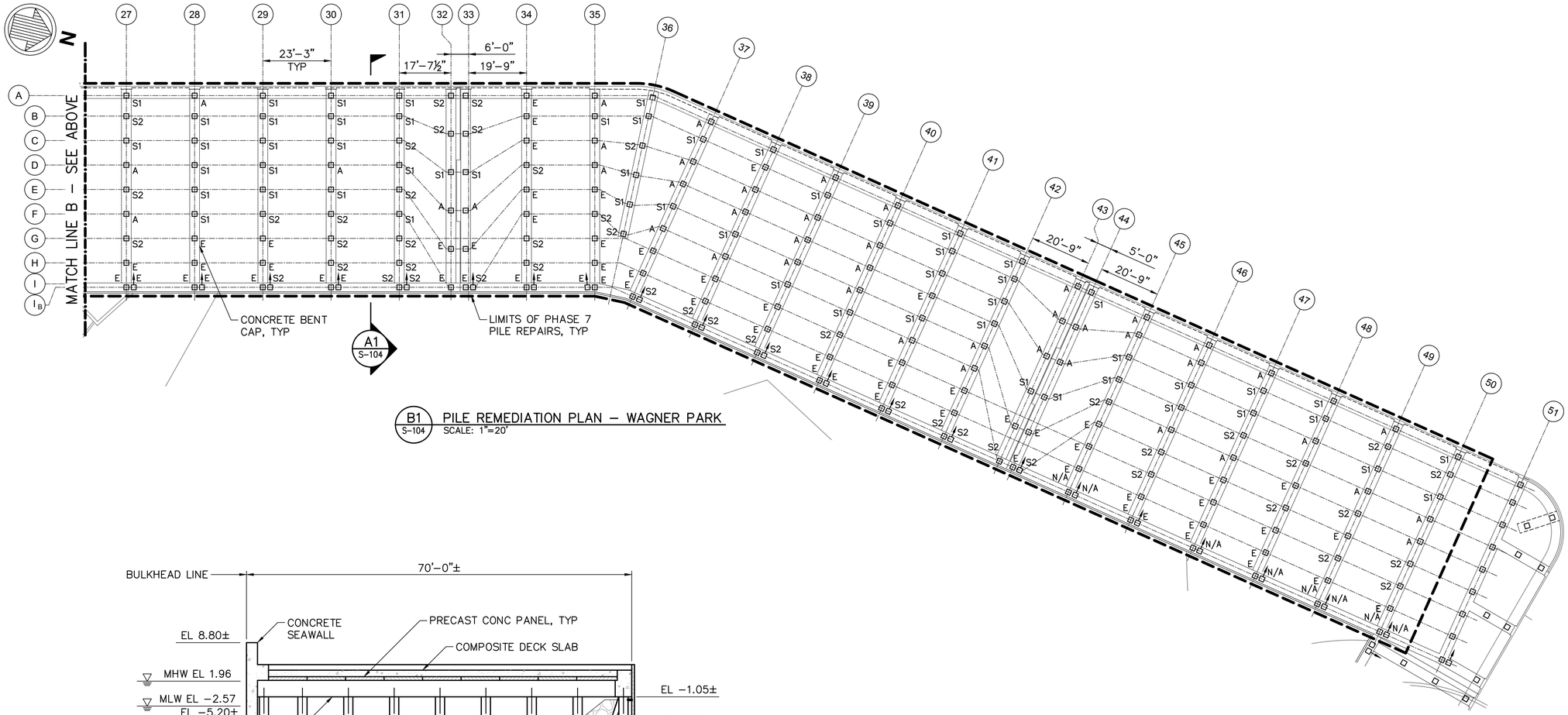

B1 S–104 PILE REMEDIATION PLAN – WAGNER PARK
SCALE: 1"=20'

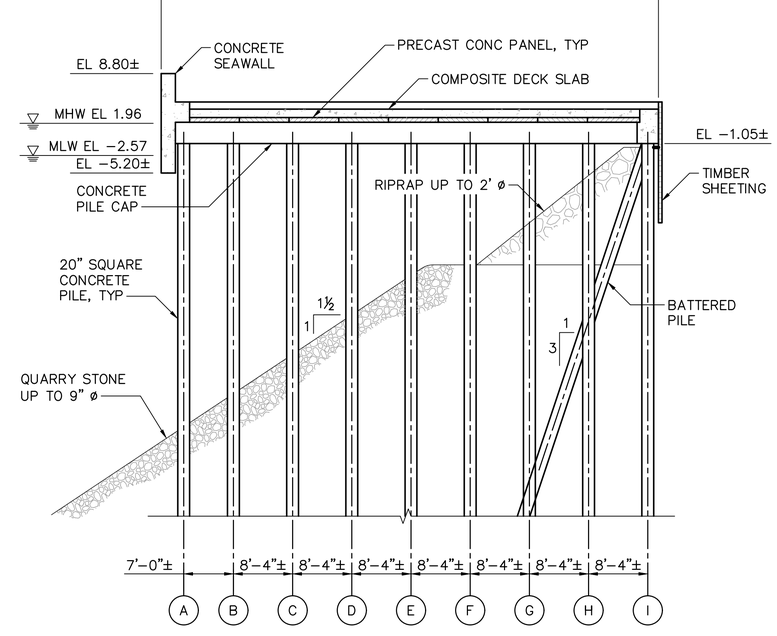

A1 S–104 EXISTING SECTION
SCALE: 3/32"=1'–0"

GENERAL NOTES:

1. ALL PILES SHOWN ARE 20" SQUARE CONCRETE.
2. LIMIT OF WORK FOR PHASE 7 (WAGNER PARK) PILE REHABILITATION WORK IS BENTS 1 TO 50.
3. CONTRACTOR SHALL CONFIRM BENT NUMBERING SYSTEM WITH THE OWNER'S REPRESENTATIVE PRIOR TO ORDERING ANY MATERIALS OR COMMENCEMENT OF ANY WORK.
4. MUDLINE SHOWN IN SECTIONS REPRESENTS GENERAL CONDITIONS. THERE IS SIGNIFICANT SILTATION AT SOME PILE LOCATIONS. SEE REPAIR SCHEDULE FOR MUDLINE TYPE AND REQUIRED REPAIR AT EACH PILE.
5. FOR INSTANCES WHERE TWO ADJACENT S–TYPE REPAIRS OCCUR AT THE PLUMB AND BATTER PILES AT THE INBOARD ROW, REFER TO DETAIL A4 ON S–502 FOR PLUMB PILE REPAIR. FOR THE BATTER PILE REPAIR, REFER TO DETAIL C2 ON S–502, ADJUSTING FORMWORK LENGTH AS NECESSARY.

LEGEND:

- BATTERED PILE
- 20" SQUARE CONCRETE PILE
  - A — REPAIR TYPE (SEE REPAIR SCHEDULE FOR REQUIRED LENGTHS).
- N/A – NOT ACCESSIBLE FOR INSPECTION OR REPAIR

20' 0' 20' 40'
SCALE: 1"=20'

100% DESIGN SUBMISSION
ISSUED: 2020-05-13

OWNER/ CLIENT
NEW YORK STATE OF OPPORTUNITY. Battery Park City Authority

PRIME CONSULTANT
m&n engineering, p.c.
529 FIFTH AVENUE, 14TH FLOOR
NEW YORK, NY 10017
(212) 768-7454

NO.	REVISION	APP'D	DATE
B	100% SUBMISSION	SF	05/13/20
A	60% SUBMISSION	SF	04/24/20

KEY PLAN

PROJECT
BATTERY PARK CITY AUTHORITY PHASE VII PILE REMEDIATION
ROCKEFELLER PARK, ESPLANADE PLAZA AND WAGNER PARK

DRAWING TITLE
WAGNER PARK REPAIR PLAN, SECTIONS, AND LOCATION KEY (SHEET 2 OF 2)

DOB IDENTIFICATION NUMBER
--

SEAL & SIGNATURE
STATE OF NEW YORK · STEPHEN DAVID FRECH · No. 082397 · LICENSED PROFESSIONAL ENGINEER
STEPHEN D. FRECH, P.E.
NYS LIC # 082397

DATE: MAY 2020
PROJECT NO. 10957
DRAWN BY ME
CHECKED BY DJ
DRAWING NO. **S-104**
SHEET NO. 8 of 15

BSCAN

DOB APPROVAL STAMP

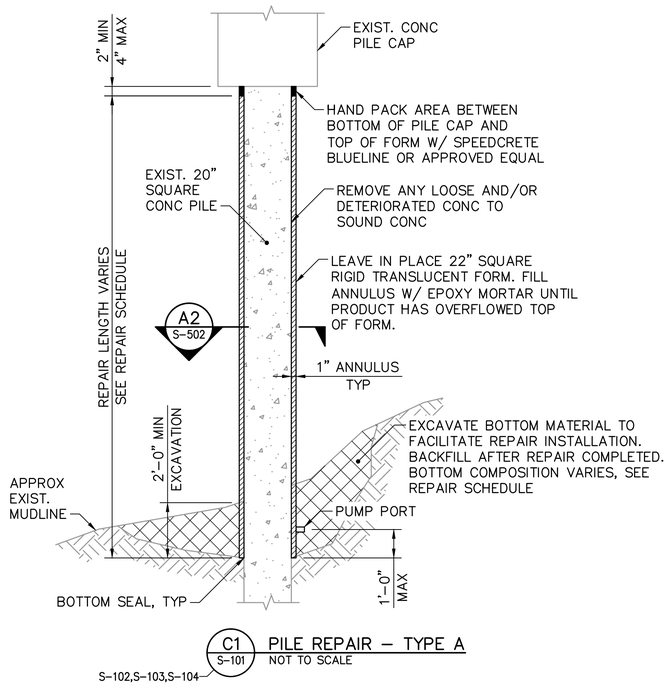

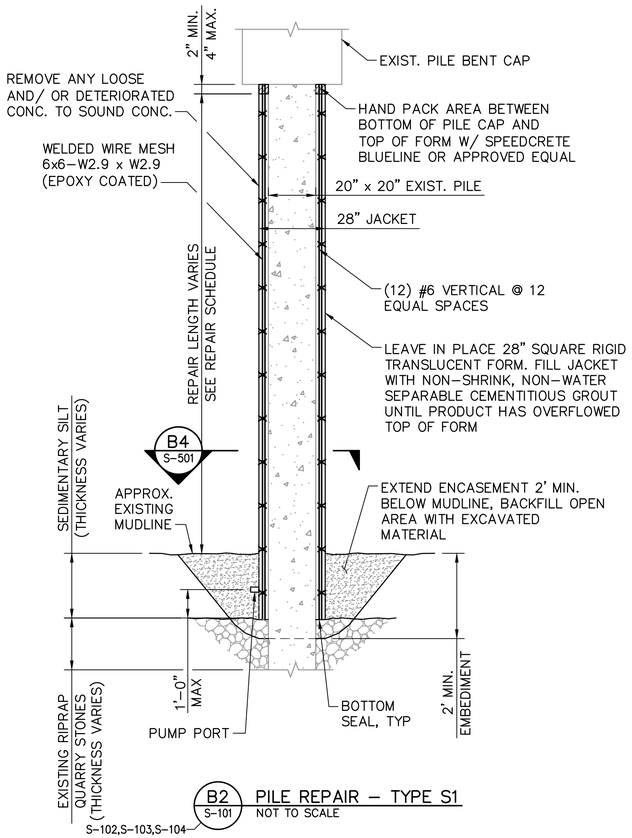

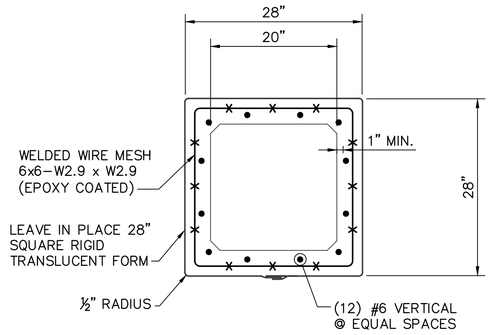

B4 S-501 CROSS–SECTION REPAIR – TYPE S1 & S2
NOT TO SCALE

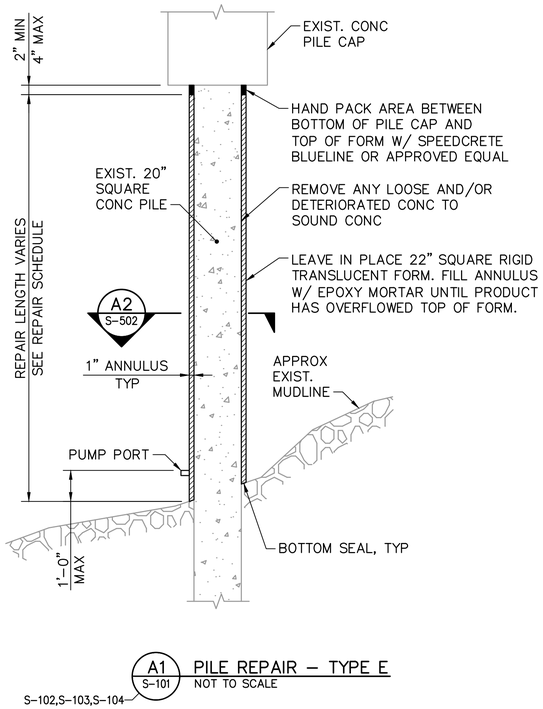

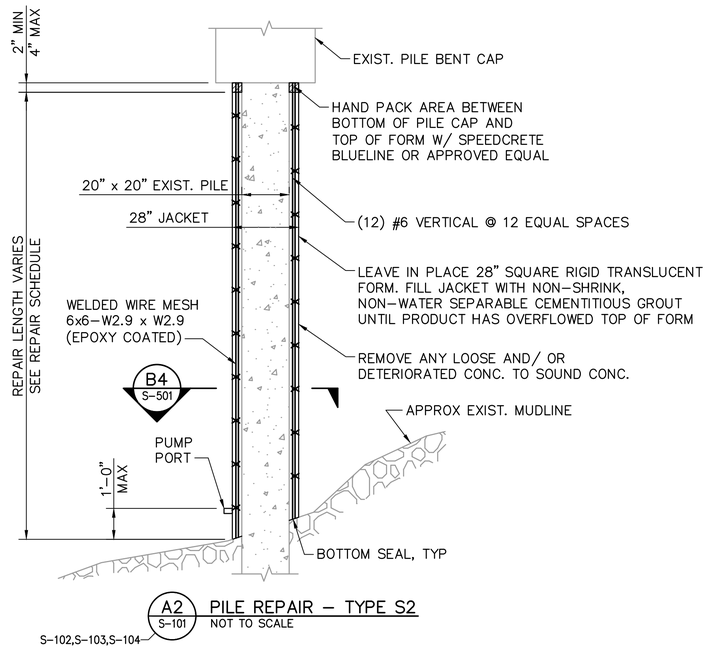

100% DESIGN SUBMISSION
ISSUED: 2020-05-13

GENERAL NOTES:

1. USE APPROVED SPACERS TO MAINTAIN REQUIRED ANNULUS ON ALL 4 SIDES OF PILE DURING ALL PHASES OF REPAIR INSTALLATION.
2. FORMWORK SHALL SUPPORT ALL CONSTRUCTION AND ENVIRONMENTAL LOADINGS DURING ALL PHASES OF REPAIR INSTALLATION.
3. STRUCTURAL INTEGRITY OF FORMWORK DURING ALL PHASES OF CONSTRUCTION IS SOLE RESPONSIBILITY OF THE CONTRACTOR.
4. ONE PUMP PORT IS SHOWN FOR REPRESENTATIVE PURPOSES ONLY. TOTAL QUANTITY, SPACING, AND LOCATION OF PUMP PORTS IS SOLE RESPONSIBILITY OF CONTRACTOR. LOCATION OF PUMP PORTS SHALL ENSURE EPOXY MORTAR/ CEMENTITIOUS GROUT IS PLACED UNIFORMLY WITH NO VOIDS OVER FULL HEIGHT OF REPAIR. CONTRACTOR SHALL SUBMIT TYPICAL PUMP PORT AND PUMP PORT LAYOUT PRIOR TO COMMENCEMENT OF WORK. PUMPING SHALL BEGIN AT THE LOWEST ELEVATION PORT.
5. CONTRACTOR SHALL NOT USE EARTH IN LIEU OF FORMWORK AT BOTTOM OF REPAIR.
6. THE EXCAVATIONS PROPOSED DO NOT AFFECT THE STRUCTURAL STABILITY OF THE EXISTING STRUCTURES OR ANY ADJACENT STRUCTURES.

OWNER/ CLIENT
NEW YORK STATE OF OPPORTUNITY. Battery Park City Authority

PRIME CONSULTANT
m&n engineering, p.c.
529 FIFTH AVENUE, 14TH FLOOR
NEW YORK, NY 10017
(212) 768-7454

NO.	REVISION	APP'D	DATE
B	100% SUBMISSION	SF	05/13/20
A	60% SUBMISSION	SF	04/24/20

KEY PLAN

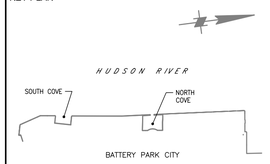

PROJECT
BATTERY PARK CITY AUTHORITY PHASE VII PILE REMEDIATION
ROCKEFELLER PARK, ESPLANADE PLAZA AND WAGNER PARK

DRAWING TITLE
REPAIR DETAILS (SHEET 1 OF 2)

DOB IDENTIFICATION NUMBER
--

SEAL & SIGNATURE
STATE OF NEW YORK · STEPHEN DAVID FRECH · No. 082397 · LICENSED PROFESSIONAL ENGINEER
STEPHEN D. FRECH, P.E.
NYS LIC # 082397

DATE: MAY 2020
PROJECT NO. 10957
DRAWN BY ME
CHECKED BY DJ
DRAWING NO. S-501
SHEET NO. 9 of 15

BSCAN

DOB APPROVAL STAMP

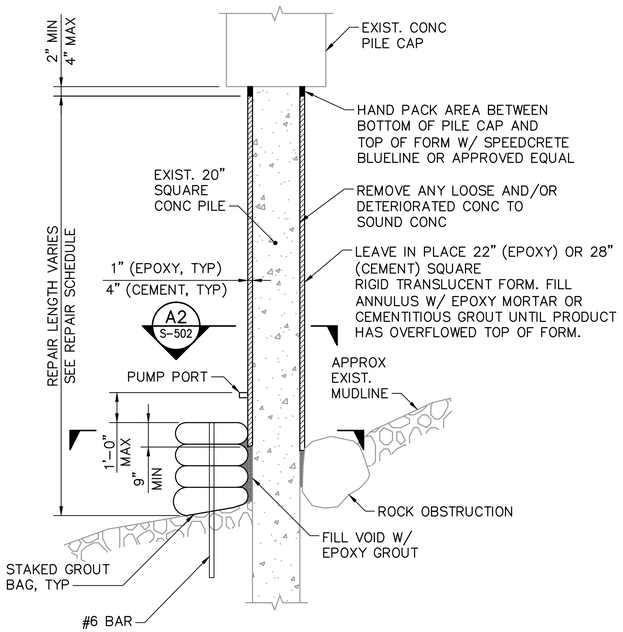

ELEVATION

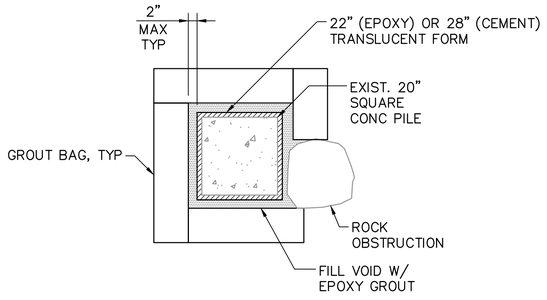

SECTION

NOTES:
1. TYPE E REPAIR IS SHOWN. TYPE S2 ALTERNATIVE IS SIMILAR. REFER TO TYPE S2 REPAIR FOR BOTTOM SEAL CONDITIONS, FORM SIZE, AND MATERIAL INFORMATION.
2. FORM WORK SHALL EXTEND DOWN TO TOP OF IN PLACE RIP RAP. CONTRACTOR SHALL UTILIZE GROUT BAGS WHERE REQUIRED TO ENSURE THAT NO LENGTH OF EXPOSED CONCRETE PILE REMAINS AFTER REPAIR IS INSTALLED.
3. GROUT BAGS SHALL OVERLAP A MINIMUM OF 9" ONTO INSTALLED FORM WORK.
4. CONTRACTOR SHALL SUBMIT GROUT BAG MATERIALS AND PLACEMENT PLAN PRIOR TO INSTALLATION OF THIS ALTERNATIVE.
5. EACH PILE REQUIRING THIS ALTERNATIVE REPAIR MUST BE APPROVED BY OWNER'S REPRESENTATIVE PRIOR TO ITS INSTALLATION.

A1 S-502 PILE REPAIR – TYPE E, S2 – ALTERNATIVE
NOT TO SCALE

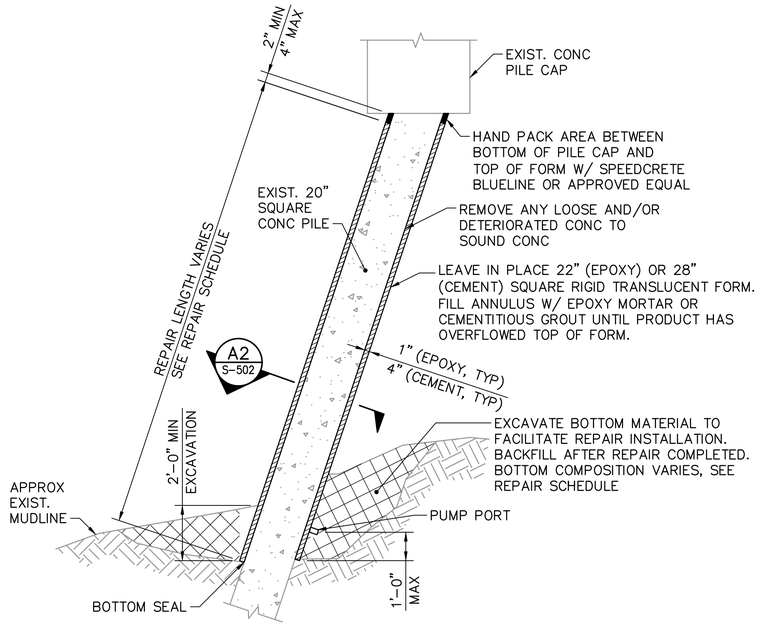

NOTE:
1. TYPE A REPAIR IS SHOWN. TYPES S1, S2, AND E BATTER REPAIRS ARE SIMILAR. REFER TO INDIVIDUAL PLUMB PILE DETAILS FOR BOTTOM SEAL CONDITIONS, FORM SIZE, AND MATERIAL INFORMATION.

C2 S-502 BATTER PILE REPAIR – ALL TYPES
SCALE: NOT TO SCALE

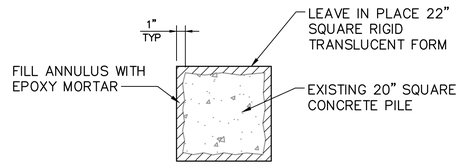

A2 S-502 REPAIR CROSS–SECTION – TYPE A & E
SCALE: NOT TO SCALE
S-501

GENERAL NOTES:
1. USE APPROVED SPACERS TO MAINTAIN REQUIRED ANNULUS ON ALL 4 SIDES OF PILE DURING ALL PHASES OF REPAIR INSTALLATION.
2. FORMWORK SHALL SUPPORT ALL CONSTRUCTION AND ENVIRONMENTAL LOADINGS DURING ALL PHASES OF REPAIR INSTALLATION.
3. STRUCTURAL INTEGRITY OF FORMWORK DURING ALL PHASES OF CONSTRUCTION IS SOLE RESPONSIBILITY OF THE CONTRACTOR.
4. ONE PUMP PORT IS SHOWN FOR REPRESENTATIVE PURPOSES ONLY. TOTAL QUANTITY, SPACING, AND LOCATION OF PUMP PORTS IS SOLE RESPONSIBILITY OF CONTRACTOR. LOCATION OF PUMP PORTS SHALL ENSURE EPOXY MORTAR/ CEMENTITIOUS GROUT IS PLACED UNIFORMLY WITH NO VOIDS OVER FULL HEIGHT OF REPAIR. CONTRACTOR SHALL SUBMIT TYPICAL PUMP PORT AND PUMP PORT LAYOUT PRIOR TO COMMENCEMENT OF WORK. PUMPING SHALL BEGIN AT THE LOWEST ELEVATION PORT.
5. CONTRACTOR SHALL NOT USE EARTH IN LIEU OF FORMWORK AT BOTTOM OF REPAIR.
6. THE EXCAVATIONS PROPOSED DO NOT AFFECT THE STRUCTURAL STABILITY OF THE EXISTING STRUCTURES OR ANY ADJACENT STRUCTURES.

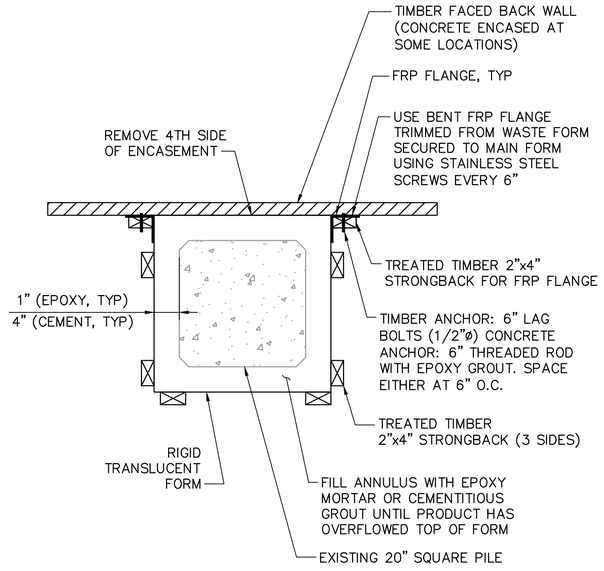

NOTE:
1. APPLICABLE WHEN ONLY THREE SIDES OF THE PILE ARE ACCESSIBLE DUE TO SHEETING INTERFERENCE. THIS ALTERNATE DETAIL CAN BE APPLIED FOR ALL REPAIR TYPES. REFER TO INDIVIDUAL PLUMB PILE REPAIRS FOR BOTTOM SEAL CONDITIONS, FORM SIZE, AND MATERIAL INFORMATION.

A4 S-502 3–SIDED ENCASEMENT ALTERNATE DETAIL
NOT TO SCALE

100% DESIGN SUBMISSION
ISSUED: 2020-05-13

OWNER/ CLIENT
NEW YORK STATE OF OPPORTUNITY. Battery Park City Authority

PRIME CONSULTANT
m&n engineering, p.c.
529 FIFTH AVENUE, 14TH FLOOR
NEW YORK, NY 10017
(212) 768-7454

NO.	REVISION	APP'D	DATE
B	100% SUBMISSION	SF	05/13/20
A	60% SUBMISSION	SF	04/24/20

KEY PLAN
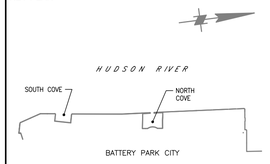

PROJECT
BATTERY PARK CITY AUTHORITY PHASE VII PILE REMEDIATION
ROCKEFELLER PARK, ESPLANADE PLAZA AND WAGNER PARK

DRAWING TITLE
REPAIR DETAILS (SHEET 2 OF 2)

DOB IDENTIFICATION NUMBER
--

SEAL & SIGNATURE
STATE OF NEW YORK STEPHEN DAVID FRECH No. 082397 LICENSED PROFESSIONAL ENGINEER
STEPHEN D. FRECH, P.E.
NYS LIC # 082397

DATE: MAY 2020
PROJECT NO. 10957
DRAWN BY ME
CHECKED BY DJ
DRAWING NO. S-502
SHEET NO. 10 of 15

BSCAN

DOB APPROVAL STAMP

ROCKEFELLER PLAZA						
BENT NO.	PILE	REPAIR TYPE	REPAIR LENGTH	REPAIR DETAIL	MUDLINE CONDITION	TYPICAL ROCK SIZE (IN. DIAM.)
74	A	EPOXY	34	A	SILT/GRAVEL	
74	B	EPOXY	30	A	SILT/GRAVEL	
74	C	EPOXY	19	A	SILT/GRAVEL	
74	D	EPOXY	14	A	SILT/GRAVEL	
74	E	EPOXY	11	A	RIPRAP	6–12
74	F	EPOXY	10	E	RIPRAP	24–36
74	G	EPOXY	8	E	RIPRAP	24–36
74	H	EPOXY	2	E	RIPRAP	12–24
74	Hb	CEMENT	2	S2	RIPRAP	12–24
75	A	EPOXY	33	A	SILT/GRAVEL	
75	B	CEMENT	19	S1	SILT/GRAVEL	
75	C	EPOXY	12	A	SILT/GRAVEL	
75	D	EPOXY	10	A	RIPRAP	6–12
75	E	EPOXY	2	E	RIPRAP	24–36
76	A	EPOXY	33	A	SILT/GRAVEL	
76	B	EPOXY	28	A	SILT/GRAVEL	
76	C	EPOXY	19	A	SILT/GRAVEL	
76	D	EPOXY	12	A	SILT/GRAVEL	
76	E	EPOXY	2	A	RIPRAP	24–36
76	Eb	EPOXY	2	E	RIPRAP	24–36
77	A	EPOXY	33	E	SILT/GRAVEL	
77	B	EPOXY	31	A	SILT/GRAVEL	
77	C	EPOXY	21	A	SILT/GRAVEL	
77	D	CEMENT	14	S1	SILT/GRAVEL	
77	E	CEMENT	13	S1	SILT/GRAVEL	
77	F	EPOXY	11	A	RIPRAP	12–18
77	G	EPOXY	5	E	RIPRAP	24–36
77	H	EPOXY	2	E	RIPRAP	24–36
77	Hb	CEMENT	2	S2	RIPRAP	24–36
78	A	EPOXY	32	A	SILT/GRAVEL	
78	B	EPOXY	25	A	SILT/GRAVEL	
78	C	CEMENT	21	S1	SILT/GRAVEL	
78	D	CEMENT	18	S1	RIPRAP	6–12
78	E	CEMENT	15	S1	RIPRAP	12–18
78	F	EPOXY	12	A	RIPRAP	12–18
78	G	EPOXY	6	E	RIPRAP	12–24
78	H	EPOXY	3	E	RIPRAP	24–36
78	Hb	EPOXY	3	E	RIPRAP	24–36
79	A	EPOXY	34	A	SILT/GRAVEL	
79	B	CEMENT	30	S1	SILT/GRAVEL	
79	C	CEMENT	23	S1	SILT/GRAVEL	
79	D	CEMENT	16	S1	SILT/GRAVEL	
79	E	CEMENT	12	S1	RIPRAP	0–6
79	F	CEMENT	9	S1	RIPRAP	6–12
79	G	CEMENT	4	S2	RIPRAP	24–36
79	H	CEMENT	3	S2	RIPRAP	24–36
79	Hb	CEMENT	3	S2	RIPRAP	24–36
80	A	EPOXY	35	A	SILT/GRAVEL	
80	B	EPOXY	31	A	SILT/GRAVEL	
80	C	CEMENT	25	S1	SILT/GRAVEL	
80	D	CEMENT	19	S1	SILT/GRAVEL	
80	E	CEMENT	13	S1	SILT/GRAVEL	

ROCKEFELLER PLAZA						
BENT NO.	PILE	REPAIR TYPE	REPAIR LENGTH	REPAIR DETAIL	MUDLINE CONDITION	TYPICAL ROCK SIZE (IN. DIAM.)
80	F	EPOXY	9	A	RIPRAP	6–12
80	G	CEMENT	3	S1	RIPRAP	6–18
80	H	EPOXY	3	E	RIPRAP	18–24
80	Hb	EPOXY	3	E	RIPRAP	18–24
81	A	EPOXY	34	A	SILT/GRAVEL	
81	B	EPOXY	30	A	SILT/GRAVEL	
81	C	CEMENT	24	S1	SILT/GRAVEL	
81	D	CEMENT	19	S1	SILT/GRAVEL	
81	E	CEMENT	13	S1	RIPRAP	6–12
81	F	CEMENT	8	S1	RIPRAP	6–12
81	G	EPOXY	3	A	RIPRAP	6–18
81	H	EPOXY	3	E	RIPRAP	18–24
81	Hb	EPOXY	3	E	RIPRAP	18–24
82	A	EPOXY	35	A	SILT/GRAVEL	
82	B	CEMENT	24	S1	SILT/GRAVEL	
82	C	CEMENT	16	S1	SILT/GRAVEL	
82	D	CEMENT	9	S1	RIPRAP	6–18
82	E	EPOXY	4	E	RIPRAP	18–24
83	A	EPOXY	35	A	SILT/GRAVEL	
83	B	CEMENT	24	S1	SILT/GRAVEL	
83	C	CEMENT	16	S1	SILT/GRAVEL	
83	D	CEMENT	9	S1	RIPRAP	6–18
83	E	EPOXY	4	E	RIPRAP	18–24
83	Eb	EPOXY	4	E	RIPRAP	18–24
84	A	CEMENT	34	S1	SILT/GRAVEL	
84	B	CEMENT	30	S1	SILT/GRAVEL	
84	C	CEMENT	24	S1	SILT/GRAVEL	
84	D	CEMENT	19	S1	SILT/GRAVEL	
84	E	CEMENT	15	S1	RIPRAP	6–12
84	F	CEMENT	12	S1	RIPRAP	6–12
84	G	EPOXY	7	E	RIPRAP	18–24
84	H	CEMENT	4	S2	RIPRAP	24–36
84	Hb	CEMENT	4	S2	RIPRAP	24–36
85	A	CEMENT	36	S1	SILT/GRAVEL	
85	B	CEMENT	31	S1	SILT/GRAVEL	
85	C	CEMENT	25	S1	SILT/GRAVEL	
85	D	CEMENT	19	S1	SILT/GRAVEL	
85	E	CEMENT	15	S1	SILT/GRAVEL	
85	F	CEMENT	9	S1	RIPRAP	6–18
85	G	CEMENT	5	S2	RIPRAP	24–36
85	H	CEMENT	4	S2	RIPRAP	24–36
85	Hb	CEMENT	4	S2	RIPRAP	24–36
86	A	CEMENT	34	S1	SILT/GRAVEL	
86	B	CEMENT	29	S1	SILT/GRAVEL	
86	C	CEMENT	24	S1	SILT/GRAVEL	
86	D	CEMENT	16	S1	SILT/GRAVEL	
86	E	CEMENT	13	S1	RIPRAP	6–12
86	F	CEMENT	12	S1	RIPRAP	6–12
86	G	CEMENT	4	S2	RIPRAP	24–36
86	H	EPOXY	3	E	RIPRAP	24–36
86	Hb	EPOXY	3	E	RIPRAP	24–36

NOTE:

1. REPAIR LENGTHS DO NOT INCLUDE NECESSARY MUDLINE EMBEDMENT.

OWNER/ CLIENT

NEW YORK STATE OF OPPORTUNITY. Battery Park City Authority

PRIME CONSULTANT

m&n engineering, p.c.
529 FIFTH AVENUE, 14TH FLOOR
NEW YORK, NY 10017
(212) 768-7454

NO.	REVISION	APP'D	DATE
B	100% SUBMISSION	SF	05/13/20
A	60% SUBMISSION	SF	04/24/20

KEY PLAN

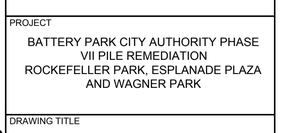

PROJECT

BATTERY PARK CITY AUTHORITY PHASE VII PILE REMEDIATION
ROCKEFELLER PARK, ESPLANADE PLAZA AND WAGNER PARK

DRAWING TITLE

PILE REPAIR SCHEDULE
(SHEET 1 OF 5)

DOB IDENTIFICATION NUMBER

--

SEAL & SIGNATURE

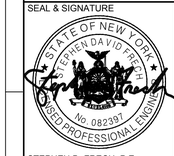

STEPHEN D. FRECH, P.E.
NYS LIC # 082397

DATE: MAY 2020
PROJECT NO. 10957
DRAWN BY ME
CHECKED BY DJ
DRAWING NO. S-601
SHEET NO. 11 of 15

BSCAN

DOB APPROVAL STAMP

ESPLANADE PLAZA

BENT NO.	PILE	REPAIR TYPE	REPAIR LENGTH	REPAIR DETAIL	MUDLINE CONDITION	TYPICAL ROCK SIZE (IN. DIAMETER)
44	A	EPOXY	43	A	SILT/GRAVEL	
44	B	EPOXY	39	A	SILT/GRAVEL	
44	C	EPOXY	31	A	SILT/GRAVEL	
44	D	EPOXY	26	A	SILT/GRAVEL	
44	E	EPOXY	20	A	SILT/GRAVEL	
44	F	EPOXY	15	E	RIPRAP	3–24
44	G	EPOXY	9	E	RIPRAP	18–36
44	H	EPOXY	5	E	RIPRAP	24–36
44	Hb	EPOXY	5	E	RIPRAP	24–36
45	A	EPOXY	41	A	SILT/GRAVEL	
45	B	EPOXY	30	A	SILT/GRAVEL	
45	C	EPOXY	20	A	SILT/GRAVEL	
45	D	EPOXY	14	E	RIPRAP	18–24
45	E	EPOXY	5	E	RIPRAP	24–36
46	A	EPOXY	41	A	SILT/GRAVEL	
46	B	EPOXY	30	A	SILT/GRAVEL	
46	C	EPOXY	20	A	SILT/GRAVEL	
46	D	CEMENT	14	S2	RIPRAP	18–24
46	E	EPOXY	5	E	RIPRAP	24–36
46	Eb	EPOXY	5	E	RIPRAP	24–36
47	A	EPOXY	42	A	SILT/GRAVEL	
47	B	EPOXY	36	A	RIPRAP	6–12
47	C	EPOXY	30	A	SILT/GRAVEL	
47	D	EPOXY	24	A	SILT/GRAVEL	
47	E	EPOXY	19	A	SILT/GRAVEL	
47	F	CEMENT	15	S1	RIPRAP	6–12
47	G	EPOXY	8	E	RIPRAP	18–24
47	H	EPOXY	6	E	RIPRAP	18–24
47	Hb	EPOXY	6	E	RIPRAP	18–24
48	A	EPOXY	39	A	RIPRAP	6–12
48	B	EPOXY	35	A	SILT/GRAVEL	
48	C	EPOXY	29	A	SILT/GRAVEL	
48	D	EPOXY	23	A	SILT/GRAVEL	
48	E	EPOXY	18	A	SILT/GRAVEL	
48	F	CEMENT	13	S2	RIPRAP	12–36
48	G	EPOXY	8	E	RIPRAP	18–24
48	H	EPOXY	6	E	RIPRAP	24–36
48	Hb	EPOXY	6	E	RIPRAP	24–36
49	A	EPOXY	40	A	SILT/GRAVEL	
49	B	EPOXY	35	A	SILT/GRAVEL	
49	C	EPOXY	28	A	SILT/GRAVEL	
49	D	EPOXY	21	A	SILT/GRAVEL	
49	E	EPOXY	20	A	SILT/GRAVEL	
49	F	EPOXY	12	E	RIPRAP	12–24
49	G	EPOXY	4	E	RIPRAP	6–24
49	H	EPOXY	4	A	RIPRAP	12–18
49	Hb	EPOXY	4	A	RIPRAP	12–18
50	A	EPOXY	38	A	SILT/GRAVEL	
50	B	EPOXY	34	A	SILT/GRAVEL	
50	C	EPOXY	28	A	SILT/GRAVEL	
50	D	EPOXY	25	A	SILT/GRAVEL	
50	E	CEMENT	16	S1	SILT/GRAVEL	
50	F	CEMENT	14	S1	RIPRAP	6–12
50	G	CEMENT	7	S1	RIPRAP	12–18
50	H	CEMENT	4	S2	RIPRAP	24–36

ESPLANADE PLAZA

BENT NO.	PILE	REPAIR TYPE	REPAIR LENGTH	REPAIR DETAIL	MUDLINE CONDITION	TYPICAL ROCK SIZE (IN. DIAMETER)
50	Hb	CEMENT	4	S2	RIPRAP	24–36
51	A	EPOXY	39	A	SILT/GRAVEL	
51	B	EPOXY	33	A	SILT/GRAVEL	
51	C	EPOXY	28	A	SILT/GRAVEL	
51	D	EPOXY	21	A	SILT/GRAVEL	
51	E	EPOXY	16	A	SILT/GRAVEL	
51	F	EPOXY	14	A	RIPRAP	6–12
51	G	CEMENT	6	S1	RIPRAP	12–18
51	H	CEMENT	4	S1	RIPRAP	6–12
51	Hb	CEMENT	4	S1	RIPRAP	6–12
52	A	EPOXY	38	A	SILT/GRAVEL	
52	B	EPOXY	35	A	SILT/GRAVEL	
52	C	EPOXY	28	A	SILT/GRAVEL	
52	D	CEMENT	22	S1	SILT/GRAVEL	
52	E	EPOXY	19	A	SILT/GRAVEL	
52	F	EPOXY	12	A	RIPRAP	6–12
52	G	EPOXY	6	E	RIPRAP	18–24
52	H	CEMENT	3	S2	RIPRAP	12–24
52	Hb	CEMENT	3	S2	RIPRAP	12–24
53	A	EPOXY	40	A	SILT/GRAVEL	
53	B	EPOXY	34	A	SILT/GRAVEL	
53	C	EPOXY	26	A	SILT/GRAVEL	
53	D	EPOXY	22	A	SILT/GRAVEL	
53	E	EPOXY	16	A	SILT/GRAVEL	
53	F	EPOXY	12	E	RIPRAP	18–24
53	G	CEMENT	6	S2	RIPRAP	18–36
53	H	CEMENT	4	S2	RIPRAP	12–24
53	Hb	CEMENT	4	S2	RIPRAP	12–24
54	A	EPOXY	37	A	SILT/GRAVEL	
54	B	EPOXY	26	A	SILT/GRAVEL	
54	C	CEMENT	16	S1	RIPRAP	6–12
54	D	EPOXY	9	E	RIPRAP	18–24
54	E	CEMENT	3	S2	RIPRAP	18–24
55	A	EPOXY	37	A	SILT/GRAVEL	
55	B	EPOXY	26	A	SILT/GRAVEL	
55	C	CEMENT	16	S1	RIPRAP	6–12
55	D	EPOXY	9	E	RIPRAP	16–24
55	E	CEMENT	3	S2	RIPRAP	16–24
55	Eb	CEMENT	3	S2	RIPRAP	16–24
56	A	EPOXY	37	A	SILT/GRAVEL	
56	B	EPOXY	31	A	SILT/GRAVEL	
56	C	EPOXY	27	A	SILT/GRAVEL	
56	D	EPOXY	19	A	SILT/GRAVEL	
56	E	EPOXY	15	A	SILT/GRAVEL	
56	F	EPOXY	12	A	RIPRAP	6–12
56	G	CEMENT	5	S2	RIPRAP	24–36
56	H	CEMENT	3	S2	RIPRAP	24–36
56	Hb	CEMENT	3	S2	RIPRAP	24–36
57	A	EPOXY	34	A	SILT/GRAVEL	
57	B	EPOXY	29	A	SILT/GRAVEL	
57	C	EPOXY	23	A	SILT/GRAVEL	
57	D	EPOXY	16	A	SILT/GRAVEL	
57	E	EPOXY	12	A	SILT/GRAVEL	
57	F	CEMENT	8	S1	RIPRAP	12–18
57	G	EPOXY	4	E	RIPRAP	24–36

ESPLANADE PLAZA

BENT NO.	PILE	REPAIR TYPE	REPAIR LENGTH	REPAIR DETAIL	MUDLINE CONDITION	TYPICAL ROCK SIZE (IN. DIAMETER)
57	H	EPOXY	3	E	RIPRAP	24–36
57	Hb	EPOXY	3	E	RIPRAP	24–36
58	A	EPOXY	36	A	SILT/GRAVEL	
58	B	EPOXY	31	A	SILT/GRAVEL	
58	C	EPOXY	24	A	SILT/GRAVEL	
58	D	EPOXY	19	A	SILT/GRAVEL	
58	E	CEMENT	15	S2	RIPRAP	24–36
58	F	EPOXY	8	E	RIPRAP	24–36
58	G	CEMENT	6	S2	RIPRAP	24–36
58	H	EPOXY	3	E	RIPRAP	24–36
58	Hb	EPOXY	3	E	RIPRAP	24–36
59	A	EPOXY	33	A	SILT/GRAVEL	
59	B	EPOXY	30	A	SILT/GRAVEL	
59	C	EPOXY	23	A	SILT/GRAVEL	
59	D	EPOXY	17	A	SILT/GRAVEL	
59	E	EPOXY	13	A	SILT/GRAVEL	
59	F	CEMENT	8	S2	RIPRAP	24–36
59	G	EPOXY	6	E	RIPRAP	24–36
59	H	CEMENT	2	S2	RIPRAP	24–36
59	Hb	EPOXY	2	E	RIPRAP	24–36
60	A	EPOXY	35	A	SILT/GRAVEL	
60	B	EPOXY	31	A	SILT/GRAVEL	
60	C	EPOXY	24	A	SILT/GRAVEL	
60	D	EPOXY	18	A	SILT/GRAVEL	
60	E	EPOXY	12	A	SILT/GRAVEL	
60	F	CEMENT	9	S2	RIPRAP	18–24
60	G	CEMENT	6	S2	RIPRAP	24–36
60	H	CEMENT	2	S2	RIPRAP	24–36
60	Hb	CEMENT	2	S2	RIPRAP	24–36
61	A	EPOXY	34	A	SILT/GRAVEL	
61	B	EPOXY	30	A	SILT/GRAVEL	
61	C	EPOXY	24	A	SILT/GRAVEL	
61	D	EPOXY	19	A	SILT/GRAVEL	
61	E	CEMENT	14	S1	SILT/GRAVEL	
61	F	CEMENT	8	S1	SILT/GRAVEL	
61	G	EPOXY	3	E	RIPRAP	24–36
61	H	EPOXY	2	A	RIPRAP	12–18
61	Hb	EPOXY	2	A	RIPRAP	12–18
62	A	EPOXY	37	A	SILT/GRAVEL	
62	B	EPOXY	32	A	SILT/GRAVEL	
62	C	EPOXY	24	A	SILT/GRAVEL	
62	D	EPOXY	19	A	SILT/GRAVEL	
62	E	CEMENT	14	S1	SILT/GRAVEL	
62	F	CEMENT	6	S1	RIPRAP	12–18
62	G	CEMENT	4	S1	RIPRAP	6–12
62	H	CEMENT	2	S1	RIPRAP	6–12
62	Hb	CEMENT	2	S1	RIPRAP	6–12

NOTE:

1. REPAIR LENGTHS DO NOT INCLUDE NECESSARY MUDLINE EMBEDMENT.

OWNER/ CLIENT

NEW YORK STATE OF OPPORTUNITY. | Battery Park City Authority

PRIME CONSULTANT

m&n engineering, p.c.
529 FIFTH AVENUE, 14TH FLOOR
NEW YORK, NY 10017
(212) 768-7454

NO.	REVISION	APP'D	DATE
B	100% SUBMISSION	SF	05/13/20
A	60% SUBMISSION	SF	04/24/20

KEY PLAN

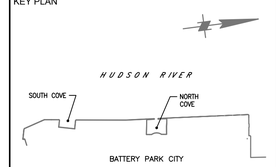

PROJECT

BATTERY PARK CITY AUTHORITY PHASE VII PILE REMEDIATION
ROCKEFELLER PARK, ESPLANADE PLAZA AND WAGNER PARK

DRAWING TITLE

PILE REPAIR SCHEDULE
(SHEET 2 OF 5)

DOB IDENTIFICATION NUMBER

--

SEAL & SIGNATURE

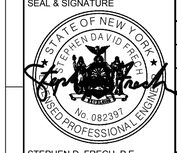

STEPHEN D. FRECH, P.E.
NYS LIC # 082397

DATE: MAY 2020
PROJECT NO. 10957
DRAWN BY ME
CHECKED BY DJ
DRAWING NO. S-602
SHEET NO. 12 of 15

BSCAN

DOB APPROVAL STAMP

WAGNER PARK						
BENT NO.	PILE	REPAIR TYPE	REPAIR LENGTH	REPAIR DETAIL	MUDLINE CONDITION	TYPICAL ROCK SIZE (IN. DIAM.)
1	A	EPOXY	9	A	RIPRAP	6–12
1	B.7	EPOXY	8	A	RIPRAP	6–12
1	D.3	EPOXY	5	E	RIPRAP	24–36
1	F	EPOXY	2	E	RIPRAP	24–36
1	Fb	EPOXY	2	A	RIPRAP	6–12
2	A	EPOXY	9	A	RIPRAP	6–12
2	B	EPOXY	7	A	RIPRAP	6–12
2	C	EPOXY	6	A	RIPRAP	6–12
2	D	EPOXY	5	A	RIPRAP	6–12
2	E	EPOXY	4	A	RIPRAP	6–12
2	F	EPOXY	2	A	RIPRAP	6–12
2	Fb	EPOXY	2	A	RIPRAP	6–12
3	A	CEMENT	17	S1	RIPRAP	6–12
3	B	CEMENT	15	S1	RIPRAP	6–12
3	C	EPOXY	13	A	RIPRAP	6–12
3	D	EPOXY	6	E	RIPRAP	24–36
3	E	EPOXY	4	E	RIPRAP	12–24
3	F	EPOXY	3	E	RIPRAP	24–36
3	Fb	EPOXY	3	E	RIPRAP	24–36
4	A	EPOXY	18	A	RIPRAP	6–12
4	B	EPOXY	14	A	RIPRAP	6–12
4	C	EPOXY	8	E	RIPRAP	36
4	D	EPOXY	7	E	RIPRAP	36
4	E	EPOXY	2	A	RIPRAP	6–12
4	F	EPOXY	2	A	RIPRAP	6–12
4	Fb	EPOXY	2	A	RIPRAP	6–12
5	A	EPOXY	18	A	RIPRAP	6–12
5	B	EPOXY	17	A	RIPRAP	6–12
5	C	EPOXY	11	A	RIPRAP	6–12
5	D	EPOXY	5	E	RIPRAP	24–36
5	E	EPOXY	3	E	RIPRAP	18–24
5	F	EPOXY	2	E	RIPRAP	24–36
5	Fb	EPOXY	2	E	RIPRAP	24–36
6	A	EPOXY	21	A	RIPRAP	12–18
6	B	EPOXY	18	A	RIPRAP	6–12
6	C	EPOXY	9	E	RIPRAP	24–36
6	D	EPOXY	5	A	RIPRAP	6–18
6	E	EPOXY	3	E	RIPRAP	24–36
6	F	EPOXY	2	E	RIPRAP	24–36
6	Fb	CEMENT	2	S2	RIPRAP	24–36
7	A	EPOXY	20	E	RIPRAP	12–24
7	B	EPOXY	18	A	RIPRAP	6–12
7	C	EPOXY	14	A	RIPRAP	12–18
7	D	EPOXY	7	A	RIPRAP	6–12
7	E	EPOXY	3	E	RIPRAP	24–36
7	F	EPOXY	3	E	RIPRAP	24–36
7	Fb	EPOXY	3	E	RIPRAP	24–36
8	A	EPOXY	21	A	RIPRAP	3–6
8	B	EPOXY	18	A	RIPRAP	3–6
8	C	CEMENT	14	S2	RIPRAP	24–36
8	D	EPOXY	5	E	RIPRAP	24–36
8	E	EPOXY	3	E	RIPRAP	24–36

WAGNER PARK						
BENT NO.	PILE	REPAIR TYPE	REPAIR LENGTH	REPAIR DETAIL	MUDLINE CONDITION	TYPICAL ROCK SIZE (IN. DIAM.)
8	F	EPOXY	2	E	RIPRAP	24–36
8	Fb	CEMENT	2	S2	RIPRAP	24–36
8.5	F	EPOXY	1	E	RIPRAP	24–36
9	A	EPOXY	22	A	RIPRAP	3–6
9	B	EPOXY	20	A	RIPRAP	6–12
9	C	EPOXY	15	E	RIPRAP	12–36
9	D	CEMENT	11	S2	RIPRAP	24–36
9	E	CEMENT	7	S2	RIPRAP	24–36
9	F	EPOXY	3	E	RIPRAP	24–36
10	A	CEMENT	27	S1	RIPRAP	6–12
10	B	EPOXY	26	A	RIPRAP	6–12
10	C	CEMENT	23	S2	RIPRAP	24–36
10	D	EPOXY	20	E	RIPRAP	24–36
11	A	CEMENT	33	S1	RIPRAP	6–12
11	B	EPOXY	29	A	RIPRAP	3–6
12	A	CEMENT	38	S1	RIPRAP	6–12
12	B	EPOXY	35	A	RIPRAP	6–12
12	C	CEMENT	33	S1	RIPRAP	6–12
12	D	EPOXY	26	E	RIPRAP	18–24
12	E	EPOXY	22	A	RIPRAP	6–12
12	F	EPOXY	18	E	RIPRAP	24–36
12	G	EPOXY	9	E	RIPRAP	24–36
12	H	EPOXY	7	E	RIPRAP	24–36
12	Hb	EPOXY	7	E	RIPRAP	24–36
12	Ib	EPOXY	7	E	RIPRAP	24–36
13	A	EPOXY	38	A	RIPRAP	12–18
13	B	EPOXY	33	A	RIPRAP	12–18
13	C	CEMENT	30	S2	RIPRAP	18–24
13	D	EPOXY	26	A	RIPRAP	6–12
13	E	EPOXY	21	A	RIPRAP	6–12
13	F	CEMENT	17	S2	RIPRAP	18–24
13	G	EPOXY	8	A	RIPRAP	6–12
13	H	EPOXY	9	E	RIPRAP	24–36
13	I	EPOXY	7	E	RIPRAP	24–36
14	A	EPOXY	38	E	RIPRAP	18–24
14	B	CEMENT	29	S1	RIPRAP	6–18
14	B.5	EPOXY	23	A	RIPRAP	6–12
14	C	CEMENT	16	S2	RIPRAP	12–36
14	D	EPOXY	13	E	RIPRAP	12–24
14	E	EPOXY	11	E	RIPRAP	6–24
14	F	EPOXY	9	A	RIPRAP	6–18
15	A	CEMENT	37	S2	RIPRAP	18–24
15	B	CEMENT	28	S1	RIPRAP	6–18
15	C	EPOXY	15	E	RIPRAP	12–24
15	D	EPOXY	12	E	RIPRAP	12–24
15	E	EPOXY	11	E	RIPRAP	6–24
15	F	EPOXY	11	A	RIPRAP	6–18
15	Fb	EPOXY	9	A	RIPRAP	6–18
16	A	EPOXY	33	A	RIPRAP	0–6
16	B	CEMENT	32	S1	RIPRAP	6–12
16	C	EPOXY	26	A	RIPRAP	6–18
16	C.5	EPOXY	21	A	RIPRAP	6–12

WAGNER PARK						
BENT NO.	PILE	REPAIR TYPE	REPAIR LENGTH	REPAIR DETAIL	MUDLINE CONDITION	TYPICAL ROCK SIZE (IN. DIAM.)
16	D	EPOXY	22	A	SILT/GRAVEL	
16	E	EPOXY	18	A	RIPRAP	6–12
16	F	EPOXY	16	A	RIPRAP	6–12
16	G	EPOXY	13	E	RIPRAP	12–36
16	H	EPOXY	10	E	RIPRAP	12–36
16	I	EPOXY	9	A	RIPRAP	6–18
16	Ib	EPOXY	9	A	RIPRAP	6–18
17	A	EPOXY	33	A	SILT/GRAVEL	
17	B	EPOXY	30	A	SILT/GRAVEL	
17	C	CEMENT	29	S2	RIPRAP	12–36
17	D	EPOXY	23	A	RIPRAP	6–18
17	E	CEMENT	20	S1	RIPRAP	6–18
17	F	EPOXY	14	E	RIPRAP	6–24
17	G	EPOXY	12	E	RIPRAP	24–36
17	H	EPOXY	8	E	RIPRAP	24–36
17	I	EPOXY	8	E	RIPRAP	6–36
17	Ib	EPOXY	8	E	RIPRAP	6–36
18	A	EPOXY	30	A	SILT/GRAVEL	
18	B	EPOXY	29	A	SILT/GRAVEL	
18	C	EPOXY	28	A	SILT/GRAVEL	
18	D	CEMENT	23	S1	RIPRAP	6–12
18	E	CEMENT	20	S1	RIPRAP	6–12
18	F	EPOXY	14	E	RIPRAP	18–24
18	G	EPOXY	6	E	RIPRAP	18–24
18	H	EPOXY	6	E	RIPRAP	18–24
18	I	EPOXY	5	E	RIPRAP	24–36
18	Ib	EPOXY	5	E	RIPRAP	24–36
19	A	EPOXY	34	A	SILT/GRAVEL	
19	B	EPOXY	33	A	SILT/GRAVEL	
19	C	CEMENT	28	S1	RIPRAP	6–12
19	D	CEMENT	24	S1	RIPRAP	6–12
19	E	EPOXY	19	A	RIPRAP	12–18
19	F	CEMENT	14	S2	RIPRAP	6–24
19	G	EPOXY	10	E	RIPRAP	18–24
19	H	EPOXY	6	E	RIPRAP	18–24
19	I	EPOXY	5	E	RIPRAP	18–24
19	Ib	CEMENT	5	S2	RIPRAP	18–24
20	A	EPOXY	36	A	RIPRAP	6–12
20	B	CEMENT	35	S1	RIPRAP	6–12
20	C	CEMENT	32	S1	RIPRAP	12–18
20	D	EPOXY	28	A	RIPRAP	6–12
20	E	EPOXY	24	E	RIPRAP	18–24
20	F	EPOXY	15	A	RIPRAP	12–18
20	G	EPOXY	10	A	RIPRAP	12–18
20	H	EPOXY	5	E	RIPRAP	24–36
20	I	EPOXY	4	E	RIPRAP	24–36
20	Ib	EPOXY	4	E	RIPRAP	24–36
21	A	EPOXY	38	A	SILT/GRAVEL	
21	B	CEMENT	35	S1	SILT/GRAVEL	
21	C	EPOXY	30	A	SILT/GRAVEL	
21	D	EPOXY	25	A	RIPRAP	6–12
21	E	EPOXY	24	E	RIPRAP	18–24

NOTE:

1. REPAIR LENGTHS DO NOT INCLUDE NECESSARY MUDLINE EMBEDMENT.

OWNER/ CLIENT

NEW YORK STATE OF OPPORTUNITY. Battery Park City Authority

PRIME CONSULTANT

m&n engineering, p.c.
529 FIFTH AVENUE, 14TH FLOOR
NEW YORK, NY 10017
(212) 768-7454

NO.	REVISION	APP'D	DATE
B	100% SUBMISSION	SF	05/13/20
A	60% SUBMISSION	SF	04/24/20

KEY PLAN

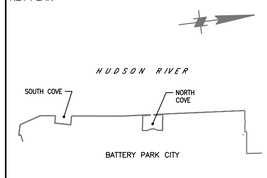

PROJECT

BATTERY PARK CITY AUTHORITY PHASE VII PILE REMEDIATION
ROCKEFELLER PARK, ESPLANADE PLAZA AND WAGNER PARK

DRAWING TITLE

PILE REPAIR SCHEDULE
(SHEET 3 OF 5)

DOB IDENTIFICATION NUMBER
--

SEAL & SIGNATURE

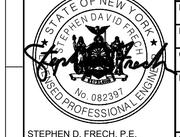

STEPHEN D. FRECH, P.E.
NYS LIC # 082397

DATE: MAY 2020
PROJECT NO. 10957
DRAWN BY ME
CHECKED BY DJ
DRAWING NO. S-603
SHEET NO. 13 of 15

BSCAN

DOB APPROVAL STAMP

WAGNER PARK						
BENT NO.	PILE	REPAIR TYPE	REPAIR LENGTH	REPAIR DETAIL	MUDLINE CONDITION	TYPICAL ROCK SIZE (IN. DIAM.)
21	F	EPOXY	17	E	RIPRAP	18–24
21	G	EPOXY	13	E	RIPRAP	18–24
21	H	CEMENT	5	S2	RIPRAP	18–24
21	I	EPOXY	5	E	RIPRAP	24–36
21	Ib	EPOXY	5	E	RIPRAP	24–36
22	A	CEMENT	39	S1	RIPRAP	6–12
22	B	CEMENT	38	S1	SILT/GRAVEL	
22	C	CEMENT	32	S1	SILT/GRAVEL	
22	D	CEMENT	29	S2	RIPRAP	18–24
22	E	EPOXY	22	A	RIPRAP	6–12
22	F	EPOXY	16	A	RIPRAP	6–12
22	G	EPOXY	10	E	RIPRAP	18–24
22	H	EPOXY	7	E	RIPRAP	18–24
22	I	EPOXY	6	E	RIPRAP	18–24
22	Ib	CEMENT	6	S2	RIPRAP	18–24
23	A	EPOXY	38	A	SILT/GRAVEL	
23	B	CEMENT	33	S1	SILT/GRAVEL	
23	C	CEMENT	25	S1	SILT/GRAVEL	
23	D	EPOXY	17	A	RIPRAP	6–12
23	E	EPOXY	11	E	RIPRAP	18–36
23	F	EPOXY	8	E	RIPRAP	18–36
24	A	CEMENT	38	S1	SILT/GRAVEL	
24	B	EPOXY	33	A	SILT/GRAVEL	
24	C	CEMENT	25	S1	SILT/GRAVEL	
24	D	EPOXY	17	A	RIPRAP	6–12
24	E	EPOXY	11	E	RIPRAP	18–36
24	F	CEMENT	8	S2	RIPRAP	18–36
24	Fb	EPOXY	6	E	RIPRAP	18–36
25	A	EPOXY	38	A	SILT/GRAVEL	
25	B	EPOXY	35	A	SILT/GRAVEL	
25	C	EPOXY	31	A	RIPRAP	6–12
25	D	EPOXY	29	A	RIPRAP	6–12
25	E	CEMENT	20	S1	RIPRAP	6–12
25	F	CEMENT	16	S1	RIPRAP	6–12
25	G	EPOXY	9	E	RIPRAP	18–24
25	H	EPOXY	6	E	RIPRAP	24–36
25	I	CEMENT	5	S2	RIPRAP	12–24
25	Ib	CEMENT	5	S2	RIPRAP	12–24
26	A	EPOXY	39	A	SILT/GRAVEL	
26	B	EPOXY	37	A	RIPRAP	6–12
26	C	CEMENT	35	S1	RIPRAP	6–12
26	D	CEMENT	27	S1	RIPRAP	6–12
26	E	CEMENT	21	S1	RIPRAP	6–12
26	F	EPOXY	16	A	RIPRAP	12–18
26	G	EPOXY	10	E	RIPRAP	18–24
26	H	EPOXY	8	E	RIPRAP	18–24
26	I	EPOXY	7	E	RIPRAP	18–24
26	Ib	EPOXY	7	E	RIPRAP	18–24
27	A	CEMENT	38	S1	RIPRAP	0–18
27	B	CEMENT	36	S2	RIPRAP	18–24
27	C	CEMENT	32	S1	RIPRAP	12–18
27	D	EPOXY	30	A	RIPRAP	0–12

WAGNER PARK						
BENT NO.	PILE	REPAIR TYPE	REPAIR LENGTH	REPAIR DETAIL	MUDLINE CONDITION	TYPICAL ROCK SIZE (IN. DIAM.)
27	E	CEMENT	25	S2	RIPRAP	0–24
27	F	EPOXY	20	A	RIPRAP	0–6
27	G	CEMENT	11	S2	RIPRAP	6–36
27	H	EPOXY	6	E	RIPRAP	24–36
27	I	EPOXY	4	E	RIPRAP	24–36
27	Ib	EPOXY	4	E	RIPRAP	24–36
28	A	EPOXY	38	A	RIPRAP	0–6
28	B	CEMENT	36	S1	RIPRAP	0–6
28	C	CEMENT	33	S1	RIPRAP	0–6
28	D	CEMENT	29	S1	RIPRAP	6–12
28	E	CEMENT	24	S1	RIPRAP	0–6
28	F	CEMENT	18	S1	RIPRAP	12–18
28	G	EPOXY	11	E	RIPRAP	24–36
28	H	EPOXY	5	E	RIPRAP	18–24
28	I	EPOXY	4	E	RIPRAP	24–36
28	Ib	EPOXY	4	E	RIPRAP	24–36
29	A	CEMENT	37	S1	RIPRAP	0–6
29	B	CEMENT	35	S1	RIPRAP	0–6
29	C	CEMENT	31	S1	RIPRAP	0–12
29	D	CEMENT	29	S1	RIPRAP	0–12
29	E	CEMENT	17	S1	RIPRAP	0–6
29	F	CEMENT	19	S2	RIPRAP	18–24
29	G	EPOXY	12	E	RIPRAP	24–36
29	H	EPOXY	7	E	RIPRAP	24–36
29	I	EPOXY	3	E	RIPRAP	24–36
29	Ib	CEMENT	3	S2	RIPRAP	24–36
30	A	CEMENT	36	S1	RIPRAP	0–6
30	B	CEMENT	33	S1	RIPRAP	6–12
30	C	CEMENT	28	S1	RIPRAP	6–18
30	D	EPOXY	24	A	RIPRAP	6–12
30	E	CEMENT	22	S1	RIPRAP	6–12
30	F	CEMENT	16	S2	RIPRAP	12–24
30	G	CEMENT	11	S2	RIPRAP	24–36
30	H	CEMENT	6	S2	RIPRAP	24–36
30	I	EPOXY	4	E	RIPRAP	24–36
30	Ib	EPOXY	4	E	RIPRAP	24–36
31	A	CEMENT	30	S1	RIPRAP	6–12
31	B	CEMENT	27	S1	RIPRAP	6–12
31	C	CEMENT	23	S2	RIPRAP	12–24
31	D	CEMENT	21	S1	RIPRAP	0–6
31	E	CEMENT	16	S2	RIPRAP	6–24
31	F	CEMENT	14	S1	RIPRAP	0–6
31	G	CEMENT	9	S2	RIPRAP	18–36
31	H	CEMENT	4	S2	RIPRAP	18–36
31	I	CEMENT	2	S2	RIPRAP	18–36
31	Ib	CEMENT	2	S2	RIPRAP	18–36
32	A	CEMENT	29	S2	RIPRAP	18–24
32	B	CEMENT	22	S2	RIPRAP	18–36
32	C	CEMENT	16	S1	RIPRAP	6–18
32	D	EPOXY	11	A	RIPRAP	6–12
32	E	EPOXY	8	E	RIPRAP	18–36
32	F	EPOXY	4	E	RIPRAP	18–36

WAGNER PARK						
BENT NO.	PILE	REPAIR TYPE	REPAIR LENGTH	REPAIR DETAIL	MUDLINE CONDITION	TYPICAL ROCK SIZE (IN. DIAM.)
33	A	CEMENT	29	S2	RIPRAP	18–24
33	B	CEMENT	22	S2	RIPRAP	18–36
33	C	CEMENT	16	S1	RIPRAP	6–18
33	D	EPOXY	11	A	RIPRAP	6–12
33	E	EPOXY	8	E	RIPRAP	18–36
33	F	EPOXY	4	E	RIPRAP	18–36
33	Fb	CEMENT	2	S2	RIPRAP	18–36
34	A	EPOXY	33	E	RIPRAP	18–24
34	B	EPOXY	30	E	RIPRAP	12–24
34	C	EPOXY	25	E	RIPRAP	12–24
34	D	CEMENT	25	S2	RIPRAP	18–24
34	E	EPOXY	17	E	RIPRAP	18–24
34	F	EPOXY	14	E	RIPRAP	18–24
34	G	CEMENT	12	S2	RIPRAP	18–24
34	H	CEMENT	7	S2	RIPRAP	18–36
34	I	EPOXY	4	E	RIPRAP	18–36
34	Ib	EPOXY	4	E	RIPRAP	18–36
34.9	Ib	EPOXY	5	E	RIPRAP	12–36
35	A	EPOXY	40	A	RIPRAP	6–12
35	B	CEMENT	38	S1	RIPRAP	6–12
35	C	EPOXY	32	A	RIPRAP	6–18
35	D	EPOXY	30	A	RIPRAP	6–12
35	E	EPOXY	25	E	RIPRAP	12–24
35	F	CEMENT	20	S2	RIPRAP	12–24
35	G	EPOXY	14	E	RIPRAP	12–36
35	H	EPOXY	7	E	RIPRAP	24–36
35	I	EPOXY	5	E	RIPRAP	12–36
36	A	CEMENT	42	S1	SILT/GRAVEL	
36	B	CEMENT	40	S1	SILT/GRAVEL	
36	C	CEMENT	40	S2	RIPRAP	6–24
36	D	CEMENT	34	S1	RIPRAP	6–12
36	E	CEMENT	26	S1	RIPRAP	6–12
36	F	CEMENT	17	S2	RIPRAP	24–36
37	A	EPOXY	44	A	SILT/GRAVEL	
37	B	CEMENT	40	S1	RIPRAP	6–12
37	C	EPOXY	33	A	RIPRAP	6–12
37	D	EPOXY	28	A	RIPRAP	6–18
37	E	CEMENT	24	S1	RIPRAP	12–18
37	F	EPOXY	18	A	RIPRAP	6–18
37	G	EPOXY	17	E	RIPRAP	18–24
37	H	EPOXY	6	E	RIPRAP	18–24
37	I	EPOXY	2	E	RIPRAP	24–36
37	Ib	CEMENT	2	S2	RIPRAP	24–36
38	A	CEMENT	41	S1	RIPRAP	6–12
38	B	EPOXY	37	E	RIPRAP	18–24
38	C	EPOXY	33	A	RIPRAP	0–18
38	D	EPOXY	28	A	RIPRAP	0–12
38	E	CEMENT	21	S1	RIPRAP	0–18
38	F	EPOXY	17	A	RIPRAP	0–12
38	G	EPOXY	8	E	RIPRAP	18–24
38	H	EPOXY	6	E	RIPRAP	24–36
38	I	CEMENT	2	S2	RIPRAP	24–36

NOTE:

1. REPAIR LENGTHS DO NOT INCLUDE NECESSARY MUDLINE EMBEDMENT.

OWNER/ CLIENT

NEW YORK STATE OF OPPORTUNITY. Battery Park City Authority

PRIME CONSULTANT

m&n engineering, p.c.
529 FIFTH AVENUE, 14TH FLOOR
NEW YORK, NY 10017
(212) 768-7454

NO.	REVISION	APP'D	DATE
B	100% SUBMISSION	SF	05/13/20
A	60% SUBMISSION	SF	04/24/20

KEY PLAN

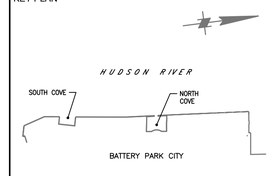

PROJECT

BATTERY PARK CITY AUTHORITY PHASE VII PILE REMEDIATION
ROCKEFELLER PARK, ESPLANADE PLAZA AND WAGNER PARK

DRAWING TITLE

PILE REPAIR SCHEDULE
(SHEET 4 OF 5)

DOB IDENTIFICATION NUMBER
--

SEAL & SIGNATURE

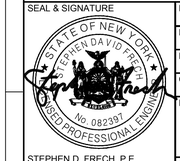

STEPHEN D. FRECH, P.E.
NYS LIC # 082397

DATE: MAY 2020
PROJECT NO. 10957
DRAWN BY ME
CHECKED BY DJ
DRAWING NO. S-604
SHEET NO. 14 of 15

BSCAN

DOB APPROVAL STAMP

WAGNER PARK						
BENT NO.	PILE	REPAIR TYPE	REPAIR LENGTH	REPAIR DETAIL	MUDLINE CONDITION	TYPICAL ROCK SIZE (IN. DIAM.)
38	Ib	CEMENT	2	S2	RIPRAP	24–36
39	A	EPOXY	41	A	RIPRAP	0–18
39	B	CEMENT	38	S1	RIPRAP	0–18
39	C	EPOXY	32	A	RIPRAP	0–12
39	D	EPOXY	30	A	RIPRAP	0–6
39	E	EPOXY	22	A	RIPRAP	0–12
39	F	CEMENT	16	S1	RIPRAP	0–6
39	G	EPOXY	10	E	RIPRAP	18–24
39	H	EPOXY	5	E	RIPRAP	18–24
39	I	CEMENT	2	S2	RIPRAP	24–36
39	Ib	CEMENT	2	S2	RIPRAP	24–36
40	A	EPOXY	38	A	RIPRAP	0–12
40	B	CEMENT	34	S1	RIPRAP	0–12
40	C	EPOXY	32	A	RIPRAP	0–12
40	D	EPOXY	25	A	RIPRAP	0–12
40	E	EPOXY	19	A	RIPRAP	0–18
40	F	CEMENT	12	S1	RIPRAP	0–12
40	G	CEMENT	7	S2	RIPRAP	24–36
40	H	EPOXY	3	E	RIPRAP	24–36
40	I	EPOXY	1	E	RIPRAP	24–36
40	Ib	EPOXY	1	E	RIPRAP	24–36
41	A	CEMENT	38	S1	RIPRAP	0–12
41	B	CEMENT	34	S1	RIPRAP	0–12
41	C	CEMENT	30	S1	RIPRAP	0–12
41	D	EPOXY	23	E	RIPRAP	0–12
41	E	CEMENT	17	S1	RIPRAP	0–18
41	F	EPOXY	12	A	RIPRAP	0–18
41	G	EPOXY	7	E	RIPRAP	24–36
41	H	EPOXY	3	E	RIPRAP	24–36
41	I	EPOXY	1	E	RIPRAP	24–36
41	Ib	CEMENT	1	S2	RIPRAP	24–36
42	A	CEMENT	37	S1	RIPRAP	0–12
42	B	CEMENT	34	S1	RIPRAP	0–12
42	C	CEMENT	29	S1	RIPRAP	0–12
42	D	CEMENT	20	S1	RIPRAP	0–12
42	E	EPOXY	17	A	RIPRAP	0–18
42	F	EPOXY	13	A	RIPRAP	0–12
42	G	EPOXY	5	E	RIPRAP	0–24
42	H	EPOXY	3	E	RIPRAP	0–24
42	I	CEMENT	1	S2	RIPRAP	0–24
42	Ib	CEMENT	1	S2	RIPRAP	0–24
43	A	EPOXY	33	A	RIPRAP	0–12
43	B	EPOXY	27	A	RIPRAP	0–12
43	C	EPOXY	18	A	RIPRAP	0–12
43	D	CEMENT	11	S1	RIPRAP	0–12
43	E	EPOXY	6	E	RIPRAP	24–36
43	F	CEMENT	3	S2	RIPRAP	24–36
44	A	CEMENT	33	S1	RIPRAP	0–12
44	B	EPOXY	27	A	RIPRAP	0–12
44	C	EPOXY	18	A	RIPRAP	0–12
44	D	CEMENT	11	S1	RIPRAP	0–12
44	E	EPOXY	6	E	RIPRAP	24–36

WAGNER PARK						
BENT NO.	PILE	REPAIR TYPE	REPAIR LENGTH	REPAIR DETAIL	MUDLINE CONDITION	TYPICAL ROCK SIZE (IN. DIAM.)
44	F	EPOXY	3	E	RIPRAP	24–36
44	Fb	CEMENT	1	S2	RIPRAP	24–36
45	A	EPOXY	33	A	RIPRAP	6–12
45	B	EPOXY	31	A	RIPRAP	6–12
45	C	CEMENT	25	S1	RIPRAP	6–12
45	D	CEMENT	20	S1	RIPRAP	6–12
45	E	CEMENT	13	S2	RIPRAP	24–36
45	F	EPOXY	9	E	RIPRAP	18–36
45	G	EPOXY	5	E	RIPRAP	24–36
45	H	EPOXY	1	E	RIPRAP	24–36
45	I	N/A	0	N/A	RIPRAP	24–36
45	Ib	N/A	0	N/A	RIPRAP	24–36
46	A	EPOXY	31	A	RIPRAP	6–12
46	B	EPOXY	28	A	RIPRAP	6–12
46	C	CEMENT	25	S1	RIPRAP	6–12
46	D	CEMENT	18	S1	RIPRAP	6–12
46	E	EPOXY	13	A	RIPRAP	6–12
46	F	CEMENT	10	S2	RIPRAP	18–24
46	G	CEMENT	5	S2	RIPRAP	24–36
46	H	EPOXY	2	E	RIPRAP	24–36
46	I	EPOXY	1	E	RIPRAP	24–36
46	Ib	EPOXY	1	E	RIPRAP	24–36
47	A	EPOXY	34	A	RIPRAP	6–12
47	B	CEMENT	32	S1	RIPRAP	6–12
47	C	CEMENT	25	S1	RIPRAP	6–12
47	D	CEMENT	22	S2	RIPRAP	24–36
47	E	EPOXY	18	A	RIPRAP	6–12
47	F	EPOXY	10	E	RIPRAP	18–24
47	G	EPOXY	5	E	RIPRAP	24–36
47	H	EPOXY	2	E	RIPRAP	24–36
47	I	EPOXY	1	E	RIPRAP	24–36
47	Ib	N/A	0	N/A	RIPRAP	24–36
48	A	CEMENT	34	S1	RIPRAP	6–12
48	B	CEMENT	32	S1	RIPRAP	6–12
48	C	EPOXY	28	A	RIPRAP	6–12
48	D	CEMENT	20	S2	RIPRAP	18–24
48	E	EPOXY	16	E	RIPRAP	24–36
48	F	CEMENT	11	S2	RIPRAP	24–36
48	G	EPOXY	6	E	RIPRAP	24–36
48	H	EPOXY	2	E	RIPRAP	24–36
48	I	EPOXY	0	E	RIPRAP	24–36
48	Ib	N/A	0	N/A	RIPRAP	24–36
49	A	EPOXY	32	A	RIPRAP	6–12
49	B	CEMENT	30	S2	RIPRAP	18–24
49	C	CEMENT	27	S1	RIPRAP	12–18
49	D	EPOXY	19	A	RIPRAP	6–12
49	E	CEMENT	14	S2	RIPRAP	24–36
49	F	EPOXY	9	E	RIPRAP	24–36
49	G	CEMENT	4	S2	RIPRAP	24–36
49	H	EPOXY	2	E	RIPRAP	24–36
49	I	N/A	0	N/A	RIPRAP	24–36
49	Ib	N/A	0	N/A	RIPRAP	24–36

WAGNER PARK						
BENT NO.	PILE	REPAIR TYPE	REPAIR LENGTH	REPAIR DETAIL	MUDLINE CONDITION	TYPICAL ROCK SIZE (IN. DIAM.)
50	A	CEMENT	36	S1	RIPRAP	6–12
50	B	CEMENT	28	S2	RIPRAP	24–36
50	C	CEMENT	25	S1	RIPRAP	6–12
50	D	EPOXY	19	A	RIPRAP	6–12
50	E	EPOXY	15	A	RIPRAP	6–12
50	F	CEMENT	10	S2	RIPRAP	24–36
50	G	CEMENT	7	S2	RIPRAP	24–36
50	H	EPOXY	0	E	RIPRAP	24–36
50	I	N/A	0	N/A	RIPRAP	24–36
50	Ib	N/A	0	N/A	RIPRAP	24–36

NOTE:

1. REPAIR LENGTHS DO NOT INCLUDE NECESSARY MUDLINE EMBEDMENT.

OWNER/ CLIENT

NEW YORK STATE OF OPPORTUNITY. Battery Park City Authority

PRIME CONSULTANT

m&n engineering, p.c.
529 FIFTH AVENUE, 14TH FLOOR
NEW YORK, NY 10017
(212) 768-7454

NO.	REVISION	APP'D	DATE
B	100% SUBMISSION	SF	05/13/20
A	60% SUBMISSION	SF	04/24/20

KEY PLAN

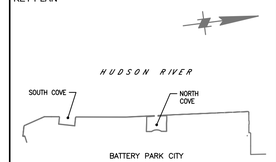

PROJECT

BATTERY PARK CITY AUTHORITY PHASE VII PILE REMEDIATION
ROCKEFELLER PARK, ESPLANADE PLAZA AND WAGNER PARK

DRAWING TITLE

PILE REPAIR SCHEDULE
(SHEET 5 OF 5)

DOB IDENTIFICATION NUMBER

--

SEAL & SIGNATURE

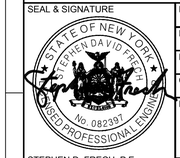

STEPHEN D. FRECH, P.E.
NYS LIC # 082397

DATE:	MAY 2020
PROJECT NO.	10957
DRAWN BY	ME
CHECKED BY	DJ
DRAWING NO.	S-605
SHEET NO.	15 of 15

BSCAN

DOB APPROVAL STAMP

BATTERY PARK CITY AUTHORITY
PHASE VII PILE REMEDIATION
NEW YORK, NEW YORK

INDEX OF SPECIFICATIONS

00005 - General Conditions

01110 - Summary of Work

01140 - Work Restrictions

01310 - Project Management and Coordination

01320 - Construction Progress Documentation

01330 - Submittal Procedures

01450 - Quality Assurance

01575 - Temporary Environmental Controls

01700 - Execution Requirements

01710 - Cleaning

01770 - Closeout Procedures

02100 - Site Work General Provisions

02270 - Erosion and Sediment Control

03310 - Epoxy Mortar and Cementitious Grout Pile Jacketing

Notwithstanding anything in these specifications and drawings to the contrary, all provisions in the Battery Park City Authority contract shall supersede any conflicting provisions in these documents. All other provisions of the Contract Documents shall remain in full force and effect. References to the "Authority" in these Conditions shall be deemed to mean "Owner/Owner's Representative" and vice versa.

1.01 INTRODUCTION

A. If, during the performance of the Work, the Contractor finds a conflict, error, or discrepancy in the Contract Documents, the Contractor shall report to the Construction Manager in writing immediately.

B. In the event of discrepancies between the Drawings and Specifications, the Drawings shall govern.

C. The Specification covers the esplanade rehabilitation work at Battery Park City, Manhattan, NY, also referred to herein as the Project Site and is shown in the Contract Drawings.

D. The Contractor guarantees that in the performance of work, he and every person in his direct or indirect employment (i.e. subcontractors) shall abide by and comply with all federal, state, and local laws including the Occupational Safety and Health Act and waterfront MARSEC USCG requirements.

E. The term Owner, as used throughout the Contract Documents, designates Battery Park City Authority (BPCA) as the Owner, or its duly authorized representative.

F. The term Owner's Representative, as used throughout these Specifications, indicates the Owner's authorized representative for a particular activity. The term includes Construction Manager, Engineer-Of-Record, and/or Special Inspector.

G. It is the responsibility of the Construction Manager to delegate responsibility for particular activities.

H. The term Engineer-Of-Record or Engineer as used throughout the Contract Documents, designates M&N Engineering P.C.

I. The term Special Inspector, as used throughout the Contract Documents, refers to the party responsible for on-site construction review of the Work to confirm accordance with the Contract Drawings and applicable sections of the New York City Building Code. The Special Inspector shall be selected by the Construction Manager at the discretion of the Owner.

J. All correspondence between the Contractor and Engineer of Record and/or Special Inspector shall be directed through the Construction Manager.

K. The Work shall commence in accordance with the Contractor's accepted schedule. If, in the opinion of the Owner, the Contractor does not demonstrate that sufficient work is underway according to the accepted schedule, the Owner reserves the right to terminate the Contract.

L. In the event of termination of the Contract pursuant to the conditions set forth herein, such termination shall not act so as to relieve the Contractor from liability for

any damages sustained by the Owner as a result of any breach by the Contractor of the terms of the Contract.

M. At the completion of each workday the area around the project site must be clear of all construction equipment, materials, and debris. The Contractor shall coordinate with the Construction Manager regarding allowable equipment and material lay down area.

N. Definitions

1.	Work:	Material, equipment, labor, and services required for the Contractor to fulfill their obligations of the project or the part of the project considered.
2.	Project Site:	Various locations within Battery Park City, New York, NY 10280.
3.	Provide:	Furnish and install; provide in place.
4.	Furnish:	Furnish only, not including installation.
5.	Install:	Furnish and Install in place materials or structures. (Installation of materials furnished by others will be specifically identified).
6.	Shall:	Mandatory requirement (understood to be applicable whether or not “shall” is used in the sentence structure): omission of “shall” does not make the Specification or Contract Drawing non-mandatory.
7.	Contract Price:	This shall be read as the Total Lump Sum Bid by the contractor and accepted by the Owner.
8.	Day:	Contract "day" shall be as defined in the BPCA master contract.

1.02 DESCRIPTION OF WORK

This Agreement covers the complete scope for the type of work included herein, including all incidental work not necessarily indicated or described in the “scope” documents. This Agreement is let on the basis of such documents with the understanding that the Proposer is to furnish all items required for proper completion of the work without adjustment to the Contract Price. It is intended that the Work be of sound and quality installation and the Proposer shall be solely responsible for the inclusion of adequate amounts to cover installation of all items indicated, described or implied.

The Work shall include, but not be limited to:

A. Mobilization to and demobilization from the site.

B. Furnishment, installation, and maintenance of environmental controls and safety measures.

C. Furnishment, installation, and maintenance of temporary works.

D. Coordination of Work with adjacent vessel traffic and usage of the Project Site by others.

E. Demolition and authorized disposal of components associated with repairs.

F. All repairs shown in the Contract Drawings.

G. Providing coordination with the Construction Manager for securing testing services and test results confirming accordance with Contract Documents for Engineer of Record approval.

H. Providing submittals.

I. Attendance of authorized representative at project meetings.

J. Coordination with Construction Manager and/or Engineer of Record for review of Work.

K. Providing weekly updates to a two-week schedule of anticipated work.

L. Providing daily construction reports.

M. Providing detailed outline of Proposer's QA/QC protocol.

1.03 GENERAL SCOPE OF WORK

A. Schedule

Unless otherwise stated in Section 01330, the following submittal schedule of all shop drawings, etc., for review by the Construction Manager and Engineer of Record shall be as follows:

1. Contractor’s Submittal

Certain critical items are to be submitted by the Contractor within time frames listed in these Specifications. Unless specifically noted as such, the Contractor shall be responsible for the timely submittal of all required items, taking into account the Owner's Representative’s review period as outlined herein, in order to maintain satisfactory progress of the Work.

Proposer shall submit within two (2) weeks after receipt of Contract or Notice to Proceed a detailed schedule to the Owner's Representative conforming with the project milestone installation dates in their submitted proposal.

Contractor shall be responsible to meet all project milestone dates. If the contractor does not meet the milestone dates or is progressing behind schedule, the contractor will be directed by the Owner/Construction Manager to work additional shifts, hours, and/or weekends at no additional cost to the Owner, in order to ensure substantial completion no later than the specified project closeout date. The project milestone dates are as follows:

a. Contractor to complete and submit all required Shop Drawings: One (1) week after Start Date.

b. Completion of all in water work: Three (3) weeks before the start of the in-water work moratorium as outlined in the RFP.

c. Punch List Walk-Through: One (1) week following completion of in-water work.

d. Final Inspection of Punch List: One (1) week following Punch List Walk-Through.

Contractor shall be required to submit an original certificate of insurance to the Construction Manager one week prior to commencement of contracted work in accordance with the Owner's contract.

2. Owner's Representative Review and Comments

The Owner's Representative shall provide a written review of the submittal within five (5) business days after receipt of the Contractor's submittal.

The Work shall be performed in a general sequence developed by the Contractor and submitted to the Construction Manager for review, in accordance with the requirements of the Contract. The Contractor is solely responsible for the means and methods of construction and for the sequences and procedures to be used.

The Contractor shall furnish and coordinate all labor, supervision, materials, equipment, and appliances for all demolition and/or construction work in connection with the demolition and/or construction of the marine facilities.

The Contractor acknowledges and is aware that the esplanade area is occupied by others and that the site will not be fully closed from public access. All material delivery and operations associated with the Work shall be coordinated with other activities at the site in such a manner as to minimize the impedance on the site's tenants and the public, while maximizing the cost effectiveness and time of the Work. Coordination of equipment mobilization, construction, deliveries, etc. must be made with the Construction Manager.

The Contractor is being made aware of the strong currents and heavy vessel traffic at this site along the Hudson River. The Contractor shall include any fee to perform work in this environment in their lump sum bid. The Contractor is responsible for securing waterborne equipment at his own risk. Approval from the Construction Manager is required for the location and means of securing such equipment. The Contractor shall provide proper notification to USCG and all others as required (i.e. Notice to Mariners).

1.04 EXAMINATION OF EXISTING CONDITIONS

Before submitting a proposal, it is a requirement of this Contract that each proposer visit the site to determine the conditions under which the Work is to be done. Such examination shall include, but not be limited to:

A. Structural detail of the existing structures and related facilities.

B. Various on-site utilities and structures not within the Scope of this Contract, but that may impact the execution of the Work. These will remain fully operational throughout the construction period.

C. The layout and structural condition of the existing structures and water depths.

D. Access space, possible work and staging areas, and loading restrictions.

1.05 PERMITS

The Owner is in the process of securing certain permit amendments and extensions required by federal and state authorities for the proposed activities. The Contractor is responsible for obtaining the New York City Small Business Services (NYCSBS) Work Permit upon notification from the Engineer/Construction Manager of project approval by NYCSBS. Copies of the existing permits are provided as part of the contract documents. Copies of the permit extension applications will be provided to the selected contractor. It is the responsibility of the Contractor to perform the Work in accordance with the terms and conditions of the permits. The Contractor shall post copies of the permits at the site throughout the course of the Work. The Contractor is responsible to obtain all permits associated with the legal disposal of construction debris. The Contractor shall secure all required local authorizations and permits, as well as Notification to Mariners.

1.06 CONTRACTOR-FURNISHED MATERIALS

A. The Contractor shall furnish all materials for installation in the completed Work as specified hereinafter.

B. The Contractor shall handle these materials as they are delivered to the site or off-site work areas, and shall store them in a designated storage area by the Construction Manager. If sufficient room is not available, the Contractor shall store materials at their own cost.

C. The Contractor-furnished material is subject to review and approval by the Owner or Owner's Representative at the plant of manufacture at the Owner’s option. Review by the Owner or Owner's Representative is not to be construed as technical in nature and in no way shall be deemed to relieve the Contractor from his/her obligation herein to insure the quality and integrity of the materials supplied by the Contractor for this project.

D. Project materials furnished by the Contractor shall conform to the requirements of the Specifications stated hereinafter. The Contractor shall, as part of the Contract fee, also furnish all consumable materials necessary to complete the Work, such as, but not limited to, welding electrodes, safety equipment, etc.

1.07 LAYOUT

A. The Contractor shall be solely responsible for the accuracy of all locations, dimensions, and levels and no plea as to instructions or order received from any other sources other than information contained on Contract Drawings, Specifications or in written orders of the Owner or Construction Manager shall justify departure from the dimensions and elevations required by the Contract Drawings.

B. The Contractor shall take their own measurements at the site, verifying same with the Contract Drawings and existing facilities, and will be held responsible for the proper fit and alignment of completed work in position.

1.08 GUARANTEE

A. The Contractor shall guarantee to the Owner all materials and workmanship against original defects, or against injury from proper and usual wear when used for the purpose intended, for twelve (12) months after date of final payment certifications, and shall maintain all items in perfect condition during the period of guarantee.

B. Defects appearing during the period of guarantee shall be made good by the Contractor at his expense upon written demand of the Owner, it being required that all work shall be in perfect condition when the period of guarantee shall have elapsed. The Owner shall provide notice of correction along with time frames for correction prior to taking action regarding guarantee bonds or penalties.

C. The Proposer shall follow any and all anti-terrorism security procedures, guidelines, instructions, and regulations with respect to ingress into and egress from the work site, transportation and disposition of material that might be considered contraband as well as any emergency procedures. It is the Proposer's responsibility to make contingencies for the effect upon the scheduling and performance of their work of any and all such regulations and procedures. The cost of such contingencies shall be included in the Contract Price.

1.09 PARKING, STORAGE AND ACCESS TO WORK AREA

A. The Contractor shall coordinate with the Construction Manager for site access, available parking, storage, and access to the work area. The overall objective will be to perform the work with minimal to no disruption to the daily operation of the park. The contractor shall submit a staging and work plan to the Owner within two (2) weeks of project award. No work shall commence on the site until the contractor receives written acceptance of this plan. The Contractor shall protect the stored equipment and material from the elements in such a manner as to be satisfactory to the manufacturer of the equipment or material and the Owner.

B. Should questions of labor jurisdiction arise, the Proposer will immediately take steps to settle such disputes and will use such labor as may be determined to have jurisdiction, at no additional cost to the Owner. Should it fail to take expeditious action, it will be responsible for any time lost because of delays arising from such disputes.

C. The Contract includes the cost of all standby trades and Owner Representative fees should Proposer work prior to or later than normal working hours and/or on Saturdays, Sundays, and Holidays, if the Proposer desires to work outside of normal working hours. This includes the additional cost for inspections by the engineer. The contractor shall also obtain any required permits to work outside of normal business hours.

D. As a State Agency, Proposer shall be aware that all BPCA projects require the employment of labor at prevailing wage rates. Outside State and Federal Agencies will closely monitor all projects.

E. Contractor shall be responsible for providing all equipment required for but not limited to unloading, installation, clean-up and hauling of debris. Contractor is to be aware that due to the spacing limitations of the surrounding area of work there is to

be no staging of equipment on site, unless approved in the Contractor's Staging Plan.

F. The contractor is responsible for coordination of their work between the Engineer and the Dockmaster. In keeping with the project philosophy of "Zero Impact" on Marina operations, Contractor shall keep the interruption of quay services and access to moored vessels, their crews and passengers to a minimum.

G. Contractor shall not use the site for staging of construction materials or equipment, unless approved in the Contractor's Staging Plan. The barges shall be subject to the applicable federal, state and local ordinances in addition to the marina regulations.

H. Proposer shall not store any material or equipment on site unless directed by the Owner/Owner's Representative. The Proposer shall provide storage space for inspection dive equipment and provide access and material support for the inspection crews.

I. Proposer shall not use the site for staging of installation materials or equipment except as approved by the Owner.

1.10 SUBCONTRACTORS

A. A list of Subcontractors, pre-qualified by the Contractor, shall be submitted to the Owner by the Contractor with his proposal. The Owner has the ultimate right to accept or reject any one or more of the subcontractors, and must do so in writing after receipt of said list from the Contractor. No deviations shall be allowed from this list without written approval of the Owner. Valid original insurance certificates for subcontractors shall be submitted by the Contractor to the Owner with their proposal.

B. The Owner shall receive, upon completion of this Contract in full from the Contractor, any reduction in the Subcontractor's price, which may result from a reduced scope of the Contractor's work.

1.11 SITE CONDITIONS

A. At the Contractor's expense, the Contractor's working areas shall be cleaned on a day-to-day basis, with all rubbish removed from the site and all work areas cleaned at the end of each day. At final completion of all work, the Contractor shall leave the entire premises, within the site of his operations, clean and free from the rubbish resulting from his construction operations.

B. Each Proposer is responsible for progress cleaning of their own areas on a daily basis. All Proposers are responsible for consolidating any debris caused by their work. The proposer for General Construction shall be responsible for cleanup of the entire site which includes removal of debris for ALL proposers on site on a daily basis. The proposer for General Construction shall legally dispose consolidated debris off-site. Each Proposer is advised that failure to comply with the cleaning requirements set forth by the owner and contract documents will result in back charges and/or reductions in payments.

C. Contractor shall perform site cleanup and removal of debris on a daily basis and broom clean all installation areas at completion of the day. Surplus equipment, parts, and installation materials are to be removed by contractor upon completion of installation unless it is mutually agreed, in writing, from Owner or the Construction Manager that this material can remain on site.

D. Contractor shall be responsible for ice, snow and frost removal at site during construction in order to accommodate performance of work. This removal shall be coordinated with the owner and shall conform to all applicable federal, state, and local regulations.

E. The Proposer shall take special care to provide for temporary damage protection for any and all existing conditions to remain in proximity to the work or any other applicable project areas. The protection shall remain in place while performing the work shown or described herein or elsewhere in the Contract Documents. Any damage to existing conditions to remain as a result of work by the Proposer shall be repaired or replaced to the satisfaction of the Owner and at no additional cost to the Owner.

1.12 COMPENSATION (NOT USED)

1.13 UTILITIES

The Contractor is responsible to provide and maintain any and all utilities they deem necessary to complete the Work. Should existing site utilities be made available for the Contractor's use by the Owner, it is the responsibility of the Proposer to verify the suitability of existing site utilities for their needs. The Contractor may use such provided utilities at his own risk. Damages or interruptions in service resulting from the contractor's use shall be the sole responsibility of the Contractor and repairs shall be made immediately at no additional cost to the Owner.

1.14 FIRE PROTECTION

The Contractor shall provide and maintain, at their expense, all required fire protection systems, manpower, and devices as necessary to safely perform the Work in accord with applicable regulations. The fire protection means shall be operational throughout the period of construction. The Contractor shall also maintain sufficient means for fire and emergency rescue vehicles to access the site.

1.15 COMPLIANCE WITH CONTRACT (NOT USED)

1.16 ENVIRONMENTAL PROTECTION

The Contractor shall comply with all local, state, and federal requirements for protection of:

A. The environment during the Work. No later than fifteen (15) business days following award of contract and at least ten (10) business days prior to mobilization to the site, Contractor shall submit a comprehensive plan describing the means and methods to be employed for environmental protection, containment, and clean up. Contractor shall ensure that personnel are properly trained and that sufficient equipment and materials are readily available for use if required. Contractor shall abide by state and

federal spill-reporting requirements. Clean-up required as a result of Contractor negligence shall be the sole responsibility of the Contractor and shall be carried out at no additional cost to the Owner.

B. During execution of the Work, the Contractor is required to install and maintain any and all required sedimentation and erosion control measures to protect adjacent waterways, streets, and properties. Measures include but are not limited to temporary berms, hay bales, silt fences, containment booms, and turbidity curtains. This work shall be in accordance with the NYSDEC, NYCDEP, local regulations, and any other agency maintaining jurisdiction over the project site. Temporary materials and equipment shall conform to requirements for Temporary Work.

C. The work by the Contractor shall conform to the applicable section of the New York City Noise Code regarding the sound level standards, the time and duration of construction activities, and all other applicable regulations.

1.17 TEMPORARY WORK

Labor, equipment, materials, and services required to perform the Work that, upon completion, are not a part of the Work, shall be furnished, installed, and subsequently removed from the site by the Contractor. Temporary works shall not adversely impact or damage the surrounding site. Any and all damages caused from temporary works shall be remediated or repaired by the contractor at no additional cost to the Owner.

1.18 SAFETY PLAN

No later than ten (10) business days following award of Contract and at least ten (10) business days prior to mobilization to the site, Contractor shall submit two (2) hard copies and one in PDF file format of their project-specific Safety Plan to the Owner.

1.19 MATERIAL SAFETY DATA SHEETS

No later than ten (10) business days following award of contract and at least ten (10) business days prior to mobilization to the site, Contractor shall submit two (2) three-ring bound sets of all Material Safety Data Sheets (MSDS) and one in PDF file format for materials anticipated for use in execution of the Work. As the Work progresses and new materials are used on the project, Contractor shall submit two (2) copies and one in PDF file format of the corresponding MSDS’s for these new materials no later than the time of arrival of the materials on site. ALL MSDS sheets regarding materials used in the execution of the Work shall be up-to-date and stored in the Contractor's onsite job trailer or office and be available for review at any time.

1.20 WORK SCHEDULE REQUIREMENTS

Access to the site and acceptable working hours are limited and shall be coordinated with the Owner and Construction manager. The Owner shall be notified of any work request outside of these hours a minimum of two (2) weeks prior to the date work will take place. Work shall be in compliance with local noise restriction ordinances. It is understood that Work hours may need adjustment in order to accommodate tidal cycles, which will remain in operation during the course of construction.

1.21 ENGINEERING SERVICES CHARGEABLE TO THE CONTRACTOR

The Owner reserves the right to charge the Contractor for additional engineering and inspection services if required including, but not limited to, Contractor's actions or inactions, delays, quality assurance failures, re-work, etc.

1.22 CONTRACTOR'S REPRESENTATIVE

The Contractor shall assign an individual to be the single point of contact for all job-related correspondence and issues. This individual shall be assigned to the project from start to finish, and shall not be replaced without permission from the Owner whose permission should not be unreasonably withheld. This individual shall be responsible to disseminate information to other members of the Contractor's staff and to applicable subcontractors as necessary. This individual shall be the Contractor's designated representative at the site, and shall be authorized to conclude all matters, financial and otherwise, on the Contractor's behalf. The Contractor's Representative shall attend all project meetings and shall be on site at all times while the Contractor or his Subcontractors are present on site.

1.23 MEANS AND METHODS

The structures have been designed to be self-supporting and stable after construction is complete. The stability of the structures prior to completion is solely the responsibility of the Contractor. This responsibility extends to related aspects of the construction activity including, but not limited to, erection methods, erection sequence, connections, temporary bracing, forms, shoring, use of equipment, and similar construction procedures. Review of construction by the Engineer of Record is for general conformance with the Contract Documents only. Lack of comment by the Owner and Owner's Representative with regard to construction procedures shall not be interpreted as approval or acceptance of any such procedures.

1.24 PRECEDENCE

It is expressly understood and agreed that failure by the Owner or Owner's Representative to exercise his authority or prerogative to order the Contractor for any duly authorized purpose shall not be considered to set a precedent for any other activities.

1.25 SAFETY OF PERSONS AND PROPERTY

The Contractor is solely responsible for the safety of their operations. The Contractor shall take precautions for the safety of, and shall provide protection to prevent damage, injury, or loss to:

A. Persons employed by the Contractor in performance of the Work, and persons nearby that may be affected by the Contractor's operations or the Work;

B. The Work, including all equipment and materials which will be incorporated in the Work;

C. Other properties, structures, and persons at the site, or on adjacent properties.

1.26 UNCOVERING WORK

The Contractor shall notify the Construction Manager prior to covering any Work. The Contractor shall not proceed to cover the Work until formal approval from the Construction Manager is provided in writing. If any Work is covered prior to acceptance by the Owner or Construction Manager, the Work shall, if requested by the Owner, be uncovered for the Owner's observation and then be re-covered at the Contractor's sole cost and expense.

1.27 DAILY CONSTRUCTION REPORTS

For each day that Work is performed at the site, the Contractor shall prepare and submit a Daily Construction Report to the Construction Manager. Contractor shall include the following information in the report, as a minimum:

A. Project name

B. Contractor name

C. Date

D. Hours worked

E. Weather conditions, including observed tidal conditions

F. Subcontractors working on site

G. Material deliveries (material, quantity, vendor, and stored location)

H. Trades working on site (trade and number of workers per trade)

I. Equipment on site (including but not limited to year, make, and model number, with notation of whether the equipment was idle or was used in the Work)

J. Specific work performed, location and type of work

K. Visitors to the site

L. Materials or equipment leaving the site (including debris removal)

M. Incident descriptions

N. Upcoming weekly tidal predictions

O. Contractor shall submit reports no later than 12:00 hours for the previous day's work.

1.28 MONITORING OF EXISTING STRUCTURES DURING CONSTRUCTION

The Owner reserves the right to establish an independent monitoring program in order to evaluate the effect of the Work on the existing structures to remain on site. Such monitoring may include, but is not necessarily limited to, settlement gauges, tilt plates, and crack gauges.

The Owner reserves the right to suspend the Contractor's operations at any time based upon the results of the monitoring data.

1.29 EXCAVATED MATERIAL

Contractor shall leave excavated material a safe distance from the base of the pile where the excavation was performed. Upon completion of the repair, Contractor shall backfill the excavation with the excavated material.

1.30 ENGINEERING REVIEW AND SPECIAL INSPECTION

At key stages throughout the Work, engineering inspections are required to ensure the Work is being performed in accordance with the Contract Documents. These inspections will be performed by a Special Inspector, as selected by the Construction Manager at the discretion of the Owner. The final acceptance of the Work will be performed by the Engineer of Record. Each pile repair location must be inspected by the special inspector prior to the formwork being placed on the pile. If a pile is encapsulated without this inspection, Owner may request that the installed work be removed and reinstalled at no additional cost to the Owner. Additional pre and post inspection criteria may be required at the discretion of the Special Inspector, Engineer of Record or Construction Manager.

1.31 EQUIPMENT

Proposers shall use ultra-low sulfur diesel fuel or compressed natural gas (CNG) for all construction vehicles with a carrying capacity in excess of 5 tons and for all portable generators, consistent with Local Law 77 for Lower Manhattan. All diesel engines of greater than 50 horsepower must use ultra-low sulfur diesel fuel with a sulfur content no greater than 15 ppm. Equip the above vehicles with high performance engines and diesel oxidation catalyst (DOC) filters or another previously demonstrated advanced retrofit technology, consistent with NYC Local Law 77 for Lower Manhattan. On-road vehicles used in construction may not idle for more than five consecutive minutes except under practical considerations such as during vehicle maintenance, while stopped in traffic, and in cold weather conditions below 25 degrees F.

END OF SECTION 00005

PART 1.0 - GENERAL

1.01 EXAMINATION OF DOCUMENTS AND SITE OF WORK (NOT USED)

1.02 PROOF OF COMPETENCY OF PROPOSER (NOT USED)

1.03 EXECUTION OF AGREEMENT (NOT USED)

1.04 INTERPRETATION OF CONTRACT DOCUMENTS PRIOR TO PROPOSING (NOT USED)

1.05 PRE-PROPOSAL CONFERENCE AND JOB SITE WALKTHROUGH (NOT USED)

1.06 CONSTRUCTION TIME (NOT USED)

1.07 BASE BID (NOT USED)

1.08 NOT USED

1.09 SPECIAL CONDITIONS

The Proposer acknowledges and shall include the cost for the following in the Proposal:

A. Some piles may have existing items/debris and chains that shall be removed completely prior to performing the work associated with each repair. The chains are for the floating docks and are to be relocated to an adjacent pile while performing work, and then moved back to complete repairs on the adjacent pile. If the chains cannot be removed without cutting, notify the Owner's representative immediately.

B. Provide means to maintain and collect debris, including boom around work area and boat on premises capable of retrieving floatable debris that leaves the immediate work area. The Contractor shall also readily provide the following for the Owner's Representative throughout the duration of the project:

1. Safe means on entry and egress, such as a ladder or gangway, to access floating work platform from the wharf.

2. A changing station, storage area with heating and cooling for the Owner's divers.

1.10 ENGINEERING REVIEW AND SPECIAL INSPECTION

At key stages on each pile, engineering inspections are required to ensure the Work is being performed in accordance with the Contract Documents. These inspections will be performed by a Special Inspector, as selected by the Construction Manager at the discretion of the Owner. The final acceptance of the Work will be performed by the Engineer of Record. The key stages of these required inspections are outlined below. The items listed may not be all inclusive. Additional pre and post inspection criteria may be required at the discretion of the Special Inspector, Engineer of Record, and/or Construction Manager.

Each pile inspection shall take place at the following points of work:

A. After cleaning hard bottom locations. After cleaning and bottom excavation (soft bottoms).

B. After top of pile plug has been cleaned and prepped to receive the top section pile repair.

C. After finished product is fully installed

1. Pile plugs (all pile plugs shall be inspected prior to the installation of the upper section repair.

2. Upper sections of pile repair

During all epoxy grout mixing, injection and pump events, the Special Inspector shall be onsite to ensure quality control of the materials and adherence to the Contract Documents. In addition, on the first pump event of epoxy grout, the Engineer of Record as well as the material manufacturer's representative must be onsite in addition to the Special Inspector. Contractor is responsible for notifying the Special inspector in writing one week prior to any pumping operations.

The Contractor shall coordinate with the Construction Manager to maximize inspection sequencing and timing against the production of the divers. At a minimum, and subject to the Construction Manager’s procedures, the contractor shall provide the construction manager with daily reports of the piles ready for inspections, in groupings, by the pumping location. It is the responsibility of the Contractor to adequately inform the Special inspector when piles are ready to be inspected. Any work completed without approval is at the Contractors risk.

The contractor shall notify the Special Inspector a minimum of one (1) week, seven (7) calendar days, in advance of the pile locations ready for inspection. This notification shall be in the form of a written list that identifies the pile location and its current stage in the repair process.

Any exceptions noted during the Special Inspectors dive inspection shall be submitted to the Contractor within 16 hours of the inspection. All exceptions and re-work will be submitted to the Construction Manager within 48 hours of the initial inspection, or before the cleaning window expires, whichever is soonest. The Special Inspector must generate field reports for all inspections. The field reports shall be submitted to the Construction Manager and Engineer of Record for review.

1.11 GENERAL CONDITIONS

The Contractor shall commence and perform the Work expeditiously in accordance with the Contractor's construction schedule with adequate, trained forces and shall achieve substantial completion and final completion within the times stated within the schedule.

Within the Form of Proposal, provide the total number of days which the Proposer proposes to complete the Work. The schedule is to commence with issuance of the Owner’s Purchase Order.

1.12 EXISTING WORK

A. Remove or alter existing work in such a manner as to prevent injury or damage to any portions of the existing work that remains.

B. Repair or replace portions of existing work which have been altered during construction operations to match existing or adjoining work, as approved by the Owner. At the completion of operations, existing work shall be in a condition equal to or better than that which existed before new work started.

1.13 LOCATION OF UNDERGROUND FACILITIES

A. Coordinate with the Owner on the location of underground utilities and which utilities are to remain and be protected, and which are to be removed.

B. Notify the Owner at least 24 hours prior to starting excavation work.

1.14 QUALITY ASSURANCE

A. Use adequate number of skilled work personnel who are thoroughly trained and experienced in the necessary trades, and familiar with the specified requirements and methods required for proper performance of the work outlined in this specification.

B. The Contractor shall coordinate the work to insure no conflicts occur to compromise the timely completion of all work specified.

1.15 WORKING CONDITIONS

A. The Contractor is responsible for any precautions and scheduling necessary in order to maintain this status. Work may begin only after a schedule representing an acceptable plan is approved by the Owner.

B. The Contractor shall coordinate day-to-day activities with the Owner. All conflicts will be resolved by the Owner's representative.

C. The Owner shall be notified a minimum of three days prior, when any floats are required to be moved within North or South Cove.

1.16 WORKING HOURS

The Contractor is permitted to perform construction work between the hours of 7:00 AM and 4:30 PM Mondays through Fridays, excluding Saturdays, Sundays, and Federal Holidays. Work performed at any other time other than these periods will only be allowed pending approval of the Owner, following a 48 hour advanced request (72 hour for Sundays and Holidays) and a DSBS after hours work permit.

1.17 AVAILABILITY OF UTILITIES

A. Electrical: The Contractor shall provide their own electrical power and equipment. OSHA requirements will govern the use of such utility.

B. Water: The Contractor will be responsible for supplying their own water and equipment, including all hoses, adapters and backflow preventer as required.

C. Sanitary Facilities: The Contractor shall be responsible for furnishing and maintaining temporary toilet facilities for their employees, and for the Owner's Engineer/Diver's.

D. The Contractor is responsible for the cost of all utilities.

1.18 EQUIPMENT

The Contractor shall supply all equipment necessary to perform all work, including but not limited to cleaning materials, ladders, etc.

1.19 RECEIPT OF MATERIALS

Shipments of equipment, materials, and supplies shall be addressed to the Contractor, not the Owner. The Contractor shall provide all equipment, materials, and labor for unloading and storage. The Owner will not accept shipments for the Contractor.

1.20 STORAGE OF MATERIALS

Contractor's materials may be stored on site at a location that is approved by the Owner.

1.21 EXISTING MATERIALS

The Owner shall have the opportunity to salvage all materials removed prior to disposal by Contractor.

1.22 SITE OFFICE FACILITIES AND STORAGE SHED

A. The Contractor shall be required to provide enclosures at the project locations at his own cost. Install and connect all utility services to said enclosure within five (5) days of start of work.

B. The enclosure shall be for the express use of the Resident Engineer.

C. Temporary Electrical Services:

1. Electrical work required for the enclosure will be furnished and maintained under this contract.

2. The Contractor shall furnish, install and maintain a temporary electric feeder to the Resident Engineer's enclosure immediately upon its placement at the job site.

3. The temporary electric feeder shall be at least 3 No. 6 THW wire and shall be protected by a 60 ampere fused safety switch, complying with codes and utility requirements having jurisdiction.

4. Make all arrangements and pay all costs to provide electric service.

5. Pay all costs for current consumed and for maintaining system in operating condition, including furnishing of necessary bulb replacements, lamps, etc., for thirty (30) calendar days after date of substantial completion acceptance.

6. Disposition of electric work: Upon expiration date in sub-paragraph c, the temporary feeder, safety switch, etc., shall be removed and disposed of as directed.

7. All repair work due to these removals shall be the responsibility of the Contractor at no additional cost to the Owner.

D. Maintenance:

1. The Contractor shall provide and pay all costs for heat and fuel, and regular janitor service. Furnish toilet paper, cloth towels, soap, and all other necessary equipment needed and maintain the field office in first-class condition, including all repairs, until 30 days after the date of substantial completion acceptance.

2. Upon final acceptance of all work under the contract, unless sooner directed, the Contractor shall have all utility services disconnected and capped to the satisfaction of the Resident Engineer.

E. Permits
The Contractor shall make the necessary arrangements for, and obtain all permits required for this work.

F. The Contractor shall provide his own storage. No equipment or materials storage will be provided by the Owner.

1.23 POWER OUTAGE

Needed power outages shall be arranged only with prior approval from the Owner, with duration and affected areas held to a minimum.

1.24 FINAL INSPECTION

Final Inspection will not be made until all work under the contract is complete. The Contractor shall notify the Owner in writing a minimum of one (1) week prior to the date on which the project will be ready for final inspection.

1.25 MATERIAL DISPOSAL

A. All discarded material shall be removed from the Owner's property and disposed of in an approved site complying with all Local, State, and Federal regulations. Certified weight tickets shall be supplied to the Owner within 15 days of the date of the weight ticket for all trash and construction debris disposed. All dumpsters/containers shall be supplied by the Contractor. The contractor shall provide appropriate signs or covers to prevent use by Tenants.

B. No material shall be washed or swept out of equipment or vehicles (including concrete from chutes of trucks, loose debris, etc.) onto Owner property or in the water. Any material spilled from Contractor furnished dumpsters/containers shall be immediately cleaned up by the Contractor.

1.26 RECYCLABLES

The Contractor shall recycle or reuse all material designated as recyclable or prohibited from landfilling. Definitions for recyclables and landfill prohibited material can be obtained from the contracted trash hauler. Certified weight tickets shall be supplied to the Owner within 15 days of the date of removal from the facility for all material recycled or reused, and for landfill prohibited materials.

1.27 AS-BUILT DRAWINGS

A. The Owner will furnish one complete full size set of black and white prints of all drawings which shall be used to indicate any changes from the contract set. Each sheet shall be marked "AS-BUILT DRAWINGS" in red, and all changes or modifications shall be noted thereon by the Contractor. Electronic copies in PDF format shall be submitted as well.

B. Changes shall be noted as they progress during the construction process for all trades. A working set of drawings shall be made available for review by the Owner or Owner's Representative upon request.

C. Keep "AS-BUILT DRAWINGS" current. Do not permanently conceal any work until the required information has been accurately recorded.

D. Mark-ups and changes to the as-built drawings shall conform to the following color code:

Red - Architectural and Structural Work

Green - Electrical Work

Blue - Written work

Submit a complete set of “AS-BUILT DRAWINGS” to the Owner when all work has been completed, or as directed.

1.28 PART II - PRODUCTS

Not used.

1.29 PART III - EXECUTION

Not used.

END OF SECTION 01110

PART 1.0 - GENERAL

1.01 USE OF PREMISES

A. Use of Site: Limit use of premises to work in areas indicated. Do not disturb portions of site beyond areas in which the Limit of Work is indicated.

1. Limit of Work: Confine construction operations to those areas delineated as included in the Contract Documents.

2. Owner Occupancy: Allow for Owner access and occupancy of portions of the site and for use by the public at any and all times during the life of the contract. The Owner reserves the right to maintain and provide full public access to completed portions of the Battery Park City Esplanade within the contract limits at any time during the entire life of the contract. Contractor will be responsible for securing and maintaining temporary construction fencing as necessary to achieve and maintain this access.

3. Contractor shall, throughout the life of the contract, maintain clear access to all areas of the Esplanade to personnel of Battery Park City Authority (Owner) for maintenance and repair operations. Specifically, the Owner and/or its agents shall be unencumbered from performing all required watering, planting, and maintenance operations for all areas adjacent to and within the contract limits.

4. Construction Gates / Entrances: Keep all construction gates / entrances serving the premises clean, clear, and available to the Owner, Owner's employees, and emergency vehicles at all times. Do not use these areas for parking or storage of materials.

    a. Schedule deliveries to minimize use of construction gates and entrances.

    b. Schedule deliveries to coordinate with other contractor's gaining access to the site.

    c. Provide flagger services for all deliveries into and out of the site so as to protect the public.

    d. Secure all construction entrances and gates to the site at all times.

    e. Provide durable signage limiting public access to the construction site at all construction gate / entrances as directed by the Construction Manager.

    f. Schedule deliveries to minimize space and time requirements for storage of materials and equipment on-site.

5. Use of Existing Site: Maintain existing site throughout the construction period. Repair damage caused by construction operations as previously outlined.

1.02 OCCUPANCY REQUIREMENTS

A. Partial Owner Occupancy: Owner may occupy portions of the site during the construction period. Contractor shall cooperate and coordinate with Owner during construction operations to minimize conflicts and facilitate Owner usage. Perform the Work so as not to interfere with Owner's operations.

PART 2.0 - PRODUCTS

Not used.

PART 3.0 - EXECUTION

Not used.

END OF SECTION 01140

PART 1.0 - GENERAL

1.01 RELATED DOCUMENTS

A. Drawings and general provisions of Contract, including General and Supplementary Conditions and Division-1 Specification sections, apply to this section.

1.02 SUMMARY

A. This Section includes administrative provisions for coordinating construction operations on Project including, but not limited to, the following:

1. General project coordination procedures.
2. Conservation.
3. Coordination Drawings.
4. Administrative and supervisory personnel.
5. Project meetings.

B. Each contractor shall participate in coordination requirements. Certain areas of responsibility will be assigned to a specific contractor.

C. Related Sections: The following Sections contain requirements that relate to this Section:

1. Division 1 – Section “Construction Progress Documentation” for preparing and submitting the Contractor’s Construction Schedule.
2. Division 1 – Section “Execution Requirements” for procedures for coordinating general installation and field-engineering services, including establishment of benchmarks and control points.
3. Division 1 – Section “Closeout Procedures” for coordinating Contract closeout.

1.03 COORDINATION

A. Coordination: The Contractor shall coordinate its construction operations and those of its subcontractors, with those of other contractors, projects, and entities to ensure efficient and orderly installation of each part of the Work. Each contractor shall coordinate its operations with BPCA operations, included in different Sections that depend on each other for proper installation, connection, and operation.

1. Schedule construction operations in sequence required to obtain the best results where installation of one part of the Work depends on installation of other components, before or after its own installation.
2. Coordinate installation of different components with other contractors to ensure maximum accessibility for required maintenance, service, and repair.
3. Make adequate provisions to accommodate items scheduled for later installation.
4. Provide detailed written construction work plans within 5 days of award in a format and containing information as requested by the Construction Manager.

B. Where necessary, prepare memoranda for distribution to each party involved, outlining special procedures required for coordination. Include such items as required notices, reports, and list of attendees at meetings.

1. Prepare similar memoranda for Owner and separate contractors if coordination of their Work is required.

C. Administrative Procedures: Coordinate scheduling and timing of required administrative procedures with other construction activities and activities of other contractors to avoid conflicts and to ensure orderly progress of the Work. Such administrative activities include, but are not limited to, the following:

1. Preparation of Contractor's Construction Schedule.
2. Preparation of the Schedule of Values for payment to completed work.
3. Installation and removal of temporary facilities and controls.
4. Delivery and processing of submittals.
5. Progress meetings.
6. Pre-installation conferences.
7. Project closeout activities.

D. Conservation: Coordinate construction activities to ensure that operations are carried out with consideration given to conservation of energy, water, and materials.

1. Salvage materials and equipment involved in performance of, but not actually incorporated into, the Work.

1.04 SUBMITTALS

A. Coordination Drawings / Work Plans: Prepare Coordination Drawings and/or detailed work plans where careful coordination is needed for installation of products and materials fabricated by separate entities and/or as requested by the Owner's Representative. Prepare coordination drawings and/or work plans where limited space availability necessitates utilization of space for efficient installation of different components.

1. Indicate relationship of components shown on separate Shop Drawings and/or work plans.
2. Indicate required installation sequences.

B. Staff Names: Within 5 days of award, submit a list of principal staff assignments, including superintendent and other personnel in attendance at Project site. Identify individuals and their duties and responsibilities; list addresses and telephone numbers, including cellular and office telephone numbers. Provide names, addresses, and telephone numbers of individuals assigned as standbys in the absence of individuals assigned to Project. Post copies of list in Project meeting room, in temporary field office, and by each temporary telephone. Maintain and resubmit this list throughout the life of the project to record any changes.

1.05 ADMINISTRATIVE AND SUPERVISORY PERSONNEL

A. General: In addition to Project superintendent, provide other administrative and supervisory personnel as required for proper performance of the Work.

1. Project Manager: Submit resume confirming a minimum of 15 years of underwater construction experience.

2. Project superintendent: Submit resume confirming a minimum of 10 years of underwater construction experience.

3. Office Engineer: Submit resume confirming a minimum of 5 years of marine construction experience.

4. Dive Superintendent: Submit resume confirming a minimum of 10 years of underwater construction experience.

5. Site Safety Representative: Submit resume confirming a minimum of 5 years of underwater construction site safety experience.

6. Other Personnel: Include resumes for any additional special personnel required for coordination of operations with other contractors deemed necessary or as requested by the Owner or Owner's Representative.

1.06 PROJECT MEETINGS

A. General: Contractor shall schedule and conduct all meetings and conferences at Project site, unless otherwise indicated or requested by the Owner or Owner's Representative. Such meeting tasks shall include but are not limited to:

1. Attendees: Inform participants and others involved, and individuals whose presence is required, of date, time, and location of each meeting. Notify Owner, and Construction Manager of scheduled meeting dates, times, and locations.

2. Agenda: Prepare the meeting agenda. Distribute the agenda to all invited attendees.

3. Minutes: Record significant discussions and agreements achieved. Distribute the meeting minutes to everyone concerned, including Owner, Construction Manager, and the Engineer, within 5 days of the meeting.

B. Pre-construction Conference: Contractor shall schedule a pre-construction conference before starting construction, at a time convenient to Owner, Construction Manager and the Engineer, but no later than five (5) business days after execution of the Agreement. Conduct the meeting to review responsibilities and personnel assignments.

1. Attendees: Authorized representatives of Owner, Construction Manager, Engineer, and their consultants; Contractor and its superintendents; major subcontractors; manufacturers; suppliers; and other concerned parties shall attend the conference. All participants at the conference shall be familiar with Project and authorized to conclude matters relating to the Work.

2. Agenda: Discuss items of significance that could affect progress, including but not limited to the following:

a. Tentative construction schedule.

b. Phasing.

c. Critical path work sequencing.

d. Designation of responsible personnel.

e. Procedures for processing field decisions and Change Orders.

f. Procedures for processing Applications for Payment.

g. Distribution of the Contract Documents.

h. Submittal procedures.

i. Preparation of Record Documents.

j. Use of the premises.

k. Responsibility for temporary facilities and controls.

l. Parking availability.

m. Office, work, and storage areas.

n. Equipment deliveries and priorities.

o. Testing and inspection requirements.

p. Required performance results.

q. Protection of construction personnel.

r. Project Safety and First aid.

s. Security.

t. Progress cleaning.

u. Working hours.

v. MBE/WBE compliance reporting requirements.

3. Record within meeting minutes significant conference discussions, agreements, and disagreements.

4. Do not proceed with installation if the conference cannot be successfully concluded. Create and distribute an action item list with outstanding tasks developed and discussed in said meeting. Initiate whatever actions are necessary to resolve impediments to performance of the Work and reconvene the conference at earliest feasible date.

C. Progress Meetings: Conduct progress meetings every two (2) weeks. Coordinate dates of meetings with preparation of payment requests.

1. Attendees: In addition to representatives of Owner, Construction Manager, and Engineer, each contractor, subcontractor, supplier, and other entity concerned with current progress or involved in planning, coordination, or performance of future activities shall be represented at these meetings. All participants at the conference shall be familiar with Project and authorized to conclude matters relating to the Work.

2. Agenda: Review and correct or approve minutes of the previous meeting. Review other items of significance that could affect progress. Include topics for discussion as appropriate to status of Project. Review and update progress of the action item list.

    a. Contractor's Construction Schedule: Review progress since the last meeting. Determine whether each activity is on time, ahead of schedule, or behind schedule, in relation to Contractor's Construction Schedule. Determine how construction behind schedule will be expedited; secure commitments from parties involved to do so. Discuss whether schedule revisions are required to ensure that current and subsequent activities will be completed within the Contract Time.

    b. Review present and future needs of each entity present, including but limited to the following:
        (i) Interface requirements.
        (ii) Sequence of operations.
        (iii) Status of submittals.
        (iv) Deliveries.
        (v) Off-site fabrication.
        (vi) Access.
        (vii) Site utilization.
        (viii) Temporary facilities and controls.
        (ix) Work hours.
        (x) Hazards and risks.
        (xi) Progress cleaning.
        (xii) Quality and work standards.
        (xiii) Change Orders.
        (xiv) Documentation of information for payment requests.

3. Reporting: Distribute minutes of the meeting to each party present and to parties who should have been present. Include a brief summary, in narrative form, of progress since the previous meeting and report. Updated action item lists shall be included.

    a. Schedule Updating: Revise Contractor's Construction Schedule after each progress meeting where revisions to the schedule have been made or recognized. Issue revised schedule concurrently with the report of each meeting.

D. Coordination Meetings: Conduct Project coordination meetings on an as needed basis. Project coordination meetings are in addition to specific meetings held for other purposes, such as progress meetings and pre-installation conferences.

1. Attendees: In addition to representatives of Owner, Construction Manager, and Engineer, each contractor, subcontractor, supplier, and other entity concerned with current progress or involved in planning, coordination, or performance of future activities shall be represented at these meetings. All participants at the conference shall be familiar with Project and authorized to conclude matters relating to the Work.

2. Agenda: Review and correct or approve minutes of previous coordination meetings. Review other items of significance that could affect progress. Include topics for discussion as appropriate to status of Project. Review and update progress of the coordination meeting action item list.

    a. Combined Contractor's Construction Schedule: Review progress since the last coordination meeting. Determine whether each contract is on time, ahead of schedule, or behind schedule, in relation to Combined Contractor's Construction Schedule. Determine how construction behind schedule will be expedited; secure commitments from parties involved to do so. Discuss whether schedule revisions are required to ensure that current and subsequent activities will be completed within the Contract time.

    b. Schedule Updating: Revise Combined Contractor's Construction Schedule after each coordination meeting where revisions to the schedule have been made or recognized. Issue revised schedule concurrently with report for each meeting.

    c. Review present and future needs of each contractor present, including but not limited to the following:
        (i) Interface requirements.
        (ii) Sequence of operations.
        (iii) Status of submittals.
        (iv) Deliveries.
        (v) Off-site fabrication.
        (vi) Access.
        (vii) Site utilization.
        (viii) Temporary facilities and controls.
        (ix) Work hours.
        (x) Hazards and risks.
        (xi) Progress cleaning.
        (xii) Quality and work standards.
        (xiii) Change Orders.

3. Reporting: Record meeting results and distribute copies within two (2) days to everyone in attendance and to others affected by decisions or actions resulting from each meeting. Separate coordination action item lists shall be prepared for these meetings.

PART 2.0 - PRODUCTS
Not used.

PART 3.0 - EXECUTION
Not used.

END OF SECTION 01310

PART 1.0 - GENERAL

1.01 SUBMITTALS

Submit the following in accordance with Section entitled "Submittal Procedures."

A. Schedules

1. Construction schedule (Owner)
2. Material delivery schedule (Owner)

1.02 CONSTRUCTION SCHEDULE

Within five (5) business days after receipt of the Notice of Award, prepare and submit to the Owner's representative for approval a Critical Path Method (CPM) Schedule.

1.03 MATERIAL DELIVERY SCHEDULE

A. Initial Schedule
Within ten (10) calendar days after approval of the proposed construction schedule, submit for Owner's representative approval a schedule showing procurement plans for materials and equipment. Submit in the format and content as prescribed by the Owner's representative, and include as a minimum the following information:

1. Description.
2. Date of the purchase order.
3. Promised shipping date.
4. Name of the manufacturer or supplier.
5. Date delivery is expected.
6. Date the material or equipment is required, according to the current construction schedule.

1.04 NETWORK ANALYSIS SYSTEM (NAS)

A. As an alternative to the critical path method (CPM) schedule, the Contractor may use, subject to the approval of the Owner's Representative, some other computer generated network analysis system affording similar and equal information and control to that provided by the CPM.

B. The schedule shall have a minimum of 25 activities and a maximum of 200 activities. The schedule shall identify as a minimum:

1. Construction time for all major systems and components;
2. Manpower requirements for each activity;
3. Major submittals and submittal processing time; and
4. Major material and equipment lead time.
5. Bent sequence for inspection purposes.

C. CPM Submittals and Procedures

Submit all network analysis and updates electronically via e-mail. The network analysis system shall be submitted in Microsoft Project. The network analysis system shall be kept current, with changes made to reflect the actual progress and status of the construction.

1.05 UPDATED SCHEDULES

Update the construction schedule and material delivery schedule at bi-weekly intervals to correspond to payment applications or when schedule has been revised. Reflect any changes occurring since the last update. Submit copies of the purchase orders and confirmation of the delivery dates as directed by the Owner's representative.

PART 2.0 - PRODUCTS

Not used.

PART 3.0 - EXECUTION

Not used.

END OF SECTION 01320

PART 1.0 - GENERAL

1.01 DEFINITIONS

A. Submittal: Submittals requirements are specified in the respective specification sections.

B. Types of Submittals (SD)

1. SD-01 Preconstruction Submittals, including but not limited to:

a. Certificates of Insurance,

b. List of Proposed Subcontractors,

c. List of Proposed Products,

d. Construction Progress Schedule,

e. Submittal Register,

f. Schedule of Prices,

g. Health and Safety Plan,

h. Work Plan,

i. Quality Control Plan,

j. Environmental Protection Plan,

k. Site Utilization Plan.

2. SD-02 Shop Drawings, including but not limited to:

a. Shop drawings of each pile repair type are required.

b. Shop drawings shall not be copies of the design drawings with notation.

c. Drawings, diagrams and schedules specifically prepared to illustrate some portion of the work.
(i) Bottom seal
(ii) Pump ports

d. Diagrams and instructions from a manufacturer or fabricator for use in producing the product and acts as aids to the Contractor for integrating the product or system into the project.

e. Drawings prepared by or for the Contractor to show how multiple systems and interdisciplinary work will be coordinated. An attachment shall be provided with the Shop Drawings which clearly define the methodology for each repair type.

f. Approval of shop drawings shall not relieve the Contractor of the responsibility for any errors or for furnishing materials of the proper size.

3. SD-03 Product Data, including but not limited to:
Product data includes but is not limited to the following:

a. FRP formwork

b. Epoxy mortar

c. Hand Pack Material

d. Cementitious grout

e. Bottom Seal

f. Standoffs

g. Engineered Products for Form System

h. Grout Bags

i. Samples of warranty language when the contract requires extended product warranties.

4. SD-04 Samples

5. SD-05 Design Data, including but not limited to:

a. Epoxy Mortar mix

b. Cementitious grout mix

c. FRP form calculations

d. Product pumping calculations

6. SD-06 Test Reports, including but not limited to:

a. Report signed by authorized official of testing laboratory that a material, product or system identical to the material, product or system to be provided has been tested in accord with specified requirements. (Testing must have been within three (3) years of date of contract award for the project.)

b. Report which includes findings of a test required to be performed by the Contractor on an actual portion of the work or prototype prepared for the project before shipment to job site.

c. Report which includes finding of a test made at the job site or on sample taken from the job site, on portion of work during or after installation.

d. The New York City Department of Small Business Services (DSBS) Permit shall be satisfied under the direction of the Construction Manager. This includes but is not limited to the concrete testing agency and concrete supplier, TR2 and TR3 filings, and the Contractor's PW2 filing.

7. SD-07 Certificates, including but not limited to:

a. Statements signed by responsible officials of manufacturer of product, system or material attesting that product, system or material meets specification requirements. Must be dated after award of project contract and clearly name the project.
(i) Epoxy Mortar
(ii) Cementitious Grout
(iii) FRP form

8. SD-08 Manufacturer's Instructions, including but not limited to:

a. Preprinted material describing installation of a product, system or material, including special notices and Material Safety Data sheets concerning impedances, hazards and safety precautions.

9. SD-09 Closeout Submittals, including but not limited to:

a. The Construction Manager is responsible for providing the following to the Engineer of Record for review prior to the project close out:
(i) Field Reports
(i) Upon completion of the work, and prior to the final project closeout, the Construction Manager shall submit to the Engineer of Record all Field Reports from the engineering review site visits. These include, but are not limited to:
(ii) Certification by the Special Inspector that all piles have been repaired as per the contract documents.
(iii) Certification by the Special Inspector that all test results have meet or exceeded the minimum requirements laid out in the Contract Documents.
(iv) Field reports from the Special Inspector confirming that all epoxy mortar and cementitious grout pumping operations and all the material placed were performed in accordance with the Contract Documents.
(ii) As-Built Drawings:
(i) Contractor shall submit six (6) sets of drawings, marked “As-Built” within four (4) weeks upon Contractor demobilization. These drawings shall be submitted to the Construction Manager, who shall forward to the Engineer of Record. Approval from the Engineer of Record is required for the final project closeout.
(iii) Test Reports:
(i) Upon completion of the work, and prior to the final project closeout, the Construction Manager shall submit to the Engineer of Record all Test Reports from the required materials and products testing as laid in the Contract Documents. Test reports must confirm that all materials and products placed during the Work have met or exceeded the minimum requirements of the Contract Documents in order for the Engineer of Record’s approval. All Test Reports must be approved by the Engineer of Record for the final project closeout.
(iv) Photographs
(i) The Construction Manager shall submit to the Engineer of Record a typical photograph illustrating each type of repair in its Pre-Inspection and Post-Inspection completeness.
(v) The items required for final review by the Engineer of Record are not limited to those listed above.

10. For this project, the requirements under SD-03 and SD-08 shall be combined under one submittal for “Product Data”. Product data will be submitted for all repairs identified in the contract drawings. The product data submittal may be combined with a number of submittals which reference one particular repair.

C. Approving Authority: Person authorized to approve submittal. The Engineer of Record shall review submittals in regard to materials, methodology, shop drawings and other components involved in the quality assurance of the work. The Construction Manager shall review submittals in regard to but not limited to site utilization, disposal, coordination, environmental controls, schedule, safety and health requirements, etc.

D. Work: As used in this section, on- and off-site construction required by contract documents, including labor necessary to produce submittals, construction, materials, products, equipment, and systems incorporated or to be incorporated in such construction.

PART 2.0 - PRODUCTS

Not used

PART 3.0 - EXECUTION

3.01 SUBMITTAL REGISTER

A. Within five (5) calendar days after receipt of Notice to Proceed, Contractor shall provide submittal register listing all submittals required by the contract. Contractor shall maintain at the site, an up-to-date submittal register showing the status of all submittals as the work progresses. The submittal register format is subject to review and approval by the Owner's Representative. The Contractor shall indicate critical submittals and critical dates for approval. The register shall also include the following at a minimum:

1. Activity Number: Activity number from the project schedule.
2. Transmittal Number: Contractor assigned list of consecutive numbers.
3. Contractor Submittal Date: Scheduled date for approving authority to receive submittals.
4. Contractor Approval Date: Date Contractor needs approval of submittal.
5. Contractor Material Date: Date that Contractor needs material delivered to Contractor control.

B. The Construction Manager or Engineer of Record will not review submittals until the register has been submitted in accordance with the previous paragraph and approved. Should a submittal register be generated by the Engineer of Record, it can be used as a guideline by the Contractor but does not relieve him of submissions required by the Contract Documents that may have been omitted.

C. Items may be added or removed from the Submittal Register throughout the duration of the Work, as desired by the Construction Manager or Engineer of Record. Additional submittals that are not listed in the Submittal Register may be required as per the Construction Manager's contract.

3.02 PROCEDURES FOR SUBMITTALS

A. Contractor shall make submittals required by the Contract Documents, and revise and resubmit as necessary to establish compliance with the specified requirements. Submittals that are not required will not be reviewed by the Construction Manager.

1. Constraints

    a. Submittals listed or specified in this contract shall conform to provisions of this section, unless explicitly stated otherwise.

    b. Submittals shall be complete for each definable feature of work; components of definable feature interrelated as a system shall be submitted at same time.

    c. When acceptability of a submittal is dependent on conditions, items, or materials included in separate subsequent submittals, submittal will be returned without review.

    d. Approval of a separate material, product, or component does not imply approval of assembly in which item functions.

2. Scheduling

    a. Coordinate scheduling, sequencing, preparing and processing of submittals with performance of work so that work will not be delayed by submittal processing. Allow for potential requirements to resubmit.

    b. Except as specified otherwise, allow for review period, beginning with receipt by approving authority, which includes at least 5 working days for submittals. Period of review for each re-submittal is the same as for initial submittal.

3.03 VARIATIONS

A. Variations from contract requirements require the Engineer of Record approval. Do not substitute materials, equipment, or methods unless such substitution has been specifically accepted in writing by the Construction Manager.

1. Considering Variations: Discussion with the Construction Manager prior to submission will help ensure functional and quality requirements are met and minimize rejections and re-submittals. When contemplating a variation which results in lower cost, consider submission of the variation as a Value Engineering Change Proposal (VECP).

2. Proposing Variations: When proposing a variation, deliver written request to the Construction Manager, with documentation of the nature and features of the variation and why the variation is desirable and beneficial to the Owner. If lower cost is a benefit, also include an estimate of the cost-savings. In addition to documentation required for variation, include the submittals required for the item. Clearly mark the proposed variation in all documentation, identify variations from the contract requirements and changes in other work or products.

3. Warranting That Variations Are Compatible: When delivering a variation for approval, Contractor warrants that this contract has been reviewed to establish that the variation, if incorporated, will be compatible with other elements of work. In submitting a substitution or variation, the Contractor represents that he will coordinate the installation of accepted substitutions or variation, and additional costs or delays caused by the substitution or variation will not constitute grounds for adjustments to the contract.

4. Review Schedule Is Modified: In addition to normal submittal review period, a minimum period of five (5) and maximum period of 14 working days will be allowed for consideration by the Owner of submittals with variations.

3.04 CONTRACTOR'S RESPONSIBILITIES

A. Determine and verify field measurements, materials, field construction criteria; review each submittal; and check and coordinate each submittal with requirements of the work and contract documents.

Transmit submittals to Construction Manager in accordance with schedule on approved Submittal Register, and to prevent delays in the work, delays to the Owner, or delays to separate Contractors.

B. Advise Construction Manager as required by paragraph entitled: "Variations."

C. Correct and resubmit submittal as directed by approving authority. When resubmitting disapproved transmittals or transmittals noted for re-submittal, the Contractor shall provide copy of that previously submitted transmittal including all reviewer comments for use by approving authority. Direct specific attention in writing or on resubmitted submittal, to revisions not requested by approving authority on previous submissions.

D. Submittals are to be done electronically, via email to the team determined by the owner, in PDF format.

E. Furnish hard copies of submittal when requested by the Construction Manager, to a limit of 6 copies per submittal.

F. Complete work which must be accomplished as basis of a submittal in time to allow submittal to occur as scheduled.

G. Ensure no work has begun until submittals for that work have been reviewed and returned stamped by the Engineer of Record, as explained in Paragraph 3.08 D or this Section, except to the extent that a portion of work must be accomplished as basis of submittal.

3.05 DELIVERY OF SUBMITTALS

A. Transmittal Form: Transmit each submittal, except sample installations and sample panels, to office of approving authority. Transmit submittals electronically with transmittal form(s) prescribed by Construction Manager and standard for project. The transmittal form shall identify, at a minimum, Contractor, indicate date of submittal, and include information prescribed by transmittal form and required in paragraph entitled "Identifying Submittals." Process transmittal forms to record actions regarding sample panels and sample installations. All submittals must be sent to the Construction Manager, who shall forward submittals on to the Engineer of Record, if required, for approval.

B. Identifying Submittals: Identify submittals, except sample panel and sample installation, with the following information permanently adhered to or noted on each separate component of each submittal and noted on transmittal form. Mark each copy of each submittal identically, at a minimum, with the following:

1. Construction contract number.

2. Section number of the specification section by which submittal is required.

3. Submittal description (SD) number of each component of submittal.

4. When a resubmission, add alphabetic suffix on submittal description, for example, SD-10A, to indicate resubmission.

5. Name, address, and telephone number of subcontractor, supplier, manufacturer, and any other second tier Contractor associated with submittal.

6. Product identification and location in project.

3.06 FORMAT OF SUBMITTALS

A. Format for SD-02 Shop Drawings

1. Shop drawings shall not be less than 8½ by 11 inches nor more than 22 by 34 inches. Submit in the form of blueline or blackline prints of each sheet. Blue prints will not be accepted.

2. Present 8½ by 11 inch sized shop drawings as part of the bound volume for submittals required by section. Present larger drawings in sets.

3. Include on each drawing, at a minimum, the drawing title, number, date, and revision numbers and dates, in addition to information required in paragraph entitled "Identifying Submittals."

4. Dimension drawings, except diagrams and schematic drawings; prepare drawings demonstrating interface with other trades to scale. Shop drawing dimensions shall be the same unit of measure as indicated on the contract drawings. Identify materials and products for work shown.

5. Shop Drawings shall not be direct reproductions of contract’s design drawings.

B. Format of SD-03 Product Data and SD-08 Manufacturer's Instruction's

1. Present product data submittals for each section as a complete, bound volume. Include table of contents, listing page and catalog item numbers for product data.

2. Indicate, by prominent notation, each product which is being submitted; indicate specification section number and paragraph number to which it pertains

3. Supplement product data with material prepared for project to satisfy submittal requirements for which product data does not exist. Identify this material as developed specifically for project.

C. Format of SD-04 Samples

1. Furnish samples in sizes below, unless otherwise specified or unless the manufacturer has prepackaged samples of approximately the same size as specified:

a. Sample of Equipment or Device: Full size.

b. Sample of Materials Less Than 2 by 3 inches: Built up to 8½ by 11 inches.

c. Sample of Materials Exceeding 8½ by 11 inches: Cut down to 8½ by 11 inches and adequate to indicate color, texture, and material variations.

d. Sample of Linear Devices or Materials: 10 inch length or length to be supplied, if less than 10 inches. Examples of linear devices or materials are conduit and handrails.

e. Sample of Non-Solid Materials: Pint. Examples of non-solid materials are sand and paint.

f. Color Selection Samples: 2 by 4 inches.

g. Sample Panel: 4 by 4 feet.

h. Sample Installation: 100 square feet.

D. Format of SD-05 Design Data and SD-07 Certificates

1. Provide design data and certificates on 8½ by 11 inches paper. Provide a bound volume for submittals containing numerous pages.

E. Format of SD-06 Test Reports

1. Provide reports on 8½ by 11 inch paper in a complete bound volume.

2. Indicate by prominent notation, each report in the submittal. Indicate specification number and paragraph number to which it pertains.

F. Format of SD-01 Preconstruction Submittals and SD-09 Closeout Submittals

1. When submittal includes a document which is to be used in project or become part of project record, other than as a submittal, do not apply Contractor's approval stamp to document, but to a separate sheet accompanying document.

2. As-Built drawings sets shall be full sized (24” x 32”) and represent the installed condition of the Work. The drawings shall clearly mark out where the installed condition differs from the Contract Documents. In addition to the hard copies, the As-Built drawings shall be submitted electronically in both AutoCAD format (.dwg) version 2007 or newer and Portable Document Format (.pdf).

3. Photographs shall be submitted electronically in JPEG-format (.jpg) as well as Portable Document Format (.pdf). Photographs shall be in color and shall be a minimum of 3 megapixels in size. The location, photo directions, elevation, and date/time taken shall be submitted in conjunction with the PDF submission.

3.07 QUANTITY OF SUBMITTALS

A. Unless otherwise noted, all submittals should be in PDF format and transmitted electronically. If hard copies are requested:

1. Number of copies of SD-02 Shop Drawings

a. The Owner and/or Construction Manager may designate that all submittals shall be "paperless" and the contractor may transmit submittals via electronic file.

b. Submit four (4) copies of submittals of Shop Drawings. One (1) print with the Construction Manager's review comments will be returned to the Contractor. The Contractor may make and distribute such copies as desired.

2. Number of Copies of SD-03 Product Data and SD-08 Manufacturer's Instructions

    a. Submit in compliance with quantity requirements specified for shop drawings.

3. SD-04 Number of Samples

    a. Submit two (2) samples, or two (2) sets of samples showing range of variation, of each required item. One (1) approved sample or set of samples will be retained by approving authority and one (1) will be returned to Contractor.

    b. Submit one (1) sample panel. Include components listed in technical section or as directed.

    c. Submit one (1) sample installation, where directed.

    d. Submit one (1) sample of non-solid materials.

4. Number of Copies SD-05 Design Data and SD-07 Certificates

    a. Submit in compliance with quantity requirements specified for shop drawings.

5. Number of Copies SD-06 Test Reports

    a. Submit in compliance with quantity requirements specified for shop drawings.

6. Number of Copies of SD-01 Preconstruction Submittals and SD-09 Closeout Submittals.

    a. Unless otherwise specified, submit administrative submittals compliance with quantity requirements specified for shop drawings. Submit six (6) copies of all Closeout Submittals.

3.08 REVIEW BY OWNER'S REPRESENTATIVE

A. Review by the Construction Manager and Engineer of Record does not relieve the Contractor from responsibility for errors or omissions which may exist in the submitted data.

B. Revisions:

1. Make revisions required by the Construction Manager and Engineer of Record.

2. If the Contractor considers any required revision to be a change, he shall so notify the Construction Manager, in writing, in accordance with the specifications.

3. Make only those revisions directed or accepted by the Construction Manager and Engineer of Record.

C. Reimbursement of Owner's Representative's Costs:

1. In the event substitutions are proposed to the Construction Manager after the Contract has been awarded, the Construction Manager will record all time used by him and by his consultants in evaluation of each such proposed substitution.

Whether or not the Construction Manager and/or Engineer of Record accepts a proposed substitution, the Contractor may be responsible for the costs of the Construction Manager and/or Engineer of Record and consultants for all time spent by them in evaluating the proposed substitution, plus administrative fees. The costs will be deducted from outstanding pay requests due to the Contractor by way of a Change Order.

D. Engineer of Record Review Stamp:

1. The Engineer of Record will use the following approval statement when returning submittals to the Contractor as "Fabrication May Proceed" or "Do Not Fabricate":

a. "Submission has been checked for general conformance with design concept of the project. Comments made on [type of submittal] do not relieve the Contractor from compliance with requirements of the Contract Documents. Contractor is responsible for dimensions to be confirmed and correlated at the job site; for information that pertains solely to the fabrication processes or to techniques of construction; and for coordination of the work of all trades."

Fabrication May Proceed: _____ Do Not Fabricate: _____

By: _____ Date: _____

Note: _____

Actions Possible

b. The Engineer of Record review stamp will indicate the status of the submittal, and corresponding action to be taken by the Contractor as follows:

(i) Submission is in general conformance with design concept: When the Engineer of Record marks the submittal "Submission is in general conformance with design concept", the Work covered by the submittal may proceed, provided it complies with the requirements of the Contract Documents. Final payment depends on that compliance.

(ii) Submission is in general conformance with design concept, except as noted: When the Engineer of Record marks the submittal "Submission is in general conformance with design concept, except as noted", the Work covered by the submittal may proceed provided it complies with the notations on the submittal and requirements of the Contract Documents. Final payment depends on that compliance.

(iii) Revise and Resubmit: When the Engineer of Record marks the submittal "Revise and Resubmit", the Work covered by the submittal may not proceed. The submittal must be revised to comply with the notations on the submittal and requirements of the Contract Documents, and must then resubmit to the Engineer of Record prior to the commencement of the work described in the submittal. Final payment depends on that compliance.

(iv) Submission is rejected for non-conformance with design concept: When the Engineer of Record marks the submittal "Submission is rejected for non-conformance with design concept", do not proceed

with the Work covered by the submittal, including purchasing, fabrication, delivery, or other activity. Revise and prepare a new submittal according to the notations, resubmit without delay. Repeat if necessary to obtain a different action mark.

(v) Do not use, or allow others to use submittals marked “Submission is rejected for non-conformance with design concept” at the Project Site or elsewhere where Work is in progress.

PART 4.0 - MEASUREMENT AND PAYMENT

Include within the Contract prices the amount sufficient to cover all costs for work of this section. No separate payment will be made for work completed under this section. A Schedule of Values shall be submitted to and approved by the Owner's Representative.

END OF SECTION 01330

PART 1.0 - GENERAL

1.01 REFERENCES

The publications listed below form a part of this specification to the extent referenced. The publications are referred to in the text by the basic designation only.

A. AMERICAN SOCIETY FOR TESTING AND MATERIALS (ASTM)

ASTM A880	Criteria for Use in Evaluation of Testing Laboratories and Organization for Examination and Inspection of Steel, Stainless Steel, and Related Alloys
ASTM C1077	Laboratories Testing Concrete and Concrete Aggregates for Use in Construction and Criteria for Laboratory Evaluation
ASTM C31	Standard Method of Making and Curing Concrete Compressive and Flexural Test Specimens in the Field.
ASTM C39	Standard method of Test for Compressive Strength of Cylindrical Concrete Specimens.
ASTM C94	Standard Specification for Ready-Mix Concrete.
ASTM C138	Standard Method of Test for Unit Weight, Yield, and Air Content of Concrete.
ASTM C172	Standard Method of Sampling Fresh Concrete.
ASTM C192	Standard Method of Making and Curing Concrete Test Specimens in the Laboratory.
ASTM C214	Recommended Practice for Evaluation of Compression Test Results of Field Concrete.
ASTM D3740	(Agencies Engaged in the Testing and/or Inspection of Soil and Rock as Used in Engineering Design and Construction
ASTM E329	Agencies Engaged in the Testing and/or Inspection of Materials Used on Construction
ASTM E543	Evaluating Agencies that Perform Nondestructive Testing

1.02 SUBMITTALS

Submit the following in accordance with Section 01330 entitled "Submittal Procedures."

A. Contractor Production Report.

1.03 TESTING

Except as stated otherwise in the specification sections, perform sampling and testing required under this Contract.

A. Provide an independent testing laboratory qualified to perform sampling and tests required by this Contract. When the proposed testing laboratory is not accredited by an acceptable "Qualified National Authority" listed in the paragraph entitled "Qualified National Authority," submit to the Contracting Officer for approval, certified statements, signed by an official of the testing laboratory attesting that the proposed laboratory, meets or conforms to the following requirements:

1. Laboratories engaged in testing of construction materials shall meet the requirements of ASTM E329.
2. Laboratories engaged in testing of concrete and concrete aggregates shall meet the requirements of ASTM C1077.
3. Laboratories engaged in testing of soil and rock, as used in engineering design and construction, shall meet the requirements of ASTM D3740.
4. Laboratories engaged in inspection and testing of steel, stainless steel, and related alloys will be evaluated according to ASTM A880.
5. Laboratories engaged in nondestructive testing (NDT) shall meet the requirements of ASTM E543.
6. Laboratories engaged in Hazardous Materials Testing shall meet the requirements of OSHA and EPA and all other federal, state, and local requirements.

B. Qualified National Authorities are the National Voluntary Laboratory Accreditation Program (NVLAP) administered by the National Institute of Standards and Technology, the American Association of State Highway and Transportation Officials (AASHTO) program, and the American Association for Laboratory Accreditation (A2LA) program. Furnish to the Owner, a copy of the Certificate of Accreditation and Scope of Accreditation. The scope of the laboratory's accreditation shall include the test methods required by the Contract.

C. Prior to approval of non-accredited laboratories, the proposed testing laboratory facilities and records may be subject to inspection by the Engineer. Records subject to inspection include equipment inventory, equipment calibration dates and procedures, library of test procedures, audit and inspection reports by agencies conducting laboratory evaluations and certifications, testing and management personnel qualifications, test report forms, and the internal QC procedures.

D. The Owner retains the right to check laboratory equipment in the proposed laboratory and the laboratory technician's testing procedures, techniques, and other items pertinent to testing, for compliance with the standards set forth in this Contract.
Cite applicable Contract requirements, tests or analytical procedures used when reporting test results. Provide actual results and include a statement that the item tested or analyzed conforms or fails to conform to specified requirements. If the item fails to conform, notify Owner immediately. Conspicuously stamp the cover sheet for each report in large red letters "CONFORMS" or "DOES NOT CONFORM" to the specification requirements, whichever is applicable. Test results shall be signed by a testing laboratory representative authorized to sign certified test reports. Furnish the signed reports, certifications, and other documentation to the Owner. Furnish a summary report of field tests at the end of each month.

E. The Contractor shall furnish the signed reports, certifications, and a summary report of field tests at the end of each month to the Owner.

1.04 COMPLETION INSPECTIONS

A. Near the completion of all work or any increment thereof established by a completion time stated elsewhere in the specifications, the Contractor shall conduct an inspection of the work and develop a "punch list" of items which do not conform

to the approved drawings and specifications. Include in the punch list any remaining items on the "Rework Items List" which were not corrected prior to the Punch-Out Inspection. The punch list shall include the estimated date by which the deficiencies will be corrected. A copy of the punch list shall be provided to the Owner. The Contractor or staff shall make follow-on inspections to ascertain that all deficiencies have been corrected. Once this is accomplished, the Contractor shall notify the Owner that the facility is ready for the Owner "Pre-Final Inspection."

B. The Owner will perform a pre-final inspection to verify that the facility is complete and ready to be occupied. An Owner "Pre-Final Punch List" may be developed as a result of this inspection. The Contractor shall ensure that all items on this list are corrected prior to notifying the Owner that a "Final" inspection can be scheduled. Any items noted on the "Pre-Final" inspection shall be corrected in timely manner and shall be accomplished within the time slated for completion of the entire work, or any particular increment thereof if the project is divided into increments by separate completion dates.

C. The Contractor’s Project Manager, the superintendent or other primary contractor management personnel, and the Owner's Representative will be in attendance at the Final Acceptance Inspection. Additional Owner personnel may be in attendance. The final acceptance inspection will be formally scheduled by the Engineer based upon results of the "Pre-Final" inspection. Notice shall be given to the Owner at least 14 Calendar days prior to the final inspection stating that all specific items previously identified to the Contractor as being unacceptable, along with all the remaining work performed under the contract, will be complete and acceptable by the date scheduled for the final acceptance inspection.

1.05 DOCUMENTATION

A. Maintain current and complete records of on-site and off-site QC program operations and activities.

B. Contractor Production Reports are required for each day that work is performed. Account for each calendar day throughout the life of the Contract. The reporting of work shall be identified by terminology consistent with the construction schedule. Contractor Production Reports are to be prepared, signed and dated by the project superintendent and shall contain the following information:

1. Date of report, report number, name of contractor, Contract number, title and location of Contract and superintendent present.

2. Weather conditions in the morning and in the afternoon including maximum and minimum temperatures.

3. Identify work performed by corresponding Scheduled Activity No., Modification No., etc.

4. A list of Contractor and subcontractor personnel on the work site, their trades, employer, work location, description of work performed, hours worked by trade, daily total work hours on work site, and total work hours from start of construction.

5. A list of job safety actions taken and safety inspections conducted. Indicate that safety requirements have been met including the results on the following:

a. Was a job safety meeting held? (If YES, attach a copy of the meeting minutes.)

b. Were there any lost time accidents? (If YES, attach a copy of the completed OSHA report.)

c. Was crane/trenching/scaffold/high voltage electrical/high work done? (If YES, attach a statement or checklist showing inspection performed.)

d. Was hazardous material/waste released into the environment? (If YES, attach a description of meetings held and accidents that happened.)

e. List safety actions taken today and safety inspections conducted.

6. A list of equipment/material received each day that is incorporated into the job.

7. A list of construction equipment on the work site including the number of hours used, idle and down for repair.

8. Include a "remarks" section in this report which will contain pertinent information including directions received, problems encountered during construction, work progress and delays, conflicts or errors in the drawings or specifications, field changes, safety hazards encountered, instructions given and corrective actions taken, delays encountered and a record of visitors to the work site.

1.06 NOTIFICATION ON NON-COMPLIANCE

A. The Owner will notify the Contractor of any detected non-compliance with the foregoing requirements. The Contractor shall take immediate corrective action after receipt of such notice. Such notice, when delivered to the Contractor at the work site, shall be deemed sufficient for the purpose of notification. If the Contractor fails or refuses to comply promptly, the Owner may issue an order stopping all or part of the work until satisfactory corrective action has been taken. No part of the time lost due to such stop orders shall be made the subject of claim for extension of time for excess costs or damages by the Contractor.

PART 2.0 - PRODUCTS

Not used.

PART 3.0 - EXECUTION

Not used.

END OF SECTION 01450

PART 1.0 - GENERAL

1.01 REFERENCES

The publications listed below form a part of this specification to the extent referenced. The publications are referred to in the text by the basic designation only.

A. CODE OF FEDERAL REGULATIONS (CFR)

29 CFR 1910	Occupational Safety and Health Standards
40 CFR 261	Identification and Listing of Hazardous Waste
40 CFR 262	Generators of Hazardous Waste
40 CFR 263	Transporters of Hazardous Waste
40 CFR 264	Owners and Operators of Hazardous Waste Treatment, Storage, and Disposal Facilities
40 CFR 265	Interim Status Standard for Owners and Operators of Hazardous Waste Treatment, Storage, and Disposal Facilities
40 CFR 300	National Oil and Hazardous Substances Pollution Contingency Plan
49 CFR 171	General Information, Regulations, and Definitions
49 CFR 172	Hazardous Materials, Tables, and Hazardous Materials Communications Regulations
49 CFR 178	Shipping Container Specification

B. ENVIRONMENTAL PROTECTION AGENCY (EPA)

EPA 832-R-92-005	Storm Water Management for Construction Activities

1.02 CONTRACTOR LIABILITIES FOR ENVIRONMENTAL PROTECTION

Contractors shall complete and provide environmental training documentation for training required by Federal, State, and local regulations.

1.03 DEFINITIONS

A. Sediment
Soil and other debris that has eroded and been transported by runoff water or wind.

B. Solid Waste
Rubbish, debris, garbage, and other discarded solid materials, except hazardous waste as defined in paragraph entitled "Hazardous Waste," resulting from industrial, commercial, and agricultural operations and from community activities.

C. Sanitary Wastes
Wastes characterized as domestic sanitary sewage.

D. Rubbish
Combustible and noncombustible wastes such as paper, boxes, glass, crockery, metal, lumber, cans, and bones.

E. Debris

Combustible and noncombustible wastes such as ashes and waste materials resulting from construction or maintenance and repair work, leaves, and tree trimmings.

F. Chemical Wastes
This includes salts, acids, alkalies, herbicides, pesticides, and organic chemicals.

G. Garbage
Refuse and scraps resulting from preparation, cooking, dispensing, and consumption of food.

H. Hazardous Waste
Hazardous substances as defined in 40 CFR 261 or as defined by applicable State and local regulations.

I. Hazardous Materials
Hazardous materials as defined in 49 CFR 171 and listed in 49 CFR 172.

J. Landscape Features
Trees, plants, shrubs, and ground cover.

K. Oily Waste
Petroleum products and bituminous materials.

1.04 SUBMITTALS

Submit the following in accordance with Section entitled "Submittal Procedures."

A. Pre-construction survey report.

B. Submit a copy of an approved laboratory analysis of materials collected as a result from abrasive blasting operations before disposing of waste materials.

C. Submit copies of any State and local permits or licenses for the solid waste disposal facility.

D. Submit a copy of the applicable EPA and State permits, manifests, or licenses for transportation, treatment, storage, and disposal of hazardous waste by permitted facilities.

E. Submit one copy of the EPA or State permit license, or regulation for the transporter who will ship the hazardous waste to the permitted Treatment, Storage, and Disposal (TSD) facility.

F. Submit written certification that hazardous waste turned in for disposal was generated on the Owner’s property and is identified, packaged, and labeled in accordance with 40 CFR 261, 40 CFR 262, and 40 CFR 263.

1.05 ENVIRONMENTAL PROTECTION REGULATORY REQUIREMENTS

A. Provide and maintain, during the life of the contract, environmental protection as defined in this Section. Plan for and provide environmental protective measures to control pollution that develops during normal construction practice. Plan for and provide environmental protective measures required to correct conditions that develop during the construction of permanent or temporary environmental features associated with the project. Comply with Federal, State, and local regulations pertaining to the environment, including but not limited to water, air, solid waste, and noise pollution.

1.06 ENVIRONMENTAL PROTECTION PLAN

A. Contents of Environmental Protection Plan

1. Include any hazardous materials (HM) planned for use on the job. Submit a list (including quantities) of HM to be brought to the site and copies of the corresponding material safety data sheets (MSDS). Submit this list to the Owner. At project completion, remove any hazardous material brought onto the site. Account for the quantity of HM brought to the site, the quantity used or expended during the job, and the left over quantity which (1) may have additional useful life as a HM and shall be removed by the Contractor, or (2) may be a hazardous waste, which shall then be removed as specified herein.

2. The Environmental Protection Plan shall list and quantify any Hazardous Waste (HW) to be generated during the project.

3. Store HW near the point of generation up to a total quantity of 55 gallons of hazardous waste. Move any volume exceeding these quantities to a HW permitted area within 3 days. Properly label all hazardous waste to be stored in accordance with applicable regulations.
Contact Owner for conditions in the area of the project which may be subject to special environmental procedures. Include this information in the Pre-construction Survey. Describe in the Environmental Protection Plan any permits required prior to working the area, and contingency plans in case an unexpected environmental condition is discovered.

4. Obtain permits for handling HW, and deliver completed documents to Engineer for review. File the documents with the appropriate agency, and complete disposal with the approval of Owner. Deliver correspondence with the State concerning the environmental permits and completed permits to Owner.

B. Environmental Protection Plan Format
The Environmental Protection Plan shall conform to the following format:

1.07 ENVIRONMENTAL PROTECTION PLAN

A. Contractor Organization Address and Phone Numbers

1. Methods to be used to prevent soil erosion

2. Methods to be used to contain spills of oily waste or debris

3. Methods to be used to control dust

4. Methods to be used for solid waste disposal

5. Hazardous materials to be brought onto the site

6. MSDS package

7. Employee training documentation

8. HW storage plan

9. HW to be generated

10. Pre-construction survey results

11. Permitting requirements identified

B. Perform a pre-construction survey of the project site with the Engineer, and document existing environmental conditions in and adjacent to the site.

PART 2.0 - PRODUCTS

Not used.

PART 3.0 - EXECUTION

3.01 PROTECTION OF NATURAL RESOURCES

A. Preserve the natural resources within the project boundaries and outside the limits of work. Restore to an equivalent or improved condition upon completion of work. Confine construction activities to within the limits of the work indicated or specified. Conform to the national and state permitting requirements of the Clean Water Act.

B. Prevent oily or other hazardous substances from entering the ground, drainage areas, or local bodies of water. Surround all temporary fuel oil or petroleum storage tanks with a temporary earth berm of sufficient size and strength to contain the contents of the tanks in the event of leakage or spillage.

C. Prevent oily substances or other debris from entering the water. Provide a temporary protective floating boom system, complete with associated hardware and anchors, to prevent debris from escaping from the work area. The boom shall totally enclose any active work or storage area. Booms shall have a minimum of 6 inches of freeboard, 12 inches draft, 11 pounds per foot buoyancy and a fabric strength of 13,000 pounds.

D. Do not disturb fish and wildlife. Do not alter water flows or otherwise significantly disturb the native habitat adjacent to the project and critical to the survival of fish and wildlife, except as indicated or specified.

3.02 NOISE

A. Make the maximum use of low-noise emission products, as certified by the EPA. Blasting or use of explosives will not be permitted without written permission from the Owner, and then only during designated times. Confine pile-driving operations to the period between 7 a.m. and 4 p.m., Monday through Friday, exclusive of holidays, unless otherwise directed.

3.03 EROSION AND SEDIMENT CONTROL MEASURES

A. Burn-off of the ground cover is not permitted.

B. Temporary Protection of Erodible Soils
Use the following methods to prevent erosion and control sedimentation:

1. Mechanically retard and control the rate of runoff from the construction site. This includes construction of diversion ditches, benches, berms, and use of silt fences and straw bales to retard and divert runoff to protected drainage courses.

2. Provide temporary protection on sides and back slopes as soon as rough grading is completed or sufficient soil is exposed to require erosion protection. Protect slopes by accelerated growth of temporary vegetation, mulching, netting or other methods approved by the Engineer.

3. Other means outlined in contract documents.

3.04 CONTROL AND DISPOSAL OF SOLID WASTES

A. Pick up solid wastes on a daily basis, and place in covered containers that are regularly emptied. Do not prepare or cook food on the project site. Prevent contamination of the site or other areas when handling and disposing of wastes. At project completion, leave the areas clean. Dispose of solid waste generated at locations as directed.

B. Remove rubbish and debris from Owner property and dispose at a licensed disposal facility off-site.

C. Place garbage in approved containers, and move to a pickup point or disposal area, where directed.

3.05 CONTROL AND DISPOSAL OF HAZARDOUS WASTE

A. Handle generated hazardous waste in accordance with 40 CFR 262.

B. Dispose of hazardous waste in accordance with Federal, State, and local regulations, especially 40 CFR 263, 40 CFR 264, and 40 CFR 265. Removal of hazardous waste from project site shall not occur without prior notification and coordination with the Owner. Transport hazardous waste by a permitted, licensed, or registered hazardous waste transported to a TSD facility. Hazardous waste shall be properly identified, packaged, and labeled in accordance with 49 CFR 172. Provide completed manifest for hazardous waste disposed of off-site to the Engineer within 7 days of disposal. Hazardous waste shall not be brought onto the site.

C. Store hazardous waste in containers in accordance with 49 CFR 178. Identify hazardous waste in accordance with 40 CFR 261 and 40 CFR 262. Identify hazardous waste generated within the confines of the site by the site's EPA generator identification number.

D. Take precautions to prevent spills of oil and hazardous material. In the event of a spill, immediately notify the Owner. Spill response shall be in accordance with 40 CFR 300 and applicable State regulations.

E. Protect against spills and evaporation during fueling and lubrication of equipment and motor vehicles. Dispose of lubricants and excess oil in accordance with Federal, State, local regulations per 3.05B.

3.06 DUST CONTROL

A. Keep dust down at all times, including nonworking periods. Sprinkle or treat, with dust suppressants, the soil at the site, haul roads, and other areas disturbed by operations. Dry power brooming will not be permitted. Instead, use vacuuming, wet mopping, wet sweeping, or wet power brooming. Air blowing will be permitted only for cleaning non-particulate debris such as steel reinforcing bars. Only wet cutting will be permitted for cutting concrete blocks, concrete, and bituminous concrete. Do not shake bags of cement, concrete mortar, or plaster unnecessarily.

B. Abrasive Blasting

1. The use of high pressure water blasting, in accordance with Society for Protective Coatings (SSPC) guidelines, in lieu of abrasive blasting is preferred method of substrate cleaning.
2. The use of silica sand is prohibited in abrasive blasting.
3. Provide tarpaulin drop cloths and windscreens to enclose abrasive blasting operations to confine and collect dust, abrasive agent, paint chips, and other. Perform work involving removal of hazardous material in accordance with 29 CFR 1910.
4. Collect dust, abrasive, paint, and other debris resulting from abrasive blasting operations on painted surfaces and store in 55 gallon drums with watertight lids. Take a representative sample of this material, and test for EP toxicity with respect to lead, chromium, and cadmium content. The sampling and testing shall be performed in accordance with 40 CFR 261. Handle debris resulting from the abrasive blasting operations as a hazardous material, and dispose of in accordance with 40 CFR 262, 40 CFR 263, 40 CFR 264, and 40 CFR 265. Transport hazardous material by a transporter licensed and permitted for transportation of hazardous materials. Dispose of hazardous material in an EPA-approved and permitted facility specifically designated for hazardous waste disposal.

END OF SECTION 01575

PART 1.0 - GENERAL

1.01 RELATED DOCUMENTS

A. Drawings and general provisions of Contract, including General and Supplementary Conditions and Division-1 Specification sections, apply to work specified in this section.

1.02 SUMMARY

A. This Section includes general procedural requirements governing execution of the Work including, but not limited to, the following:

1. Construction Layout.
2. Field engineering and surveying.
3. General installation of products.
4. Progress cleaning.
5. Starting and adjusting.
6. Protection of installed construction.
7. Correction of the Work.

B. Related Sections include the following:

1. Division 1, Section “Project Management and Coordination” for procedures to coordinate field engineering with other construction activities.
2. Division 1, Section “Submittal Procedures” for submitting surveys.
3. Division 1, Section “Closeout Procedures” for submitting final property survey with Project Record Documents, recording of Owner-accepted deviations from indicated lines and levels, and final cleaning.

1.03 SUBMITTALS

A. Qualification Data: For land surveyor to demonstrate their capabilities and experience. Include lists of completed projects with project names and addresses, names and addresses of architects and owners, and other information specified.

B. Certificates: Submit certificate signed by land surveyor certifying that locations and elevation of improvements comply with requirements.

C. Landfill Receipts: Submit copy of all receipts issued by a landfill facility, licensed to accept hazardous materials, for hazardous waste disposal.

D. Certified Surveys: Submit 5 copies signed by land surveyor.

E. Final Property Survey: Submit 10 copies showing the Work performed and record survey data.

1.04 QUALITY ASSURANCE

A. Land Surveyor Qualifications: A professional land surveyor who is legally qualified to practice in jurisdiction where Project is located and who has minimum of 5 years experience in providing land- surveying services of the kind indicated.

PART 2.0 - PRODUCTS

Not Used.

PART 3.0 - EXECUTION

3.01 IDENTIFICATION

A. Verify layout information shown on the Drawings, in relation to the property survey and existing benchmarks, before proceeding to lay out the Work. Locate and protect existing benchmarks and control points. Preserve permanent reference points during construction.

1. Do not change or relocate benchmarks or control points without prior written approval. Promptly report lost or destroyed reference points or requirements to relocate reference points due to necessary changes in grades or locations.

2. Promptly replace lost or destroyed Project control points. Base replacements on the original survey control points.

B. Establish and maintain a minimum of 2 permanent benchmarks on the site (if required to lay out work shown on contract drawings); referenced to data established by survey control points.

C. Establish and maintain the Layout Baseline with the stationing indicated on the Contract Drawings.

3.02 EXAMINATION

Existing Conditions: The existence and location of previously installed site improvements, utilities, and other construction indicated as existing are not guaranteed. Before beginning work, investigate and verify the existence and location of all site utility systems and other construction affecting the Work.

A. Before construction, verify the location and connection points of utility services.

B. Existing Utilities: The existence and location of underground and other utilities and construction indicated as existing are not guaranteed. Before beginning site work, investigate and verify the existence and location of all underground utilities and other construction affecting the Work.

1. Before construction, verify the location and invert elevation at connection points of sanitary sewer, storm sewer, gas, telecom, water-service piping, irrigation, and underground electrical services.

2. Furnish location data for work related to Project that must be performed by public utilities serving Project site.

3.03 PREPARATION

A. Existing Utility Information: Furnish information to Owner’s Representative that is necessary to adjust, move, or relocate existing utility structures, utility poles, lines, services, or other utility appurtenances located in or affected by construction. Coordinate with authorities having jurisdiction.

B. Existing Utility Interruptions: Do not interrupt utilities services serving facilities occupied by Owner or others unless permitted under the following conditions and

then only after arranging to provide temporary utility services according to requirements indicated:

1. Notify the Owner's Representative not less than two (2) business days in advance of proposed utility interruptions.
2. Do not proceed with utility interruptions without Owner's Representative's written permission.

C. Field Measurements: Take field measurements as required to fit the Work properly. Recheck measurements before installing each product. Where portions of the Work are indicated to fit to other construction, verify dimensions of other construction by field measurements before fabrication. Coordinate fabrication schedule with construction progress to avoid delaying the Work.

D. Space Requirements: Verify space requirements and dimensions of items shown diagrammatically on Drawings.
Review of Contract Documents and Field Conditions: Immediately on discovery of the need for clarification of the Contract Documents, submit a request for information to the Owner's Representative. Include a detailed description of problem encountered, together with recommendations for changing the Contract Documents.

3.04 CONSTRUCTION LAYOUT

A. Verification: Before proceeding to lay out the Work, verify layout information shown on Contract Documents in relation to the property survey and existing benchmarks. If discrepancies are discovered, notify Owner's Representative immediately.

B. General: Engage a land surveyor to lay out the Work including but not limited to the following accepted surveying practices:

1. Establish benchmarks and control points to set lines and levels at each story of construction and elsewhere as needed to locate each element of Project.
2. Establish dimensions with tolerances indicated. Do not scale Drawings to obtain required dimensions.
3. Inform installers of lines and levels to which they must comply.
4. Ongoing checks of location, level, and plumb, of every major element as the Work progresses.
5. Notify Owner's Representative when deviations from required lines and levels exceed allowable tolerances whenever conditions are encountered.
6. Close site surveys with an error of closure less than or equal to the standard established by authorities having jurisdiction.

C. Site Improvements: Locate and lay out site improvements, including pavements, grading, fill and topsoil placement, utility slopes, and invert elevations.

D. Building Lines and Levels: Locate and lay out control lines and levels for structures, including those required for mechanical and electrical work. Transfer survey markings and elevations for use with control lines and levels. Level structures from two or more locations.

E. Record Log: Maintain a log of layout control work. Record deviations from required lines and levels. Include beginning and ending dates and times of surveys, weather conditions, name and duty of each survey party member, and types of instruments

and tapes used. Make the log available for reference by the Engineer throughout the project.

3.05 FIELD ENGINEERING

A. Identification: Contractor will identify existing benchmarks, control points, and property corners.

B. Reference Points: Locate existing permanent benchmarks, control points, and similar reference points before beginning the Work. Preserve and protect permanent benchmarks and control points during construction operations.

1. Do not change or relocate existing benchmarks or control points without prior written approval of the Owner's Representative. Report lost or destroyed permanent benchmarks or control points promptly. Report the need to relocate permanent benchmarks or control points to the Owner's Representative before proceeding.

2. Replace lost or destroyed permanent benchmarks or control points promptly. Base replacements on the original survey control points.

3. Any required re-calculation and layout plan for an offset baseline shall be provided by the Contractor at no additional cost to the Owner.

C. Benchmarks: Establish and maintain a minimum of two permanent benchmarks on Project site, referenced to data established by survey control points. Comply with authorities having jurisdiction for type and size of benchmark.

1. Record benchmark locations, with horizontal and vertical data, on Project Record Documents.

2. Where the actual location or elevation of layout points cannot be marked, provide temporary reference points sufficient to locate the Work.

3. Remove temporary reference points when no longer needed. Restore marked construction to its original condition.

3.06 INSTALLATION

A. General: Locate the Work and components of the Work accurately, in correct alignment and elevation, as indicated.

1. Make vertical work plumb and make horizontal work level.

2. Where space is limited, install components to maximize space available for maintenance and ease of removal for replacement.

B. Comply with manufacturer's written instructions and recommendations for installing products in applications indicated.

C. Install products at the time and under conditions that will ensure the best possible results. Maintain conditions required for product performance until Substantial Completion.

D. Conduct construction operations so no part of the Work is subjected to damaging operations or loading in excess of that expected during normal conditions of occupancy.

E. Tools and Equipment: Do not use tools or equipment that produce harmful noise levels.

F. Anchors and Fasteners: Provide anchors and fasteners as required to anchor each component securely in place, accurately located and aligned with other portions of the Work.

1. Mounting Heights: Where mounting heights are not indicated, mount components at heights directed by the Owner's Representative.

2. Allow for structure movement, including thermal expansion and contraction.

G. Joints: Make joints of uniform width. Where joint locations in exposed work are not indicated, arrange joints for the best visual effect. Fit exposed connections together to form hairline joints.

H. Hazardous Materials: Use products, cleaners, and installation materials that are not considered hazardous.

3.07 PROGRESS CLEANING

A. General: Clean Project site and work areas daily, including common areas. Coordinate progress cleaning for joint-use areas where more than one installer has worked. Enforce requirements strictly. Dispose of materials lawfully.

1. Comply with requirements of NFPA 241 for removal of combustible waste materials and debris.

2. Do not hold materials more than 7 days or manufacturer's standard during normal weather or 3 days if the temperature is expected to rise above 80ºF (27ºC).

3. Containerize hazardous and unsanitary waste materials separately from other waste. Mark containers appropriately and dispose of legally, according to regulations.

B. Site: Maintain Project site free of waste materials and debris and ensure that no materials enter the adjacent waterway.

C. Work Areas: Clean areas where work is in progress to the level of cleanliness necessary for proper execution of the Work.

1. Remove liquid spills promptly.

2. Where dust would impair proper execution of the Work, broom-clean or vacuum the entire work area, as appropriate.

D. Installed Work: Keep installed work clean. Clean installed surfaces according to written instructions of manufacturer or fabricator of product installed, using only cleaning materials specifically recommended. If specific cleaning materials are not recommended, use cleaning materials that are not hazardous to health or property and that will not damage exposed areas.

E. Concealed Spaces: Remove debris from concealed spaces before enclosing the space.

F. Exposed Surfaces: Clean exposed surfaces and protect as necessary to ensure freedom from damage and deterioration at time of Substantial Completion.

G. Cutting and Patching: Clean areas and spaces where cutting and patching are performed. Completely remove paint, mortar, oils, putty, and similar materials.

1. Thoroughly clean piping, conduit, and similar features before applying paint or other finishing materials. Restore damaged pipe covering to its original condition.

H. Waste Disposal: Burying or burning waste materials on-site will not be permitted. Washing waste materials down sewers or into waterways will not be permitted.

I. During handling and installation, clean and protect construction in progress and adjoining materials already in place. Apply protective covering where required to ensure protection from damage, adverse weather conditions or deterioration at Substantial Completion.

J. Clean and provide maintenance on completed construction as frequently as necessary through the remainder of the construction period. Adjust and lubricate operable components to ensure operability without damaging effects.

K. Limiting Exposures: Supervise construction operations to ensure that no part of the construction, completed or in progress, is subject to harmful, dangerous, damaging, or otherwise deleterious exposure during the construction period.

3.08 STARTING AND ADJUSTING

A. Start equipment and operating components to confirm proper operation. Remove malfunctioning units, replace with new units, and retest.

B. Adjust operating components for proper operation without binding. Adjust equipment for proper operation.

C. Test each piece of equipment to verify proper operation. Test and adjust controls and safeties. Replace damaged and malfunctioning controls and equipment.

D. Manufacturer’s Field Service: If a factory-authorized service representative is required to inspect field-assembled components and equipment installation, comply with qualification requirements in Division 1, Section “Quality Control”.

3.09 PROTECTION OF INSTALLED CONSTRUCTION

A. Provide final protection and maintain conditions that ensure installed Work is without damage or deterioration at time of Substantial Completion.

B. Comply with manufacturer’s written instructions for temperature and relative humidity.

3.10 CORRECTION OF THE WORK

A. Repair or remove, and replace defective construction. Restore damaged substrates and finishes. Comply with requirements of original construction or installation of Work.

1. Repairing includes replacing defective parts, refinishing damaged surfaces, touching up with matching materials, and properly adjusting operating equipment.

B. Restore permanent facilities used during construction to their specified condition.

C. Remove and replace damaged surfaces that are exposed to view if surfaces cannot be repaired without visible evidence of repair.

D. Repair components that do not operate properly. Remove and replace operating components that cannot be repaired.

E. Remove and replace chipped, scratched, and broken materials.

END OF SECTION 01700

PART 1.0 - GENERAL

1.01 DESCRIPTION

A. Throughout the construction period, maintain the worksites in a standard of cleanliness as described in this Section.

B. In addition to standards described in this Section, comply with all requirements for cleaning as described in various other Sections of these Specifications.

C. Maintain premises and public properties free from accumulations of waste, debris, and rubbish caused by operations.

D. At completion of Work, remove and lawfully dispose of waste materials, rubbish, tools, equipment, machinery, and surplus materials, and clean all sight-exposed surfaces; leave project clean and ready for occupancy.

1.02 QUALITY ASSURANCE

A. Conduct daily inspections, and more often if necessary, to verify that requirements of cleanliness are being met.

B. In addition to the standards described in this Section, comply with all pertinent requirements of governmental agencies having jurisdiction.

1.03 SAFETY REQUIREMENTS

A. Hazards Control

1. Store volatile wastes in covered metal containers, and remove from premises daily.

2. Prevent accumulation of wastes that create hazardous conditions.

3. Provide adequate ventilation during use of volatile or noxious substances.

B. Conduct cleaning and disposal operations to comply with all applicable ordinances and anti- pollution laws.

PART 2.0 - PRODUCTS

Provide all required personnel, equipment, and materials needed to maintain the specified standard of cleanliness.

Use cleaning materials only on surfaces recommended by cleaning material manufacturer.

PART 3.0 - EXECUTION

3.01 PROGRESS CLEANING

A. General

1. Retain all stored items in an orderly arrangement allowing maximum access, not impeding drainage or traffic, and providing the required protection of materials.

2. Do not allow the accumulation of scrap, debris, waste material, and other items not required for construction of this Work.

3. Wet down dry materials and rubbish to lay dust and prevent blowing dust.

4. At least once a week and more often if necessary, completely remove all scrap, debris and waste material from the job site.

5. Provide adequate storage for all items awaiting removal from the job site, observing all requirements for fire protection and protection of the environment.

6. Combustible waste, scrap, rubbish, etc., shall be stored in adequately sized metal containers (with metal covers) where practical, pending removal from the premises.

B. Worksites

1. Daily, and more often if necessary, inspect each site and move all scrap, debris and waste material to a place designated for their storage.

2. Weekly, and more often if necessary, inspect all arrangements of materials stored on each site; restack, tidy, or otherwise service all arrangements to meet the above requirements.

3. Maintain each site in a neat and orderly condition at all times.

C. Structures

1. Weekly, and more often if necessary, inspect the new structures and move all scrap, debris, and waste material to designated storage area.

2. As required preparatory to installation of succeeding materials, clean the structures or pertinent portions thereof to the degree of cleanliness recommended by the manufacturer of materials required to achieve the required cleanliness.

3. Handle materials in a controlled manner. Do not drop or throw materials from heights.

4. Schedule cleaning operations so that dust and other contaminants resulting from cleaning process will not fall on wet, newly finished surfaces.

3.02 FINAL CLEANING

A. Prior to completion of the work, remove from the job site all tools, surplus materials, equipment, scrap, debris and waste.

B. Employ experienced workmen, or professional cleaners, for final cleaning.

C. In preparation for substantial completion or occupancy, conduct a final inspection of sight- exposed exterior surfaces, and of any concealed spaces.

D. Structures

1. Visually inspect all surfaces and remove all traces of soil, waste material, smudges and other foreign matter. Remove all traces of splashed materials from adjacent surfaces. Remove all paint droppings, spots, stains, and dirt from finished surfaces. Use only the specified cleaning materials and equipment.

2. Besides the general broom cleaning, the Contractor shall do the following special cleaning for all trades at the completion of the work and before final acceptance:

   a. Remove all marks, stains, and other soil or dirt from all newly finished surfaces.

   b. Remove all stains and clean exposed concrete floors.

   c. Clean and polish all hardware for all trades; this shall include removal of all stains, dust, dirt, paint, etc., upon completion.

   d. Clean all new fixtures and equipment installed as part of this Contract, removing all stains, paint, dirt and dust.

   e. Repair and patch marred surfaces to specified finish to match adjacent surfaces.

E. Final Cleaning: Schedule final cleaning as approved by the Engineer to enable the Owner to accept a completely clean project.

END OF SECTION 01710

PART 1.0 - GENERAL

1.01 RELATED DOCUMENTS

A. Drawings and general provisions of Contract, including General and Supplementary Conditions and Division-1 Specification sections, apply to work specified in this section.

1.02 SUMMARY

A. This Section includes administrative and procedural requirements for contract closeout, including, but not limited to, the following:

1. Inspection procedures.
2. Project Record Documents.
3. Operation and Maintenance manuals.
4. Warranties.
5. Instruction of Owner's personnel.
6. SD-09 Closeout Submittals.
7. Final cleaning.

B. Related Sections include the following:

1. Division 1, Section "Construction Progress Documentation" for submitting final documentation.
2. Division 1, Section "Execution Requirements" for progress cleaning of Project site.
3. Divisions 2 through 16, Sections for specific closeout and special cleaning requirements for products of those Sections.

1.03 SUBSTANTIAL COMPLETION

A. Preliminary Procedures: Before requesting inspections for determining date of Substantial Completion, complete the following (List items below that are incomplete in request):

1. Prepare a list of items to be completed and corrected (punch list), the value of items on the list, and reasons why the Work is not complete.
2. Advise Owner of pending insurance changeover requirements.
3. Submit specific warranties, workmanship bonds, maintenance service agreements, final certifications, and similar documents.
4. Obtain and submit releases permitting Owner unrestricted use of the Work and access to the services and utilities. Include occupancy permits, operating certificates, and similar releases.
5. Prepare and submit Project Record Documents, operation and maintenance manuals, final property surveys, and similar final record information.

6. Deliver tools, spare parts, extra materials, and similar items to location designated by Owner. Label with manufacturer's name and model number where applicable.
7. Make final changeover of permanent locks and deliver keys to Owner. Advise Owner's personnel of changeover in security provisions.
8. Complete startup testing of systems.
9. Submit test/adjust/balance records.
10. Terminate and remove temporary facilities from Project site, along with mockups, construction tools, and similar elements.
11. Advise Owner of changeover in all utilities.
12. Submit changeover information related to Owner's occupancy, use, operation, and maintenance.
13. Complete final cleaning requirements, including touchup painting.
14. Touchup and otherwise repair and restore marred exposed finishes to eliminate visual defects.

B. Inspection: Submit a written request for inspection for Substantial Completion. On receipt of request, Engineer and/or Owner's Representative will either proceed with inspection or notify Contractor of unfilled requirements. The Owner's Representative will prepare the Certificate of Substantial Completion after inspection or will notify Contractor of items, either on Contractor's list or additional items identified by the Owner's Representative that must be completed or corrected before certificate will be issued.

1. Re-inspection: Request re-inspection when the Work identified in previous inspections as incomplete is completed or corrected.
2. Results of completed inspection will form the basis of requirements for Final Completion.

1.04 FINAL COMPLETION

A. Preliminary Procedures: Before requesting final inspection for determining date of Final Completion, complete the following:

1. Submit a final Application for Payment according to payment procedure.
2. Submit certified copy of Owner's Representative's endorsed and dated Substantial Completion inspection list of items to be completed or corrected (punch list). The certified copy of the list shall state that each item has been completed or otherwise resolved for acceptance.
3. Submit evidence of final, continuing insurance coverage complying with insurance requirements.
4. Submit pest-control final inspection report and warranty.
5. Instruct Owner's personnel in operation, adjustment, and maintenance of products, equipment, and systems. Submit demonstration and training videotapes.

B. Inspection: Submit a written request for final inspection for acceptance. On receipt of request, Engineer and/or Owner's Representative will either proceed with inspection or notify Contractor of unfilled requirements. The Owner's Representative will prepare a final Certificate for Payment after inspection or will notify Contractor of construction that must be completed or corrected before certificate will be issued.

1. Re-inspection: Request re-inspection when the Work identified in previous inspections as incomplete is completed or corrected.

1.05 LIST OF INCOMPLETE ITEMS (PUNCH LIST)

A. Preparation: Submit three (3) copies of list. Include name and identification of each space and area affected by construction operations for incomplete items and items needing correction including, if necessary, areas disturbed by Contractor that are outside the limits of construction. Use CSI Form 14.1A.

1. Organize list of areas in phases to match construction schedule, starting with the northern areas first and proceeding south.

2. Organize items applying to each phase of work by major element, including categories for earthwork, utility systems, paving, structures, irrigation, water supply, lighting, planting soils and mixes, and site furnishings.

3. Include the following information at the top of each page:

a. Project Name.

b. Date.

c. Name of Engineer and Owner's Representative.

d. Name of Contractor.

e. Page number.

1.06 WARRANTIES

A. Submittal Time: Submit written warranties on request of Owner's Representative for designated portions of the Work where commencement of warranties other than date of Substantial Completion is indicated.

B. Partial Occupancy: Submit properly executed warranties within 15 days of completion of designated portions of the Work that are completed and occupied or used by Owner during construction period by separate agreement with Contractor.

C. Organize warranty documents into an orderly sequence based on the table of contents of the Project Manual.

1. Bind warranties and bonds in heavy-duty, 3-ring, vinyl-covered, loose-leaf binders, thickness as necessary to accommodate contents, and sized to receive 8-½" x 11" paper.

2. Provide heavy paper dividers with plastic-covered tabs for each separate warranty. Mark tab to identify the product or installation. Provide a typed description of the product or installation, including the name of the product and the name, address, and telephone number of Installer.

3. Identify each binder on the front and spine with the typed or printed title "WARRANTIES", Project name, and name of Contractor.

D. Provide additional copies of each warranty to include in operation and maintenance manuals.

PART 2.0 - PRODUCTS

2.01 MATERIALS

A. Cleaning Agents: Use cleaning materials and agents recommended by manufacturer or fabricator of the surface to be cleaned. Do not use cleaning agents that are potentially hazardous to health or property or that might damage finished surfaces.

PART 3.0 - EXECUTION

3.01 FINAL CLEANING

A. General: Provide final cleaning. Conduct cleaning and waste-removal operations to comply with local laws and ordinances, and Federal and local environmental and anti-pollution regulations.

B. Cleaning: Employ experienced workers or professional cleaners for final cleaning. Clean each surface or unit to condition expected in an average commercial cleaning and maintenance program. Comply with manufacturer's written instructions.

1. Complete the following cleaning operations before requesting inspection for certification of Substantial Completion for entire Project or for a portion of Project:

a. Clean Project site, yard, and grounds, in areas disturbed by construction activities, including landscape development areas, of rubbish, waste material, litter, and other foreign substances.

b. Sweep paved areas broom clean. Remove petrochemical spills, stains, and other foreign deposits.

c. Rake grounds that are neither planted nor paved to a smooth, even-textured surface.

d. Remove tools, construction equipment, machinery, and surplus material from Project site.

e. Remove snow and ice to provide safe access along walkways.

f. Clean exposed hard-surfaced finishes to a dirt-free condition, free of stains, films, and similar foreign substances. Avoid disturbing natural weathering of exterior surfaces.

g. Remove debris from limited access spaces, including trenches, equipment vaults, manholes, and similar spaces.

h. Remove labels that are not permanent.

i. Touch up and otherwise repair and restore marred, exposed finishes and surfaces. Replace finishes and surfaces that cannot be satisfactorily repaired or restored or that already show evidence of repair or restoration.

(i) Do not paint over "UL" and similar labels, including mechanical and electrical nameplates.

j. Wipe surfaces of mechanical and electrical equipment and similar equipment. Remove excess lubrication, paint and mortar droppings, and other foreign substances.

k. Replace parts subject to unusual operating conditions.

l. Clean light fixtures, lamps, globes, and reflectors to function with full efficiency. Replace burned-out bulbs, and those noticeably dimmed by hours of use, and defective fixtures.

m. Leave Project clean and ready for occupancy.

C. Pest Control: Engage an experienced, licensed exterminator to make a final inspection and rid Project of rodents, insects, and other pests. Prepare a report.

D. Comply with safety standards for cleaning. Do not burn waste materials. Do not bury debris or excess materials on Owner's property. Do not discharge volatile, harmful, or dangerous materials into drainage systems or waterways. Remove waste materials from Project site and dispose of lawfully.

END OF SECTION 01770

PART 1.0 - GENERAL

1.01 SUMMARY OF WORK

A. Under the applicable Division-2 sections referred to herein, the Contractor shall provide all labor, materials, and equipment necessary to perform all site work that is indicated or covered by the Contract Documents.

B. Site work shall be shown on the site improvement plans, or as specified herein, or as directed by the Owner's Representative. Work shall include, but not be limited to, the following:

1. Earthwork
2. Shoring and Bracing Earthwork
3. Pile Remediation
4. Temporary Environmental Controls

C. The drawings and General Conditions of the Contract, including General and Supplementary Conditions, apply to work specified in the Division-2 sections indicated herein. The site improvement plans consisting of the following shall be referred to herein as the Site Plan.

1. Rockefeller Park Repair Plan, Sections, and Location Key
2. Esplanade Plaza Repair Plan, Sections, and Location Key
3. Wagner Park Repair Plan, Sections, and Location Key Sheet 1 of 2
4. Wagner Park Repair Plan, Sections, and Location Key Sheet 2 of 2

D. Site work shall be accomplished in accordance with all federal, state, and local requirements and regulations.

E. The Contractor shall provide continuous access to the site and shall coordinate work with all other contractors and subcontractors working on the site, on adjacent roadway systems, and adjacent properties. The Contractor shall not obstruct access to and from the adjacent properties from the adjacent roadways and driveways.

F. The Contractor shall provide a safe construction site at all times, and the public shall be protected from unreasonable hazards. Applicable federal, state, and local requirements shall be observed and necessary permits shall be acquired by the Contractor. The Contractor shall take immediate steps to rectify any hazardous or unsafe condition determined so by the Owner, Owner’s Representative, and agency having jurisdiction over the project site. The Contractor shall conform to the requirements of the municipal agency having jurisdiction; and Industrial Code Rule 23, Protection in Construction, Demolition and Excavation, Operations, of the Rules and Regulations of the State of New York and of Subsection 107-05 "Safety and Health Requirements" of the NYSDOT Standard Specifications.

G. Throughout the specifications contained herein, reference is made to the requirements of the City of New York and the requirements of the utility having jurisdiction (water, sewer, electric, gas, and telephone). When there is a conflict between the referenced specifications, requirements, details, and specifications contained herein, the more stringent requirements shall control, as determined by

the Owner's Representative or representative of agency having jurisdiction, as appropriate, shall be final.

H. The Contractor shall obtain and observe the applicable sections of the following specifications, details and the Contract Documents. In utilizing referenced Standard Details and Specifications, the Contractor shall conform to requirements governing the work, materials, or project and not the general provisions and other provisions relating to measurement and payment. Standard Specifications, Details, Codes, Requirements, etc., specified herein by reference shall be as binding as if copied verbatim and specified directly herein.

1. The specifications, details, and requirements of the City of New York.
2. "Standard Specifications Construction and Materials, and Details", of the New York State Department of Transportation.
3. Title 29 Code of Federal Regulations, Part 1926, Safety and Health Regulations for Construction, (OSHA).
4. Industrial Code Rules of the New York State Department of Labor, Board of Standards and Appeals.

I. Minimum Standard Reminder: Codes and Standard Specifications listed are minimum standards, and will not relieve the Contractor from carrying out all site work operations in a safe and prudent manner, or from providing a higher quality of material and workmanship. The workforce, the public, and adjacent property shall be protected from unreasonable hazard, and, the work shall be satisfactorily completed without causing damage to adjacent ground and structures.

J. Conformance to the requirements herein does not relieve the Contractor from implementing additional measures or providing additional materials, work, equipment, personnel, etc., necessary to ensure a safe construction site and protection of existing facilities. The Contractor is placed on notice that safety during construction is considered as important as the construction itself. The Contractor shall, therefore, at all times conduct his operations in a manner to ensure that conditions on the site are adequate and effective for safety; and, to insure the convenience of abutting property, Owners and their safety as well as the safety of his own employees.

K. Emergency Contact Person: The Contractor shall designate someone to be available to respond to emergency calls. The name of the person and the telephone number at which he/she can be reached at any time shall be given to the Consultant, Owner and all police agencies in the area. Such person shall have full authority and capability to mobilize forces promptly as required to respond to an emergency and protect the public.

L. The work barges must be moored independently of the pier structures either by mooring piles (spuds) or anchors which must conform to USCG requirements.

1.02 PERMITS AND BONDS

A. Purchase and submit copies of permits and bonds necessary in connection with the performance of the Work specified in contract documents. At the job site, post notices and copies of permits necessary for the proper and lawful performance of the work, in accordance with such permits.

END OF SECTION 02100

PART 1.0 - GENERAL

1.01 DESCRIPTION

A. Work of this Section includes all labor, materials, equipment, and services necessary to complete the temporary erosion control measures as shown on the Drawings or as ordered by the Engineer and/or Construction Manager or Engineer during the life of the Contract. The Contractor shall provide and maintain temporary vegetation of all areas disturbed by construction.

B. Vegetative Measures

1. Topsoil
2. Mulching

C. Temporary Structural Measures

1. Earth Dike
2. Temporary Swale
3. Perimeter Dike/Swale
4. Temporary Storm Drain Diversion
5. Pipe Slope Drain
6. Straw Bale Dike
7. Silt Fence
8. Storm Drain Inlet Protection
9. Sediment Trap
10. Portable Sediment Tank
11. Sediment Basin
12. Stabilized Construction Entrance
13. Construction Road Stabilization
14. Dust Control
15. Sump Pit

1.02 RELATED WORK

A.	Temporary Environmental Controls	Section 01575
B.	Cleaning	Section 01710
C.	Site Work General Provisions	Section 02100
D.	Epoxy Mortar and Cementitious Grout Pile Jacketing	Section 03310

1.03 QUALITY ASSURANCE

A. The Contractor shall perform all operations in accordance with the rules, regulations and ordinances of those governing bodies having jurisdiction including but not limited to all federal, state, and local regulations.

B. NYSDEC General Permit

1. The project will be subject to the New York State Department of Environmental Conservation (NYSDEC) SPDES General Permit for Stormwater Discharges from Construction Activity, Permit No. GP-02-01. The Owner will file a Notice of Intent (NOI) with the NYSDEC in accordance with the General Permit.

2. A Storm Water Pollution Prevention Plan has been prepared in accordance with the SPDES General Permit. The SWPPP is a part of the Contract Documents and the Contractor shall conform to the SWPPP's chapter on Soil Erosion and Sediment Control in addition to the requirements of this Specification section.

3. The Contractor and all Subcontractors will be responsible for implementing all sediment control measures during construction. All contractors and subcontractors that will be performing excavations on the site must sign a copy of the SWPPP certification statement, outlined below, before undertaking any construction or activity at the site. The certification must include the name and title of the person providing the signature; the name, address and telephone number of the contracting firm; the address (or other identifying description) of the site; and the date the certification was made.

Certification Statement:

"I certify under penalty of law that I understand and agree to comply with the terms and conditions of the Storm Water Pollution Prevention Plan (SWPPP) for the construction site identified in such SWPPP as a condition of authorization to discharge stormwater. I also understand that the operator must comply with the terms and conditions of the New York State Pollutant Discharge Elimination System ("SPDES") general permit for stormwater discharges from construction activities and that it is unlawful for any person to cause or contribute to a violation of water quality standards."

4. In the event of conflict between the requirements of these Project Specifications and the pollution control laws, rules or regulations of Federal, State, and Local agencies, the more restrictive laws, rules or regulations shall govern.

5. In accordance with the NYSDEC General Permit, the project is limited to a maximum disturbed area of 5.0 acres. The Contractor may alter the construction sequence only with prior approval by the Engineer. Areas covered with gravel, building sub-base material or temporary emulsion or stabilization shall be considered as stabilized.

6. Temporary stabilization must be maintained at all times. The Contractor is responsible for maintaining records to insure the 5 acre disturbance limit is met.

7. Providing and maintaining all temporary stabilization to meet the NYSDEC requirements shall be included in the Contract price. The Contractor shall maintain throughout the entire construction contract.

1.04 SUBMITTALS

A. Submit shop drawings in accordance with Section 01330-Submittals.

B. Manufacturers specifications and other data required to demonstrate compliance with specific requirements of this Section.

1.05 JOB CONDITIONS

A. The Contractor shall provide all necessary safeguards as may be required to prevent damage to property beyond the Work area or adjacent property.

B. Area of Work

1. In accordance with the NYSDEC General Permit, the project is limited to a maximum disturbed area of 5.0 acres. The Contractor may alter the construction sequence only with prior approval by the Owner or Owner's Representative. Areas covered with gravel, building sub-base material or temporary emulsion or stabilization shall be considered as stabilized.

2. The Construction Manager or Engineer shall have the authority to increase or decrease the surface area of erodible earth material exposed by clearing and grubbing, and/or excavation and fill operations, and to direct the Contractor to provide immediate permanent or temporary pollution control measures to prevent contamination of adjacent streams or other watercourses, lakes, ponds or other areas of water impoundment.

C. Temporary Erosion Control Measures

1. Temporary erosion control measures shall be used to correct conditions that develop during construction that are needed prior to installation of permanent control features, or that are temporarily needed to control erosion that develops during normal construction practices, but which are not associated with permanent control features on the Project. All slopes and stockpile areas that will remain undisturbed and/or not top-soiled and seeded for a period of fourteen (14) calendar days shall be temporarily seeded.

D. Permanent Erosion Control Measures

1. The Contractor shall incorporate all permanent erosion control features into the Project at the earliest practical time as outlined in the Project Schedule.

PART 2.0 - PRODUCTS

2.01 GENERAL

A. All materials shall be in accordance with the items specified on the Drawings and/or contained in the "New York Guidelines for Urban Erosion and Sediment Control", August 2005.

2.02 SILT FENCE

A. Fence post shall be at least 36 inches long. Wood posts shall be of hardwood with a minimum cross section area of 4 inches. Steel posts shall be standard "T" or "U" sections and should weigh no less than one (1) pound per linear foot.

B. Additional support shall be provided by a woven wire fence. Woven wire fence shall be at least 14-gauge with 2" x 4" openings. Plastic netting may be used in lieu of

woven wire fence. The plastic netting shall be sewn on top of the geotextile filter fabric. Plastic netting shall have the following minimum properties.

Netting Property	Minimum Acceptable Value
Tensile Strength (lbs/ft)	185
Elongation (%)	11

C. The geotextile filter fabric shall have the following minimum material properties.

Geotextile Property	Minimum Acceptable Value	Test Method
Grab Tensile Strength (lbs)	90	ASTM D1682
Elongation at Failure (%)	50	ASTM D1682
Mullen Burst Strength (psi)	190	ASTM D3786
Puncture Strength (lbs)	40	ASTM D751(mod)
Slurry Flow Rate (gal/min/sf)	0.3	
Apparent Opening Size (AOS)	40-80	US Std Sieve CW-02215
Ultraviolet Radiation Stability	90	ASTM G26

2.03 STABILIZED CONSTRUCTION ENTRANCE

A. The geotextile filter fabric shall have the following minimum material properties.

Geotextile Property	Minimum Acceptable Value	Test Method
Grab Tensile Strength (lbs)	200	ASTM D1682
Elongation at Failure (%)	50	ASTM D1682
Mullen Burst Strength (psi)	190	ASTM D3786
Puncture Strength (lbs)	40	ASTM D751(mod)
Apparent Opening Size (AOS)	40-80	US Std Sieve CW-02215

B. Stone size shall be a minimum of two (2) inches conforming to AASHTO M-43, Size no. 1.

2.04 DUST CONTROL

A. Spray adhesives for use on mineral soils shall be as specified in the Table below.

Material	Water Dilution	Type of Nozzle	Apply Gallons/Acre
Acrylic Polymer	7:1	Course Spray	500
Latex Emulsion	12.5:1	Fine Spray	235
Resin in Water	4:1	Fine Spray	300
Polyacrylamide (PAM) Spray on or Dry Spread	Apply according to manufacturer's instructions.		
Acidulated soy bean soap stick	None	Course Spray	1200

B. Tillage- to roughen surface and bring clods to the surface. This is a temporary emergency measure which should be used before soil blowing starts. Begin plowing

on windward side of site. Chisel-type plows spaced about 12 inches apart, and spring-toothed harrows are examples of equipment which may produce the desired effect.

C. Sprinkling - site is sprinkled until the surface is wet.

D. Barriers - solid board fences, snow fences, burlap fences, crate walls, bales of hay, and similar material can be used to control air currents and soil blowing.

E. Calcium chloride- shall be in the form of loose, dry granules or flakes fine enough to feed through commonly used spreaders at a rate that will keep surface moist but not cause pollution or plant damage. If used on steeper slopes, then use other practices to prevent washing into streams, or accumulation around plants.

F. Stone – shall be crushed stone or coarse gravel conforming to AASHTO M-43, Size no. 57.

2.05 MULCH

A. Mulch Materials

Material	Quality Standard	Application Rate per 1,000 s.f.	Depth of application
Small Grain Straw	Air dried; free of undesirable seeds and coarse material	90 to 100 lbs.	Cover about 90% of surface
Wood chips or Shavings	Green or air dried; free of objectionable coarse material	500 to 900 lbs	--
Jute Twisted Yarn	Undyed, unbleached plain weave. Warp 78 ends per yd. Weft 41 ends per yd. 60-90 lbs/roll	48” x 50 yards 48” x 75 yards	--
Gravel, crushed stone or slag	Washed: AASHTO M-43, Size no. 2. AASHTO M-43, Size no. 3.	9 cubic yards	Use Size no. 3 where subject to traffic

1. Alternate mulch materials as described in the “New York Guidelines for Urban Erosion and Sediment Control”, August 2005 may be utilized with prior written approval of the Engineer.

B. Mulch Anchoring

1. Mulch anchoring should be accomplished immediately after placement to minimize loss by wind or water. Anchoring may be done by one of the following methods, depending upon the size of the area, steepness of slopes, and costs.

2. Peg and Twine - Drive 8 to 10 inch wooden pegs to within 2 to 3 inches of the soil surface every 4 feet in all directions. Stakes may be driven before or after applying mulch. Secure mulch to soil surface by stretching twine between pegs in a criss- cross and a square pattern. Secure twine around each peg with two or more round turns.

3. Mulch Nettings - Staple the light weight paper, jute, cotton, or plastic nettings to the soil surface. Mulch netting shall be biodegradable.

4. Crimper (mulch anchoring tool) - A tractor-drawn implement, somewhat like a disc- harrow especially designed to push or cut some of the broadcast long fiber mulch 3 to 4 inches into the soil so as to anchor it and leave part standing upright. This technique is limited to areas traversable by a tractor, which must operate on the contour of slopes. Straw mulch rate must be 3 tons per acre. No tackifying or adhesive agent is required.

5. Liquid Mulch-Binders - May be used to anchor salt hay or straw mulches.

   a. Applications should be heavier at edges where wind catches the mulch, in valleys, and at crests or banks. Remainder of area should be uniform in appearance.

   b. Use one of the following:
      (i) Emulsified asphalt - (SS-l, CSS-l, CMS-2, MS-2, RS-l, RS-2, CRS-l, and CRS-2). Apply 0.04 gallons per sq. yd. or 194 gallons per acre on flat slopes less than 8 feet high. On slopes 8 feet high or more use 0.075 gallons per sq. yd. or 363 gallons per acre.
      (ii) Cutback asphalt - rapid curing (RC-70, RC-250, and RC-800) or medium curing (MC-250 or MC-800). Apply 0.04 gallons per sq. yd. or 194 gallons per acre on flat areas and on slopes less than 8 feet high. On slopes 8 feet or more high, use 0.075 gallons per sq. yd. or 363 gallons per acre.
      (iii) Synthetic or Organic binders - binders such as Curasol, DCA-70, Petro-set and Terra-Tack, or equal, may be used at rates recommended by the manufacturer to anchor mulch materials.

PART 3.0 - EXECUTION

3.01 INSPECTION

A. The Owner will retain an engineer to conduct on-site inspections every 7 days and within 24 hours of 0.5 inches or greater of rainfall for general compliance with the SWPPP and the General Permit. Inspection reports will be provided to the Owner and Contractor within 24 hours of the field inspection. Any problem areas of areas in need of additional stabilization will require immediate attention and correction by the Contractor.

B. Examine the areas and conditions where Erosion Control Measures are to be installed and notify the Construction Manager or Engineer of conditions detrimental to the proper and timely completion of the Work. Do not proceed with the Work until unsatisfactory conditions have been corrected by the Contractor in a manner acceptable to the Construction Manager or Engineer.

3.02 GENERAL REQUIREMENTS

A. The Contractor shall conduct his operations to minimize erosion of soils and to prevent silting and muddying of streams, rivers, irrigation systems, impoundments (lakes, reservoirs, etc.) and lands adjacent to or affected by the Work, in accordance with the approved Sequence of Construction, Drawings, and these Project Specifications.

B. Construction of drainage facilities and performance of other Work that will contribute to the control of erosion and sedimentation shall be carried out in conjunction with earthwork operations or as soon thereafter as practical.

C. Where erosion is likely to be a problem, clearing and grubbing operations shall be scheduled so that grading operations and permanent erosion control features can follow immediately thereafter, if the Project conditions permit; otherwise, temporary erosion control measures may be required between successive construction stages. The area of bare soil exposed at any one time by construction operations shall be kept to a minimum.

D. Throughout all operations covered by this Section, the Contractor shall provide all necessary measures to control dust through the use of water, calcium chloride or other material in accordance with the approval of the Construction Manager or Engineer, at such locations and during such periods as he may direct, or as may be required by Local Ordinance or Authorities.

3.03 TEMPORARY EROSION CONTROL MEASURES

A. Temporary erosion control measures shall be used to correct conditions that develop during construction that are needed prior to installation of permanent control features, or that are temporarily needed to control erosion that develops during normal construction practices, but which are not associated with permanent control features on the Project.

B. The Contractor shall install all temporary sediment and erosion control measures in accordance with the Details and as described herein.

3.04 DUST CONTROL

A. Throughout all operations covered by this Section of the Project Specifications, the Contractor shall provide all necessary measures to control dust through the use of water, resin-in-water emulsion or other material in accordance with the approval of the Construction Manager or Engineer, at such locations and during such periods as he may direct, or as may be required by Local Ordinance or Authorities.

B. Any disturbed areas that are left exposed more than 14 days, and are not subject to construction traffic, will immediately receive a temporary seeding. If the season prevents the establishment of a temporary cover, the disturbed areas will be mulched with straw or equivalent material.

C. Application of spray-on adhesive (resin-in-water emulsion) shall be applied at a rate of 300 gallons per acre. The resin-in-water emulsion shall be diluted at a ratio of 4:1 and shall be applied with a fine spray nozzle. The treated soil shall not be used for travel.

D. Watering equipment shall consist of pipelines, tanks, tank trucks or other approved devices capable of applying a uniform spread of water over the surface. A suitable device for regulating the flow and positive shut-off of the water shall be provided for positive control by the operator.

E. The Owner’s Representative will advise the Contractor of any unsatisfactory procedures for dust control. If the unsatisfactory procedures are not corrected promptly, the Owner’s Representative may suspend the performance of any or all construction until the condition has been corrected.

3.05 TEMPORARY SEEDING

A. Fertilizer shall be applied at the rate of 14 lbs. per 1000 square foot or 600 lbs. per acre, using 5-10-10 or equivalent.

B. Annual ryegrass shall be applied at the rate of 30 lbs. per acre, or other select mixture described in the standards.

C. Small grain straw mulch shall be applied at a rate of 90 lbs. per 1000 square foot or 2 tons per acre, to be applied and anchored according to the standards.

D. All slopes and stockpile areas that will remain undisturbed and/or not topsoiled and seeded for a period of fourteen (14) days shall be temporarily seeded as specified on Drawings.

3.06 SEDIMENTS AND POLLUTANTS

A. Water from operations containing sediment shall be treated by filtration, settling basins or other approved means sufficient to reduce the sediment content to no more than that of the stream into which it is discharged.

B. Pollutants such as fuels, lubricants, bitumens, raw sewage and other harmful materials shall not be discharged into or near rivers, streams, and impoundments or into natural or manmade channels leading thereto. Wash water or waste from concrete mixing operations shall not be allowed to enter live streams.

3.07 PERMANENT EROSION CONTROL MEASURES

A. The Contractor shall incorporate permanent erosion control features into the Project at the earliest practical time as outlined in his accepted schedule.

B. No area shall receive permanent seeding prior to approval by the Owner’s Representative .

3.08 CONCRETE WASTE

A. Discharge of excess or waste concrete and/or wash water from Concrete Ready-Mix Trucks will be allowed on the construction site, but only in specifically designated diked areas that have been prepared to prevent contact between the concrete and/or wash water and storm water that will be discharged from the site or in locations where waste concrete can be placed into forms to make riprap or other useful concrete products. The cured residue from the concrete washout diked areas shall be disposed in accordance with applicable local, state, and federal regulations. The Contractor is responsible for assuring that these procedures are followed.

3.09 TEMPORARY FUEL TANKS

A. Temporary on-site fuel tanks for construction vehicles shall meet all state and federal regulations. Tanks shall have approved spill containment with the capacity required by the applicable regulations. The tank shall be in sound condition free of rust or other damage that might compromise containment. Hoses, valves, fittings, caps, filler nozzles, and associated hardware shall be maintained in proper working condition at all times.

END OF SECTION 02270

PART 1.0 - GENERAL CONDITIONS

1.01 SCOPE

The work covered by this document consists of furnishing all materials required and performing all operations required for pile repair/encapsulation using epoxy mortar or cementitious grout in conjunction with fiberglass jackets as formwork.

A. Contractor shall provide all labor, materials, tools, and equipment required for the completion of the following work, as shown on the contract documents and specified herein:

1. Prepare existing areas as defined by these specifications and associated contract drawings designated to receive epoxy mortar or cementitious grout encasements.
2. Furnish, transport, place, and install all epoxy mortar or cementitious grout.
3. Furnish, transport, place, and install all required reinforcing steel.
4. Design, furnish, fabricate, install and remove, when called for, all formwork shores and bracing.
5. Prepare, submit, and revise fabrication and placement shop drawings listed below.
6. Prepare design drawings and calculations for formwork, shores, and bracing as specified herein.
7. Furnish all submittals required by this Section of the Specifications.
8. Coordinate all work with other trades on site.

1.02 QUALITY ASSURANCE

A. The manufacturer shall have a minimum 10 year history in the manufacturing of their respective epoxy or cementitious grout systems. The manufacturer shall provide on-site technical service at no cost to the additional cost to the owner.

B. The Contractor shall be responsible for the quality of the pile encasement construction. Quality of placed material will be evaluated by the Engineer, based on conformance with the requirements of this Section.

C. The Contractor shall provide labor and means for obtaining all samples of concrete required for tests and for curing and protecting grout cubes samples at the construction site per the required sampling and testing standards.

1.03 SUBMITTALS

A. Comply with pertinent provisions of Section 01330 of these Specifications.

B. Details shall be carried out in accordance with the New York City Building Code, and where no requirements are set forth in the Code, with the Standard ACI requirements, and as shown on plans.

C. Product Data provided on submittals shall include bot not be limited to:

1. Description of each epoxy and cementitious grout material.
2. Sieve and quality analysis of sand used to make product, if applicable.
3. Description of any proposed admixtures including anti-washout and corrosion inhibitors.
4. Rigid fiberglass formwork.
5. Quick connection adaptor for end of pumping hose and ports so that no product leaks from hose or form as hose is being transferred from one port to the next.
6. Cementitious Hand Pack Grout for sealing the tops of the pile encasements.
7. Formwork catalog cuts; submit at least 21 Calendar days prior to ordering any material or assembling any formwork.

D. Shop Drawings:

1. Formwork with pumping port construction and elevations, spacers, and sealing details.

E. Design Data:

1. Cementitious grout or epoxy mortar mix proportions: indicating strength, brand and type of product, amounts of any admixtures and proportions and size of aggregates for each product.
2. Pumping Plan - indicate equipment and methods that will be used to place material within forms, including maximum time between mixing and placement of concrete.

F. Quality Assurance Documents:

1. Proposed method of sealing and resealing of hose and pump ports.
2. Cold and/or hot weather epoxy or cementitious grouting procedures.

1.04 DELIVERY, STORAGE AND HANDLING

A. All materials shall be delivered to the jobsite in their original, unopened packages, clearly labeled with the product identification, printed instructions and batch code.

B. Store and condition all epoxy components (resin, hardener and aggregate) in a dry environment between 60°F and 85°F (16°C and 29°C) for at least 24 hours prior to use. Refer to the product data sheet for more information. Store and condition other specified products in accordance with manufacturer’s recommendations.

C. Damaged or contaminated materials shall be removed from the site immediately and replaced at no additional cost to the owner.

1.05 PROJECT / SITE CONDITIONS

A. Refer to Part C - PREPARATION, ENVIRONMENTAL CONDITIONS, or contact the manufacturer directly for any physical or environmental limitations required by the product.

B. Contractor shall install epoxy or cementitious grout material only when environmental conditions match those recommended by manufacturer for specific product being used.

C. Contractor shall submit both hot and cold weather installation procedures to Owner's Representative a minimum of 2 weeks prior to installing product under these operating conditions. No product shall be placed under these conditions without written approval from Owner's Representative.

D. Do not install material if ambient surface or water temperature drops below minimum temperature allowed by manufacturer without written approval from Owner's Representative.

PART 2.0 - MATERIAL SPECIFICATIONS

2.01 MATERIALS

A. Epoxy Grout (mortar)

1. The pile encapsulation epoxy grout material shall be a 100% solids, premeasured, pre-packaged epoxy system containing thermosetting epoxy resins and inert fillers. The material shall be suitable for placement underwater via pouring or pumping. The manufacturer shall offer technical services and provide a representative at the job site for product training prior to product installation with reasonable advance notice at no additional cost to the owner.

2. The pile repair/encapsulation material shall meet the following performance criteria at 70°F:

a.	Compressive Strength, ASTM C579 B	
	1 Day	2,000 psi
	28 Days	9,500 psi
b.	Tensile Strength, ASTM C 307	2,000 psi
c.	Bond to Concrete, ASTM C 882	2,200 psi
d.	Linear Shrinkage, ASTM C 531	0.0%
e.	Water Absorption, ASTM C 413	0.0%
f.	Working Time	90 minutes

3. Acceptable manufactures of products are:

a. BASF Building Systems of Shakopee, MN

b. Five Star Products of Fairfield, CT

c. Sika Corporation of Lyndhurst, NJ

d. Simpson Strong Tie of Pleasanton, CA

e. Denso North America of Houston, TX

f. Or Approved Equal

4. Any proposed substitution of manufacturers listed above shall contain certified test data verifying conformance with this specification. Three references of successfully completed projects of similar nature and scope of the work detailed in this specification shall be provided, as well as a minimum ten year history of use in the industry. The testing laboratory shall certify to any modifications made to tests performed and provide details of modifications.

B. Cementitious Grout

1. Cementitious grout shall be a saltwater resistant, pre-packaged, cement-based grout requiring only the addition of potable water. The grout shall be formulated for exposure to fresh or saltwater environments. The manufacturer shall have at least 10 years of experience in the manufacture of precision cement-based grouts. The manufacturer shall offer technical services and provide a representative at the jobsite for product training prior to product installation upon five days advance notice at no additional cost to the owner.

2. The grout material shall meet all the following typical performance criteria when cured at 73°F (23°C):

a. Grout shall not contain metallic aggregate, expansive cement, or gas generating additives such as aluminum powder.

b. Grout shall contain an air release aggregate to generate positive expansion.

c. Early Height Change, ASTM C 827 0.0 to 4.0%

d. Hardened height Change, ASTM C 1090 0.0 to 0.3 %

e. Compressive Strength, ASTM C 109

28 days 6000 psi

f. Bond Strength, ASTM C882

28 Days 2000 psi

g. Working time 30 minutes minimum

h. Meets performance requirements of ASTM C 1107

3. Acceptable manufactures of products are:

a. BASF Building Systems of Shakopee, MN

b. Five Star Products of Fairfield, CT

c. Sika Corporation of Lyndhurst, NJ

d. Simpson Strong Tie of Pleasanton, CA

e. Denso North America of Houston, TX

f. Approved Equal

4. Any proposed substitution of manufacturers listed above shall contain certified test data verifying conformance with this specification. Three references of successfully completed projects of similar nature and scope of the work detailed in this specification shall be provided, as well as a minimum ten year history of use in the industry. The testing laboratory shall certify to any modifications made to tests performed and provide details of modifications.

C. Aggregate

1. Utilize quality and quantity of aggregate as directed by manufacturer.

D. Water

1. Water shall comply with the requirements of ASTM C 94 and the chloride and sulfate limits in accordance with ASTM D 512 and ASTM D 516. Mixing water shall not contain more than 500 parts per million of chlorides as Cl and not more than 100 parts per million of sulfates as SO4. Water shall be free from injurious amounts of oils, acids, alkalis, salts, and organic materials. Where water from reprocessed concrete is proposed for use in the work, submit results of tests to verify that the treatment has negated adverse effects of deleterious materials.

E. Forms

1. General

a. Formwork shall conform to the recommendations of ACI 347R. Forms shall be a minimum 1/8 in. thick translucent rigid fiberglass reinforced plastic (FRP) designed to confine the concrete and shape it to the required dimensions. Forms shall have sufficient strength to withstand the pressure resulting from all environmental forces prior to the placement of concrete as well as forces exerted during the placement of product and shall have sufficient rigidity to maintain specified tolerances. Earth cuts shall not be used as forms for vertical surfaces unless indicated on the Contract Documents.

b. Shop drawings of all formwork shall be submitted. These submittals shall include: material type and strength of formwork, method of sealing formwork in order to prevent leakage of concrete, type and locations of all pumping ports and vents, all supports and the location of shoring and reshoring, and structural computations relating test strength of concrete at the various stages to the strength requirements for the proposed forming and shoring system and the anticipated loads.

c. All spacers, straps, and ties shall be non-metallic and non-corrosive. Spacers shall be secured so as not to move out of position during the placement of concrete.

d. Shop drawings and computations shall be certified by, and bear the seal of, a Professional Engineer experienced in the design of formwork and licensed in the State in which the Work is to be performed.

2. Design and Installation

   a. Design, engineering, and construction of formwork shall be the responsibility of Contractor. Approval of formwork shop drawings by Owner is for overall conception only, and shall not relieve Contractor from its responsibility for final safety and conformance with specified requirements

   b. Contract drawings of formwork show one pump port placed near the bottom of the form. This is for visual representation only. The final design, overall number of pump ports and elevation of these pump ports is the sole responsibility of the contractor.

   c. All pump ports shall have a watertight method of closure so that after the hose is removed from the port no water shall enter the port.

   d. Forms shall be a rigid translucent material so that the product level inside the form is visible when looking at the outside face of the form. Form facing materials shall be nonreactive with product and shall be selected to produce, or facilitate, the required surface finish. The maximum deflection of facing materials reflected in product surfaces to be exposed to view in the finished work shall be 1/240 of the span between structural members.

   e. Forms shall be sufficiently tight to prevent the loss of any material during the pumping and curing processes. The means and methods of maintaining the intended form shape and seal shall be the sole responsibility of the contractor.

   f. Positive means of adjustment (strapping) shall be provided and all settlement shall be taken up during concrete placement operations. Forms shall be securely braced against lateral deflections.

   g. Formwork shall be so anchored to shores or other supporting surfaces or members so that upward or lateral movement of any part of the formwork system, during product placement, will be prevented.

3. Tolerances

   Formwork shall be constructed so that product surfaces will conform to the tolerance limits recommended in ACI 347R.

   a. Flexural Strength ASTM D 790 34,000 psi (234 MPa)

   b. Flexural Modulus ASTM D 790 1.9 x 106 psi (13,100 MPa)

   c. Ultimate Tensile Strength ASTM D 638 23,000 psi (158 MPa)

   d. Tensile Modulus ASTM D 638 1.7 x 106 psi (11,724 MPa)

   e. Water Absorption ASTM D 570 0.09%

   f. Barcol Hardness 50

   g. UV Resistance ASTM G 153 No chipping, flaking or peeling at 500 hours

4. Preparation of Form Surfaces

    a. All surfaces of forms and embedded materials shall be cleaned of any debris and of all other foreign material, before concrete is placed.

5. Removal of Forms

    a. Formwork shall remain in place. However formwork from one of the installed cementitious grout encasements shall be fully removed in order to facilitate an inspection of the underlying encasement. Forms may be removed after 28 days or when cube breaks of the product batch used during the installation of that encasement show the product has reached the required design strength. If significant defects are noted on the encasements with removed forms, the Owner's Representative shall direct the Contractor to remove the additional cementitious grout encasement at no additional cost to the Owner. Significant defects shall include but not be limited to:
        (i) Soft epoxy mortar or cementitious grout: epoxy mortar or cementitious grout is soft and allows penetration with a handheld hammer.
        (ii) Voids: epoxy mortar or cementitious grout is missing form intended location and reinforcing steel is exposed.
        (iii) Shallow Coverage: Reinforcing steel (including tie wires) is visible on the outside of or protruding from the outside face of the epoxy mortar or cementitious grout encasement.
        (iv) Geometry of Encasement: Encasement geometry does not meet the placement tolerances established in this section of the specifications.
        (v) Horizontal Construction Joints: epoxy mortar or cementitious grout was not placed in a continuous manner creating a horizontal joint in the encasement.

    b. Removal of forms shall be in a manner to insure complete safety of the structure, shall be in accordance with the applicable requirements of ACI 318 and this Section of the Specification, and shall be subject to the approval of Owner.

    c. When repair of surface defects or finishing is required at an early age, as specified herein or as directed by Owner, forms shall be removed as soon as the concrete has hardened sufficiently to resist damage from removal operations.

6. Embedded Items

    a. All embedded items including pile standoffs shall be nonmetallic.

2.02 EXISTING CONCRETE SURFACES

A. Completely remove all loose, delaminated, and unsound concrete, oil, grease, laitance, marine growth and other contaminants. Prepare concrete using high pressure water blasting or other suitable mechanical means to obtain sound, clean

and roughened surfaces. Contractor shall take precautions in order not to remove intact concrete section from the existing piles during preparation activities

B. The permissible elapsed time between the cleaning of a pile and the installation of the encasement on that pile shall not exceed 72 hours. If this time frame is exceeded contractor shall re-clean the pile prior to placement of epoxy mortar or cementitious grout.

C. All cracks shall be brought to the attention of the engineer and a determination made of whether the cracks are subject to movement. The cracks shall be repaired as directed prior to installation of fiberglass jacket and repair material.

2.03 REINFORCEMENT

A. All reinforcement bars shall conform to ASTM A615, epoxy-coated in accordance with A775. All reinforcing shall be Grade 60 steel with fy = 60 ksi.

B. All reinforcement mesh shall conform to ASTM A185, epoxy-coated in accordance with A884.

C. All exposed existing reinforcing steel that has lost bond with the concrete or has more than one-half of its circumference exposed should be undercut by at least 1/2 inch.

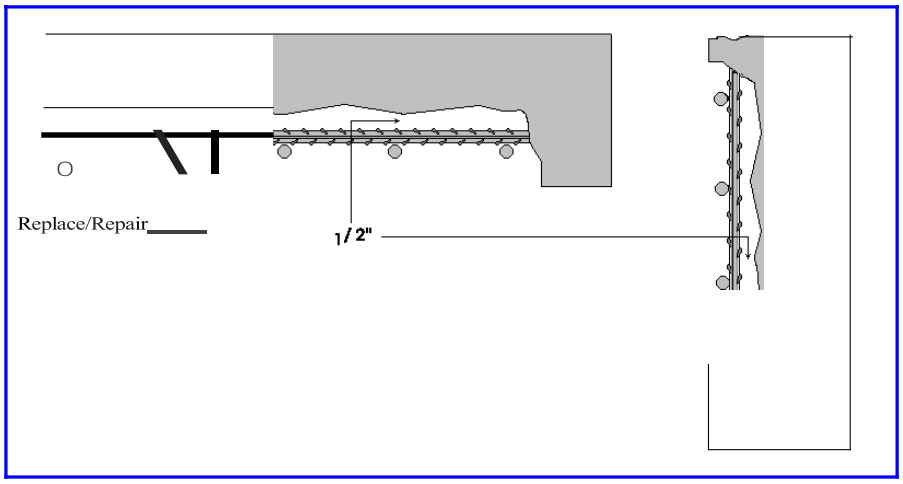

Reinforcement Profile Example

D. If more than 25% of the diameter of a reinforcing bar has been deteriorated, the bar may require replacement or need to be spliced as directed by the engineer. When this condition is encountered at any time, it shall be immediately brought to the Owner's Representative's attention.

E. All reinforcement shall be rigidly secured and supported.

F. All exposed reinforcing steel shall be free of all loose scale, rust, oxidation and other contaminants. Blast steel to an SSPC - SP6 commercial finish or better. Exposed reinforcing steel may be sealed or primed if a delay occurs between surface preparation and epoxy grout placement.

2.04 JACKET PLACEMENT

A. Fiberglass jackets may be one or two piece and should include standoffs that maintain specified annular space. Spacers/standoffs may be pre-molded into jackets or applied at job site.

B. For pumping applications, secure suitable pump ports to jacket. Lowest port shall be maximum of 12 inches from the bottom of the formwork. Next highest port shall be 180° opposite the first port. If additional ports are needed alternate the placement 180° from the previous port.

C. Use a suitable sealing compound to fill the groove side of the jacket opening.

D. Wooden braces, battens, or strong backs should be placed on the outside of the jacket to prevent bulging. When the jacket is in position and the straps tight use stainless steel self-drilling/tapping screws to secure the tongue and groove joint. Locate screws so they go through both sides of the groove and the tongue. Use screws that are long enough to penetrate the jacket but not long enough to extend to the pile itself.

2.05 JACKET SEALING

The choice of bottom seal should be determined by environmental restrictions, owner preference, or contractor experience. Typical bottom seals include closed foam strips, oakum and resin, nylon retainers and epoxy packing. Earth may not be used in lieu of bottom seal.

2.06 MIXING

A. Mix epoxy parts, water and aggregate according to manufacturer’s recommendation.

B. Mix cementitious grout water and aggregate according to manufacturer’s recommendation.

C. Provide an adequate number of mixers in good operating condition for uninterrupted placement. Do not exceed one-half the maximum capacity of the mixer. A concrete mixer (spinning barrel mixer) is not acceptable for mixing epoxy mortar.

D. Do not mix more material than can be placed within the working time of the mortar or grout.

E. Place mortar or grout immediately after mixing.

PART 3.0 - APPLICATION

3.01 APPLICATION

A. Pumping

1. Grout, of either material, shall be placed using the direct pumping method and shall not be permitted to fall through the water column. Pumping at each elevation shall continue until the concrete has reached the level of the next highest pumping port.

2. A diver shall monitor the connection of the tube to the pump port for the duration of pumping operations. The mouth of the tube shall, at all times, remain securely connected to the pump port so as to exert the necessary resistance on the pump to prevent vacuum build-up from causing blockage in the pipe line.
3. Each encasement shall be placed in a continuous manner from start to finish over its full height. Horizontal construction joints are not permitted, except when a grout plug is to be provided at the bottom of the encasement. Cementitious grout or epoxy mortar placement shall begin through the pump port at the lowest elevation.
4. During transition of the tube from one pump port to another, no water shall be permitted to enter the tube and no concrete shall leak from the pump ports.
5. If a blockage or loss of seal occurs, material placement shall cease immediately; the tube shall be detached from pump port, the blockage cleared, the tube recharged and reattached to pump port. If it is feasible to clear the blockage without removing the tube, that maybe permitted if approved by the Owner's Representative.
6. Additional tempering of mixed grout (i.e. the addition of water, plasticizers or other admixtures) is not be permitted without written approval from the Owner's Representative.
7. A peristaltic type pump is recommended for pumping epoxy grout. Contractor shall utilize adequate pumping equipment to ensure smooth continuous pumping operations.
8. Prime pump and lines with a suitable primer that will not contaminate grout. Ensure material used for priming is discarded and not used for jacket filling.
9. Allow grout to overtop form until all water and laitance has been removed from the inside of the form.

3.02 TESTING

A. General

1. Testing agencies shall conform to the requirements of ASTM E329.
2. Construction operations will be tested and inspected as the Work progresses. Failure to detect any defective Work or materials shall not in any way prevent later rejection when such defect is discovered, nor shall it obligate Owner for final acceptance.
3. Contractor shall cooperate with Owner by providing access to the Work for any testing and inspection as required by Owner.
4. Testing services, required to be provided by Contractor, shall be performed by a testing agency approved by Owner. Test reports, including results and interpretation of results, and certification of conformance with specified requirements, shall be transmitted directly from testing agency to Owner.

B. Strength Testing

1. Samples used in testing procedures shall be taken from the end of the hose that will be attached directly to the pumping ports of the form.

2. Strength test of cementitious and epoxy grout shall be in conformance with ASTM C109 C579 B respectively.

END OF SECTION 03310

EXHIBIT H

PROJECT AREA MAPS

Esplanade
Wagner Park
West St
FDR Dr
Albany St
Battery Pl
W Thames St
3rd Pl
2nd Pl
Washington St
Rector
Cedar
Carlisle
Belford - World Financial Center
Belford - Midtown
Sandy Hook - Midtown
Wall St - World Financial Center

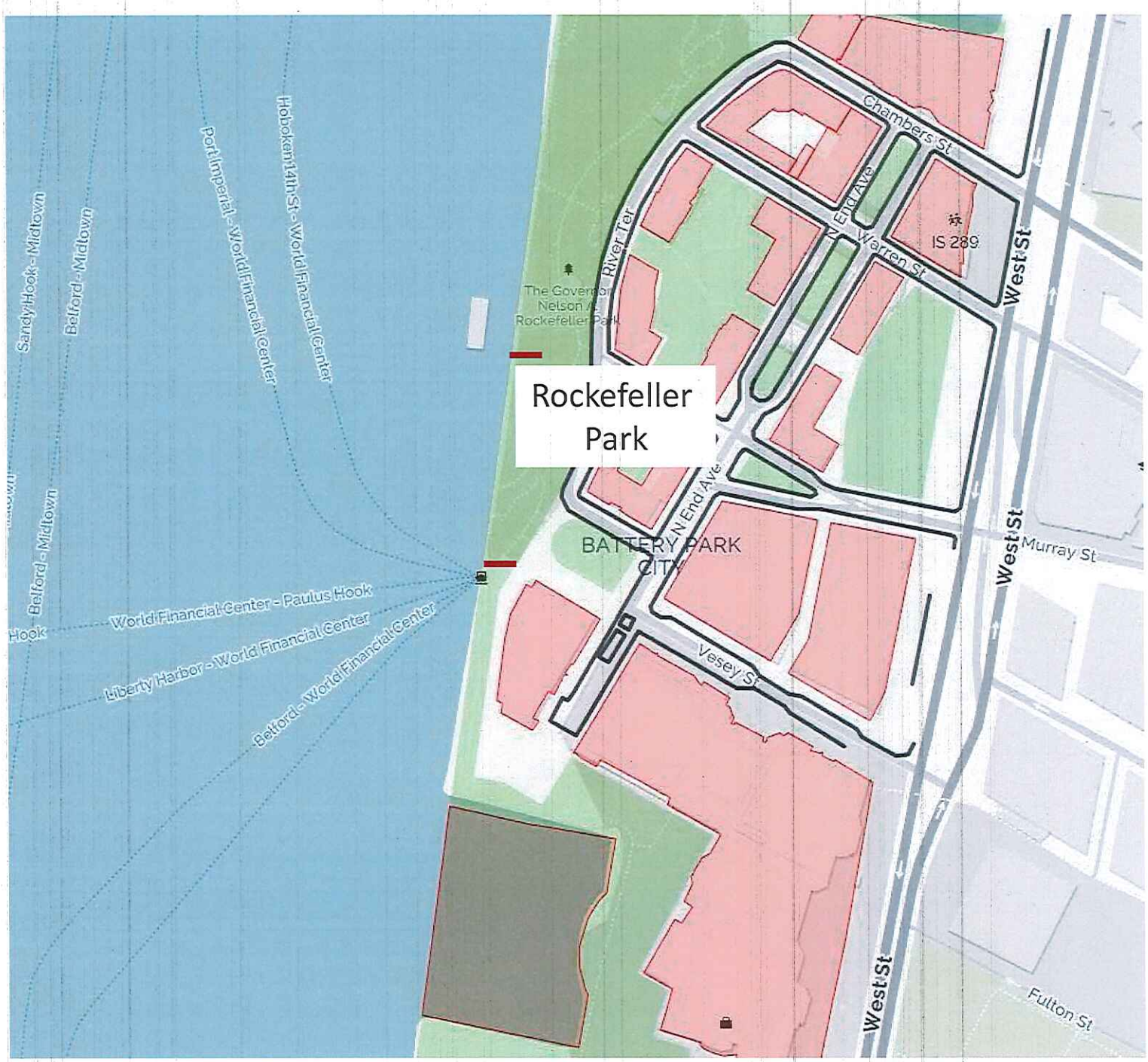
Rockefeller Park
Sandy Hook - Midtown
Belford - Midtown
Port Imperial - World Financial Center
Hoboken 14th St - World Financial Center
Belford - Midtown
World Financial Center - Paulus Hook
Liberty Harbor - World Financial Center
Belford - World Financial Center
River Ter
N End Ave
Chambers St
Warren St
IS 289
West St
BATTERY PARK CITY
Vesey St
Murray St
Fulton St

PILE IDENTIFICATION/NOMENCLATURE

INDIVIDUAL PILES SHALL BE REFERENCED AS FOLLOWS:

2 – 31 – C – BAT

- BAT — INDICATES BATTER PILE (IF REQUIRED)
- C — INDICATES PILE POSITION IN PILE BENT, "A" IS ALWAYS THE FIRST OFFSHORE PILE IN THE PILE BENT. WHEN 2 PILES OCCUPY THE SAME POSITION IN A PILE BENT THEY SHALL BE REFERENCED BY THEIR POSITION RELATIVE TO THE PILE BENT ROW I.E. "C-EAST", OR "C-WEST".
- 31 — INDICATES PILE BENT NUMBER, PILE BENT NUMBERING STARTS AT "1" FOR EACH RESPECTIVE PLAN AREA. PILE BENTS ARE TYPICALLY NUMBERED IN ASCENDING ORDER FROM SOUTH TO NORTH.
- 2 — INDICATES THE RESPECTIVE PLAN AREA. THERE ARE 5 PLAN AREAS LABELED SOUTH TO NORTH AS INDICATED IN THE "KEY PLAN" AND AS FOLLOWS:
  - PLAN AREA 1 – EXTENDS FROM SOUTHERN CONTRACT LIMIT TO THE NORTH END OF SOUTH COVE.
  - PLAN AREA 2 – EXTENDS FROM NORTH END OF SOUTH COVE TO SOUTH END OF NORTH COVE.
  - PLAN AREA 5 – NORTH COVE REGION.
  - PLAN AREAS 3 & 4 – EXTENDS FROM NORTH END OF NORTH COVE TO WARREN STREET.
  - PLAN AREA 6 – THE NORTH ESPLANADE TO THE NORTHERN CONTRACT LIMIT.

HUDSON RIVER FLOW

EBB

FLOOD

-42'-7"

-38'-5"

-31'-1"

-25'-11"

-16'-11"

EXPANSION JOINT (TYP.)

A 1.0

B 1.0

TO NEW YORK HARBOR UPPER BAY

MATCH LINE A

WAGNER PARK AREA

APPROXIMATELY 424 Piles

1"=30'

30' 0 30' FEET

SCALE: 1" = 30'

70'-0"

BULKHEAD LINE EL. +7.0

MHW EL. 0.0

MLW EL. -7.0

7"±

PRECAST CONCRETE SEAWALL

COMPOSITE SLAB EL.+2.0

EL.-2.85

RIPRAP UP TO 2'ø

6" CREOSOTED TIMBER SHEETING

EL. -14.0

1½ : 1

1 : 1

5.dwg PLOT TIME: Mon, 11 Nov 2013 - 1:14pm LAST SAVE: Tue, 02 Feb 2010 - 9:04am BY: lperez

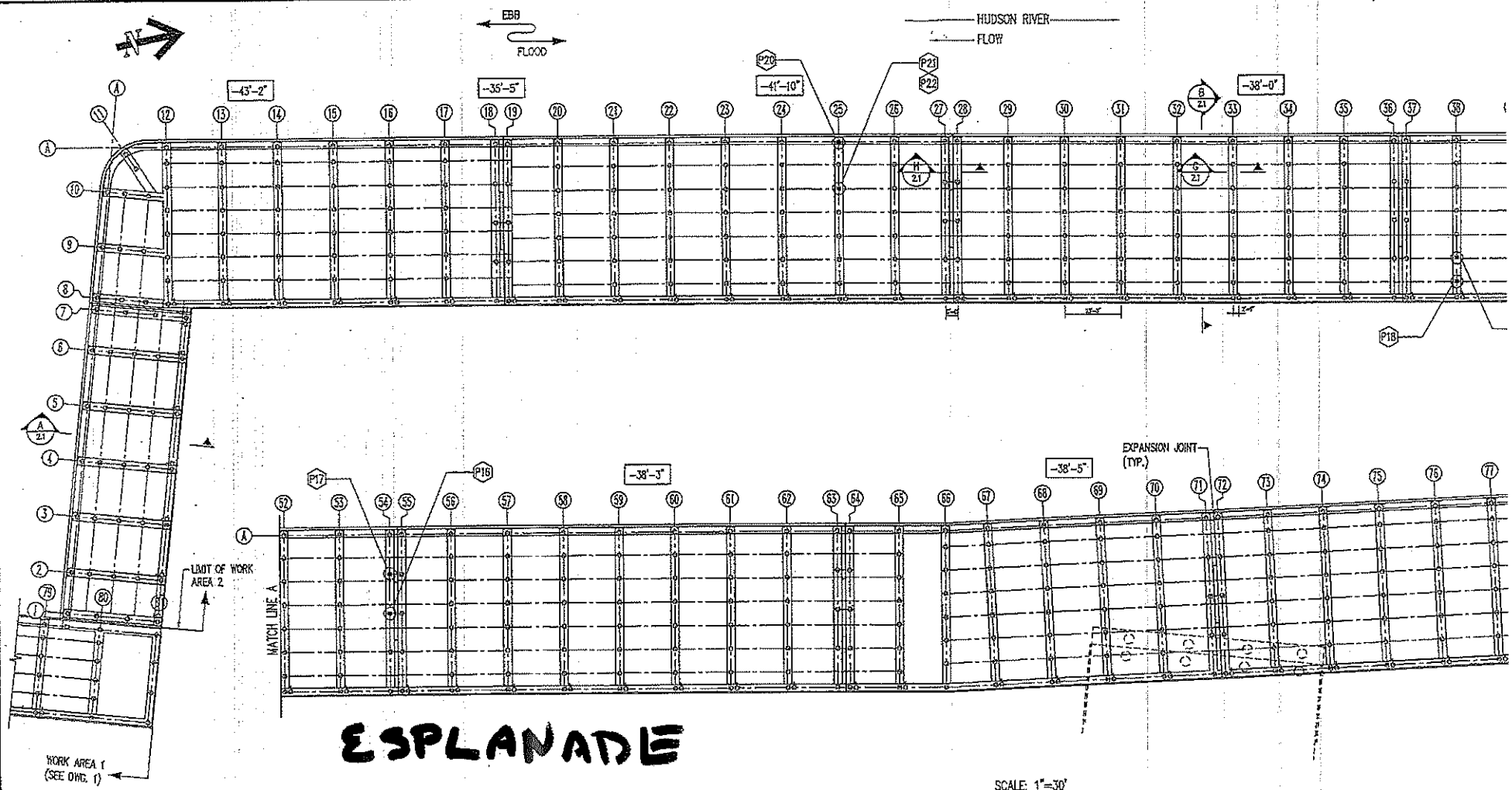

ESPLANADE

APPROXIMATELY 157 PILES

PILE IDENTIFICATION/NOMENCLATURE

INDIVIDUAL PILES SHALL BE REFERENCED AS FOLLOWS:

2 – 31 – C – BAT

- BAT — INDICATES BATTER PILE (IF REQUIRED)
- C — INDICATES PILE POSITION IN PILE BENT. "A" IS ALWAYS THE FIRST OFFSHORE PILE IN THE PILE BENT. WHEN 2 PILES OCCUPY THE SAME POSITION IN A PILE BENT THEY SHALL BE REFERENCED BY THEIR POSITION RELATIVE TO THE PILE BENT ROW I.E. "C-EAST", OR "C-WEST".
- 31 — INDICATES PILE BENT NUMBER. PILE BENT NUMBERING STARTS AT "1" FOR EACH RESPECTIVE PLAN AREA. PILE BENTS ARE TYPICALLY NUMBERED IN ASCENDING ORDER FROM SOUTH TO NORTH.
- 2 — INDICATES THE RESPECTIVE PLAN AREA. THERE ARE 5 PLAN AREAS LABELED SOUTH TO NORTH AS INDICATED IN THE "KEY PLAN" AND

Eng PLOT TIME: Mon, 11 Nov 2013 - 1:14pm LAST SAVE: Tue, 02 Feb 2010 - 9:04am MK: lperez

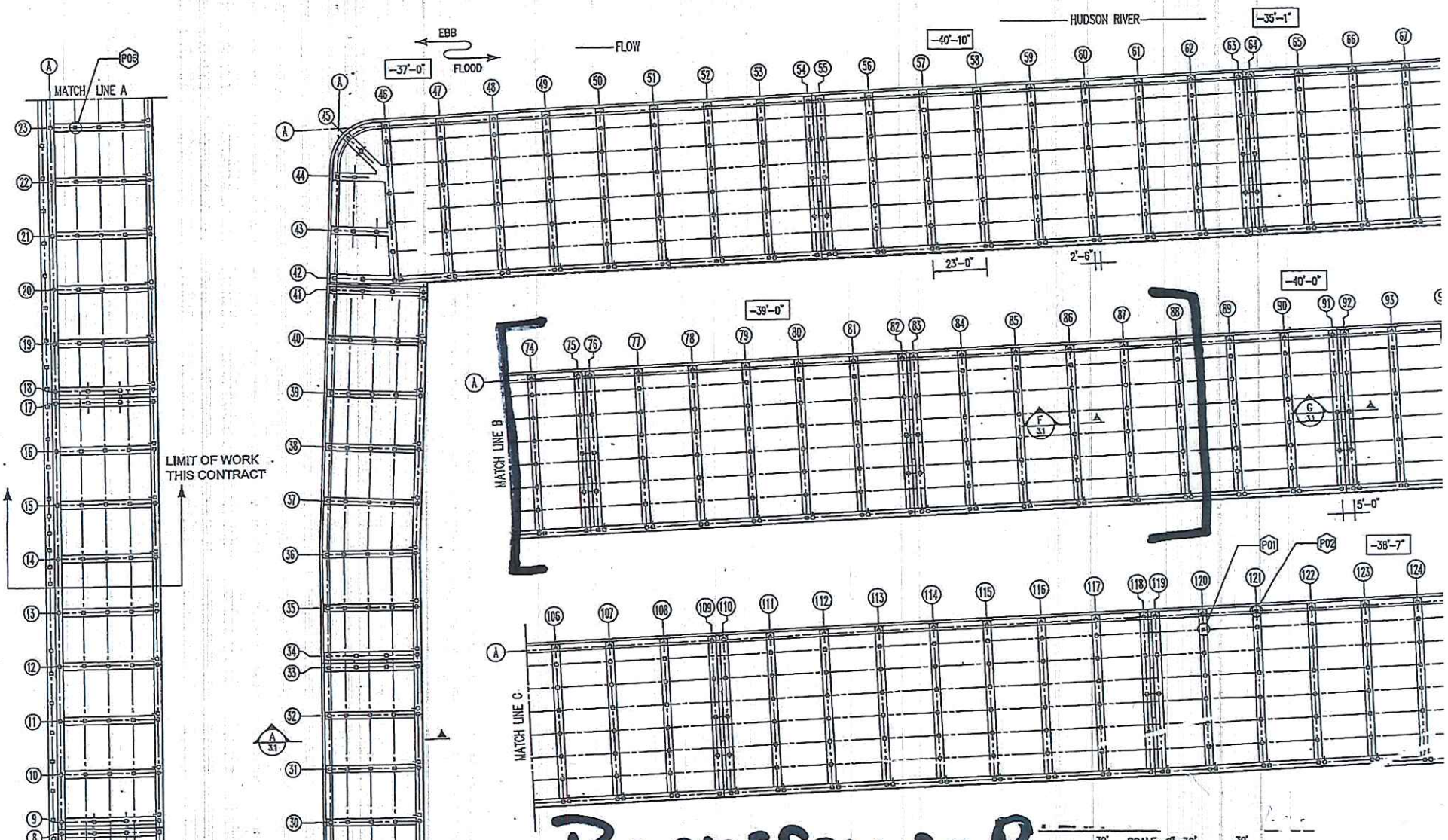

ROCKEFELLER PARK

APPROXIMATELY
103 Piles

PILE IDENTIFICATION/NOMENCLATURE

INDIVIDUAL PILES SHALL BE REFERENCED AS FOLLOWS:

PLOT TIME: Mon, 11 Nov 2013 - 1:14pm LAST SAVE: Tue, 02 Feb 2010 - 8:04am BY: lopez

EXHIBIT I

PERMITS

DEPARTMENT OF THE ARMY
U.S. ARMY CORPS OF ENGINEERS, NEW YORK DISTRICT
JACOB K. JAVITS FEDERAL BUILDING
26 FEDERAL PLAZA
NEW YORK NEW YORK 10278-0090

REGULATORY BRANCH

JUL 18 2018

SUBJECT: Permit Application File Number NAN-2018-00504-ESW by the Battery Park City Authority for Pile Maintenance in Hudson River at the Battery Park City, Borough of Manhattan, New York County, City of New York, New York

1. PERMITTEE:
Hugh L. Carey Battery Park City Authority
200 Liberty Street, 24th Floor
New York, New York 10281
(212) 417-2000

2. On April 12, 2018, the New York District of the U.S. Army Corps of Engineers received a request for Department of the Army authorization from the Battery Park City Authority for the repair of approximately 7,400 linear feet of the esplanade which averages between 20-25 feet wide (approximately 170,200 square feet/3.9-acre) by encasing the severely deteriorated existing 20-inch square pre-cast concrete piles in 38-inch diameter concrete jackets with reinforcing bar and wire mesh. Minimally deteriorated piles will be encased in a 22-inch diameter jacket. The total amount of concrete epoxy grout in all of the pile jackets is approximately 607 cubic yards of discharge in an estimated footprint of 1,535 square feet. The substrate around the base of the pile would be removed by hand in order for the encasement to be buried below the mud line, and replaced to grade once the work on each pile is completed. The temporary sidecast would consist of approximately 2,264 square feet of fill. The regulated activities would be conducted in four phases over a period of four years and is located in the Hudson River at the Battery Park City, Borough of Manhattan, New York County, City of New York, New York.

3. The specific applicant-provided details are as shown on the attached permit drawings titled "Applicant: Battery Park City Authority", dated April 3, 2018, prepared by DKR Shores, Inc.

4. This determination covers only the work described in the submitted material. Any major changes in the project may require additional authorizations from the New York District of the U.S. Army Corps of Engineers.

5. Based on the information submitted to this office and accomplishment of any required notification in accordance with the applicable federal requirements, our review of the subject work indicates that an individual Department of the Army permit is not required. It appears that the activities within the jurisdiction of this office could be accomplished under Department of the Army Nationwide General Permit Number 3 MAINTENANCE, in accordance with Section 10 of the Rivers and Harbors Act of 1899 (33 U.S.C. 403) and Section 404 of the Clean Water Act (33 U.S.C. 1344, as amended). The nationwide permits are prescribed as a Reissuance of Nationwide Permits in the Federal Register

dated January 6, 2017 (82 FR 1860). The subject work may be performed without further authorization from this office provided it complies with Sections A through D, Number 3 MAINTENANCE; New York District regional conditions; the following work-specific Special Conditions listed below; and any applicable regional conditions added by the State of New York.

6. Other than the work-specific Special Conditions listed below, the 2017 nationwide general permits in the State of New York, including their final regional conditions, water quality certifications, and coastal zone concurrence statements are available at:

www.nan.usace.army.mil/Portals/37/docs/regulatory/publicnotices/Regional%20Gen%20Permit/PN-RB%20NAN%20FinalRegionalConditionsWQC%20CZMforNYdated%2021-MAR-2017.pdf

If you require a specific paper copy, please contact our Regulator-of-the-Day at 917-790-8511 to request one be mailed to you. Please be sure to have the above eighteen-character file number readily available when you call.

7. Work-specific Special Conditions:

(A) The permittee understands and agrees that, if future operations by the United States require the removal, relocation, or other alteration, of the structure or work herein authorized, or if, in the opinion of the Secretary of the Army or his authorized representative, said structure or work shall cause unreasonable obstruction to the free navigation of the navigable waters, the permittee will be required, upon due notice from the Corps of Engineers, to remove, relocate, or alter the structural work or obstructions caused thereby, without expense to the United States. No claim shall be made against the United States on account of any such removal or alteration.

(B) The permittee shall sign and submit the attached compliance certification form to this office **within 30 days of COMPLETION** of the regulated activity authorized by this permit and any mitigation work required by Special Condition.

(C) The permittee, and their agents, shall utilize best management practices to minimize turbidity during all in-water work activities as well as prevent construction materials, including debris from entering the waterway to become drift or pollution hazards.

(D) The permittee shall not conduct in-water work in shortnose sturgeon overwintering grounds from November 1–March 15 of any calendar year.

commencement of the authorized work you may request an approved JD, which may be appealed, by contacting the New York District, U.S. Army Corps of Engineers for further instruction. To assist you in this decision and address any questions you may have on the differences between preliminary and approved jurisdictional determinations, please review U.S. Army Corps of Engineers Regulatory Guidance Letter No. 16-01, which can be found at:

http://www.usace.army.mil/Portals/2/docs/civilworks/RGLS/rgl_6-01_app1-2.pdf

9. This verification is valid until March 18, 2022, unless the nationwide permit is modified, reissued, or revoked. This verification will remain valid until March 18, 2022, if the activity complies with the terms of any subsequent modifications of the nationwide permit authorization. If the nationwide permits are suspended, revoked, or modified in such a way that the activity would no longer comply with the terms and conditions of a nationwide permit, and the proposed activity has commenced, or is under contract to commence, the permittee shall have twelve (12) months from the date of such action to complete the activity.

10. In order for us to better serve you and others, please complete our Customer Service Survey located at:

http://www.nan.usace.army.mil/Missions/Regulatory/CustomerSurvey.aspx

11. Any inquiries should be directed to our Regulator-of-the-Day at 917-790-8511. Please be sure to have the above eighteen-character file number readily available when you call.

Ronald R. Pinzon
Chief, Eastern Section

Enclosures (3)
1. Dated Permit Drawings
2. Completion Form
3. Preliminary JD

Copies furnished:
McLaren Engineering Group
Attn: Craig P. Plate
Attn: Kaitlyn McGrath
100 Snake Hill Road
West Nyack, New York 10994

NATIONWIDE GENERAL PERMIT COMPLIANCE CERTIFICATION AND REPORT FORM

Permit File Number: NAN-2018-00504-ESW
Permittee: Battery Park City Authority
Location: 40.71344167, -74.0162084 Battery Park City, Borough of Manhattan, New York County, City of New York, New York

Date Permit Letter Issued: JUL 18 2018

Within 30 days of the completion of the activity authorized by this nationwide general permit and any mitigation required in the verification letter, please sign this certification and return it to the address at the bottom of this form.

Please note that your permitted activity is subject to a compliance inspection by a U.S. Army Corps of Engineers representative. If you fail to comply with the permit's terms and conditions you are subject to permit suspension, modification or revocation.

I hereby certify that the work authorized by the above referenced nationwide general permit has been completed in accordance with the terms and conditions of said permit, and required mitigation was completed in accordance with the permit conditions.

_____ _____
Signature of Permittee **Date**

FOLD THIS FORM INTO THIRDS, WITH THE BOTTOM THIRD FACING OUTWARD. TAPE IT TOGETHER AND MAIL TO THE ADDRESS BELOW OR FAX (212) 264-4260.

_____
_____
_____

PLACE STAMP HERE

DEPARTMENT OF THE ARMY
NEW YORK DISTRICT CORPS OF ENGINEERS
JACOB K. JAVITS FEDERAL BUILDING
ATTN: CENAN-OP-RE
NEW YORK, NEW YORK 10278-0090

USACE FILE: NAN-2018-00504-ESW

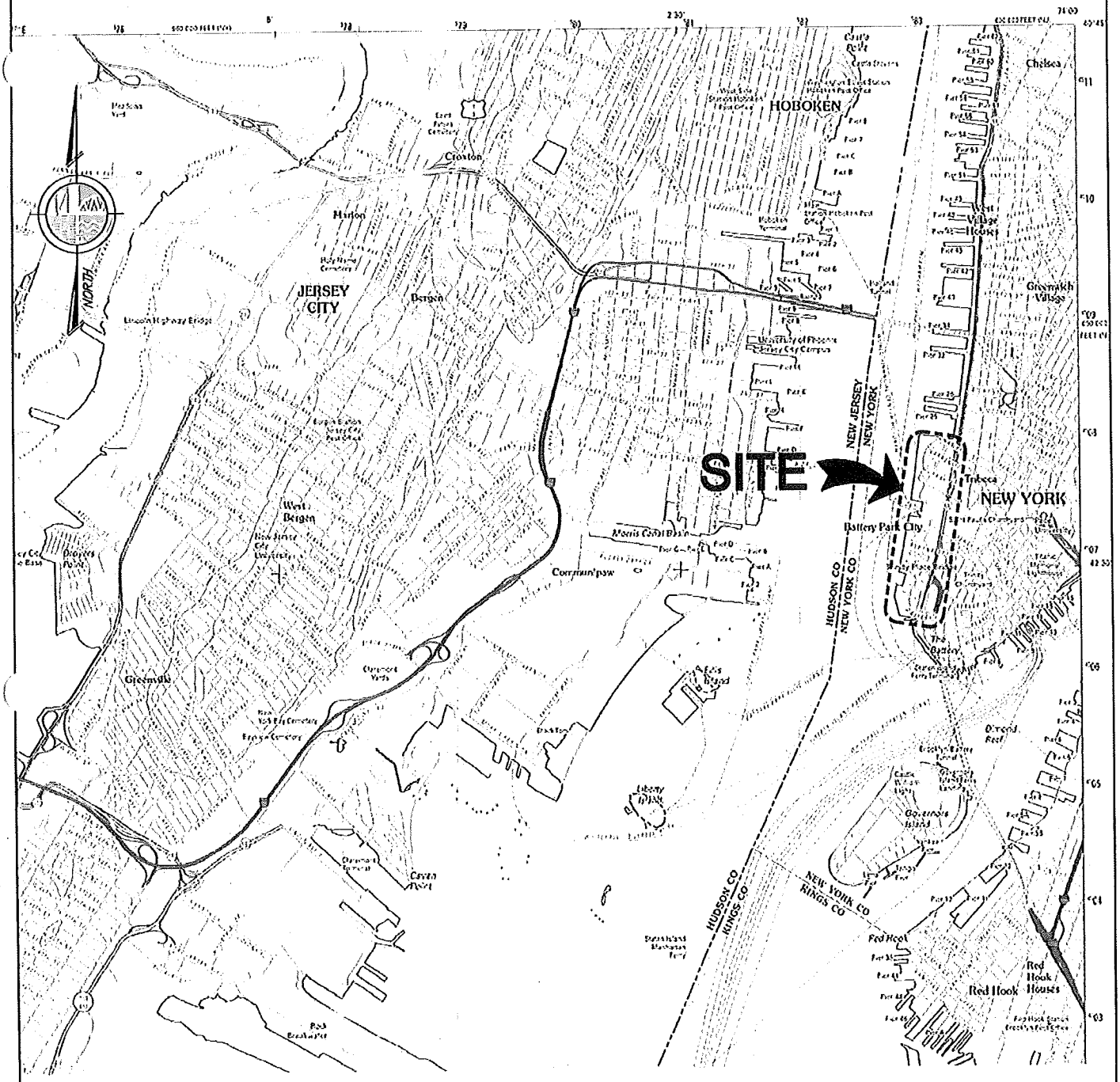

LOCATION MAP

N.T.S.

PURPOSE: ESPLANADE REPAIRS

DATUM: MHD

ADJACENT OWNERS:
SEE ATTACHED LIST.

BATTERY PARK CITY ESPLANADE
PILE REMEDIATION PROGRAM

APPLICANT: HUGH L. CAREY
BATTERY PARK CITY AUTHORITY
200 LIBERTY ST., 24TH FLOOR
NEW YORK, N.Y. 10281

AGENT: M.G. McLAREN, P.C.
100 SNAKE HILL ROAD
WEST NYACK, N.Y. 10994

LOCATION MAP

IN: MANHATTAN, NY
AT: BATTERY PARK CITY
COUNTY OF: NEW YORK
STATE: NY

SHT 1 OF 15 03/30/2018

FILE NAME: P:\Proj140\140950.32\10_Dwgs\CADD\Battery Park Army Corp Permit\Location Map.dwg PLOT TIME: Wed, 28 Mar 2018 - 9:52am LAST SAVE: Wed, 28 Mar 2018 - 9:31am BY: eckl

JUL 18 2018

USACE FILE: NAN-2018-00504-ESW

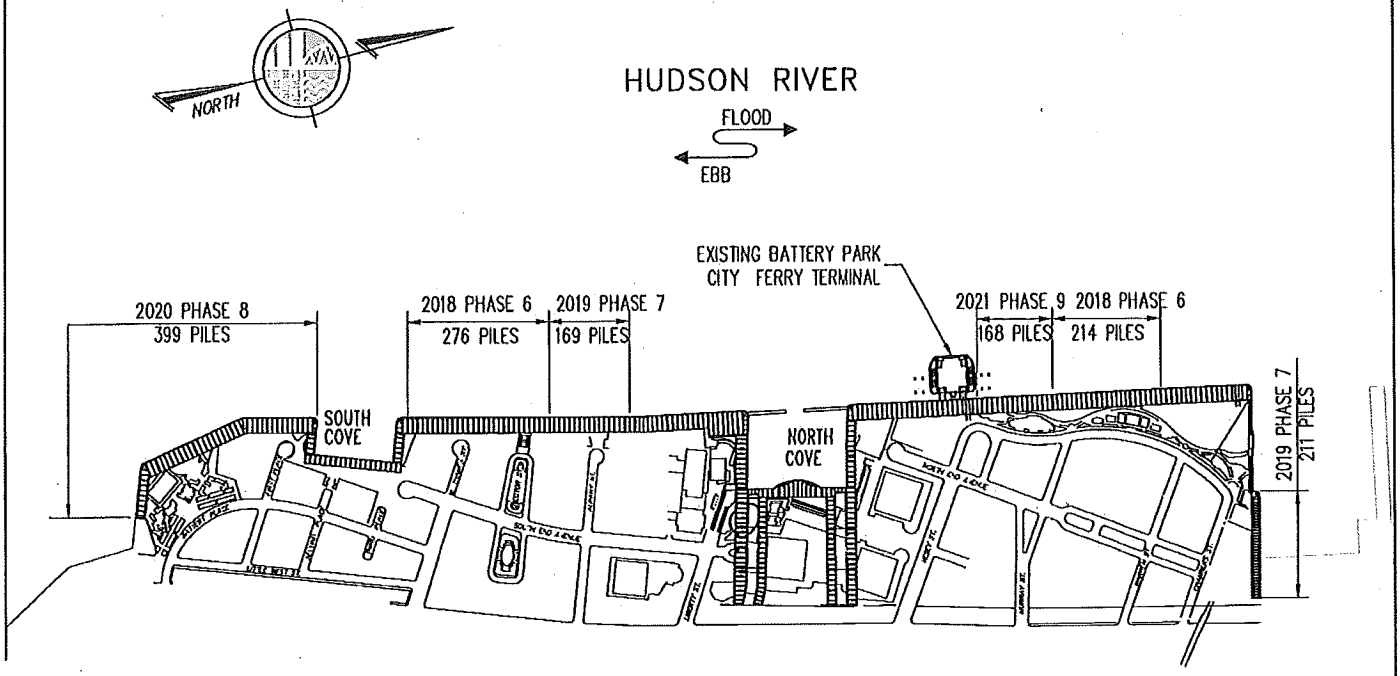

OVERALL SITE PLAN

800' 400' 0 800'

FEET

SCALE: 1" = 800'

NOTE: AREA DESIGNATIONS TAKEN FROM AS-BUILT "BATTERY PARK CITY" DRAWINGS DEVELOPED BY MUESER, RUTLEDGE, WENTWORTH, AND JOHNSTON CONSULTING ENGINEERS, DATED JUNE 17, 1974.

PURPOSE: ESPLANADE REPAIRS DATUM: MHD DJACENT OWNERS: SEE ATTACHED LIST.	BATTERY PARK CITY ESPLANADE PILE REMEDIATION PROGRAM APPLICANT: HUGH L. CAREY BATTERY PARK CITY AUTHORITY 200 LIBERTY ST., 24TH FLOOR NEW YORK, N.Y. 10281 AGENT: M.G. McLAREN, P.C. 100 SNAKE HILL ROAD WEST NYACK, N.Y. 10994	OVERALL SITE PLAN IN: MANHATTAN, NY AT: BATTERY PARK CITY COUNTY OF: NEW YORK STATE: NY SHT 2 OF 15 03/30/2018

FILE NAME: P:\Proj\140\140550.32\10_Design\CADD\Battery Park Army Corp Permit\Overall Site Plan.dwg PLOT TIME: Wed, 28 Mar 2018 - 9:52am LAST SAVE: Wed, 28 Mar 2018 - 9:10am BY: echiu

JUL 18 2018

USACE FILE: NAN-2018-00504-ESW

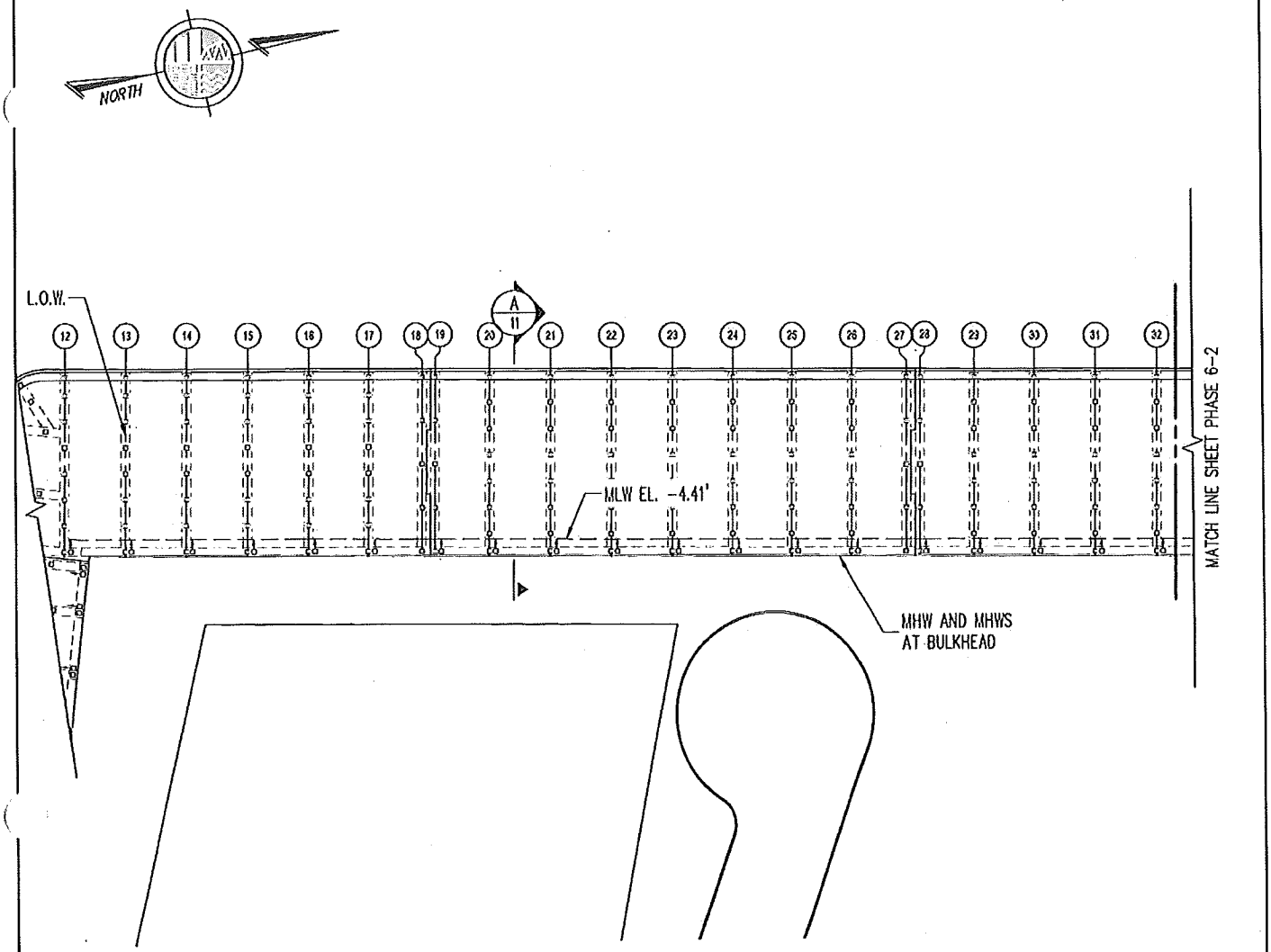

PHASE 6 - SHEET 1 OF 4

0 60' 120'

1"=60'

NOTE:
L.O.W. = LIMIT OF WORK

LEGEND:

- 20" x 20" SQUARE PRESTRESSED CONCRETE PILE
- 20" x 20" SQUARE PRESTRESSED CONCRETE BATTER PILE

PURPOSE: ESPLANADE REPAIRS DATUM: MHD DJACENT OWNERS: SEE ATTACHED LIST.	BATTERY PARK CITY ESPLANADE PILE REMEDIATION PROGRAM APPLICANT: HUGH L. CAREY BATTERY PARK CITY AUTHORITY 200 LIBERTY ST., 24TH FLOOR NEW YORK, N.Y. 10281 AGENT: M.G. McLAREN, P.C. 100 SNAKE HILL ROAD WEST NYACK, N.Y. 10994	2018 PHASE 6 SHEET 1 OF 4 IN: MANHATTAN, NY AT: BATTERY PARK CITY COUNTY OF: NEW YORK STATE: NY SHT 3 OF 15 03/30/2018

FILE NAME: P:\Proj140\140950.32\10_Dwgs\CADD\Battery Park Army Corp Permit\Plans of 2018 Phase 6.dwg PLOT TIME: Wed, 28 Mar 2018 - 9:52am LAST SAVE: Wed, 28 Mar 2018 - 9:51am BY: ecb

JUL 18 2018

USACE FILE: NAN-2018-00504-ESW

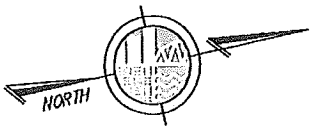

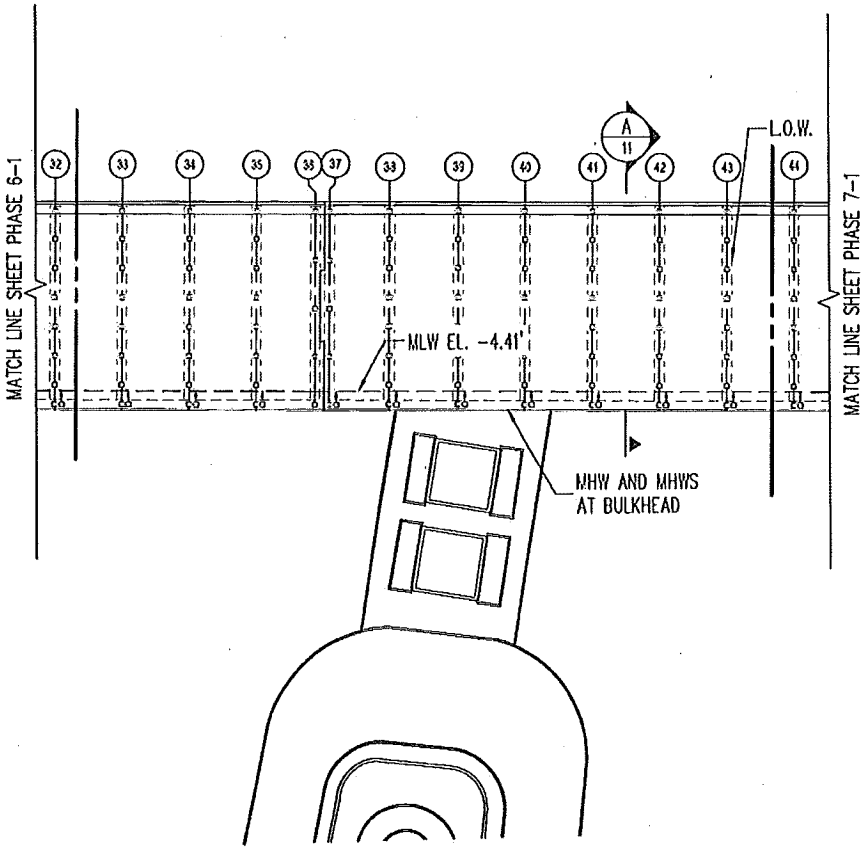

PHASE 6 - SHEET 2 OF 4

0 60' 120'

1"=60'

NOTE:
L.O.W. = LIMIT OF WORK

LEGEND:

- ▫ 20" x 20" SQUARE PRESTRESSED CONCRETE PILE
- ⍊ 20" x 20" SQUARE PRESTRESSED CONCRETE BATTER PILE

PURPOSE: ESPLANADE REPAIRS

DATUM: MHD

ADJACENT OWNERS:
SEE ATTACHED LIST.

BATTERY PARK CITY ESPLANADE
PILE REMEDIATION PROGRAM

APPLICANT: HUGH L. CAREY
BATTERY PARK CITY AUTHORITY
200 LIBERTY ST., 24TH FLOOR
NEW YORK, N.Y. 10281

AGENT: M.G. McLAREN, P.C.
100 SNAKE HILL ROAD
WEST NYACK, N.Y. 10994

2018 PHASE 6
SHEET 2 OF 4

IN: MANHATTAN, NY
AT: BATTERY PARK CITY
COUNTY OF: NEW YORK
STATE: NY

SHT 4 OF 15 03/30/2018

FILE NAME: P:\Proj140\140350 32\10_Dwgs\CAD\Battery Park Army Corp Permit\Plans of 2018 Phase 6.dwg PLOT TIME: Wed, 28 Mar 2018 - 9:52am LAST SAVE: Wed, 28 Mar 2018 - 9:51am BY: ecfu

JUL 18 2018

USACE FILE: NAN-2018-00504-ESW

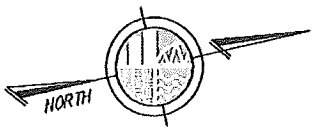

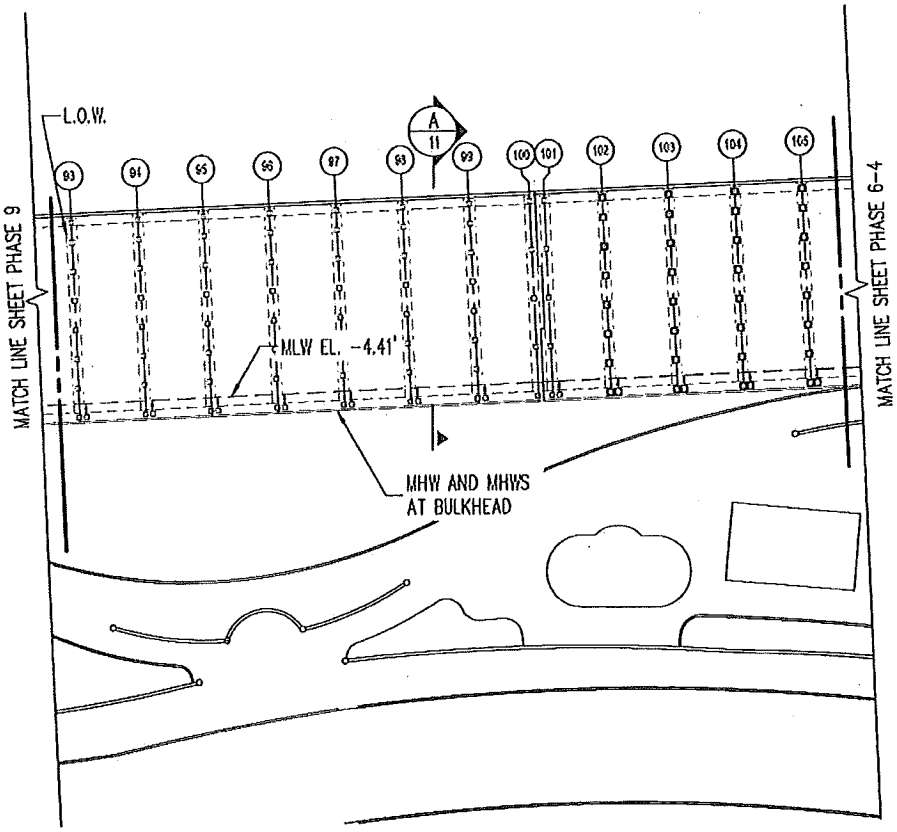

PHASE 6 - SHEET 3 OF 4

0 60' 120'

1"=60'

NOTE:
L.O.W. = LIMIT OF WORK

LEGEND:

- 20" x 20" SQUARE PRESTRESSED CONCRETE PILE
- 20" x 20" SQUARE PRESTRESSED CONCRETE BATTER PILE

PURPOSE: ESPLANADE REPAIRS DATUM: MHD ADJACENT OWNERS: SEE ATTACHED LIST.	BATTERY PARK CITY ESPLANADE PILE REMEDIATION PROGRAM APPLICANT: HUGH L. CAREY BATTERY PARK CITY AUTHORITY 200 LIBERTY ST., 24TH FLOOR NEW YORK, N.Y. 10281 AGENT: M.G. McLAREN, P.C. 100 SNAKE HILL ROAD WEST NYACK, N.Y. 10994	2018 PHASE 6 SHEET 3 OF 4 IN: MANHATTAN, NY AT: BATTERY PARK CITY COUNTY OF: NEW YORK STATE: NY SHT 3 OF 15 03/30/2018

FILE NAME: P:\Proj740\140950.32\10_Dwgs\CAD\Battery Park Army Corp Permit\Plans of 2018 Phase 6.dwg PLOT TIME: Wed, 28 Mar 2018 - 9:53am LAST SAVE: Wed, 28 Mar 2018 - 9:51am BY: echu

JUL 18 2018

USACE FILE: NAN-2018-00504-ESW

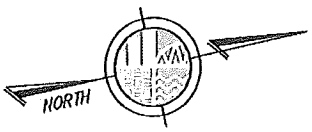

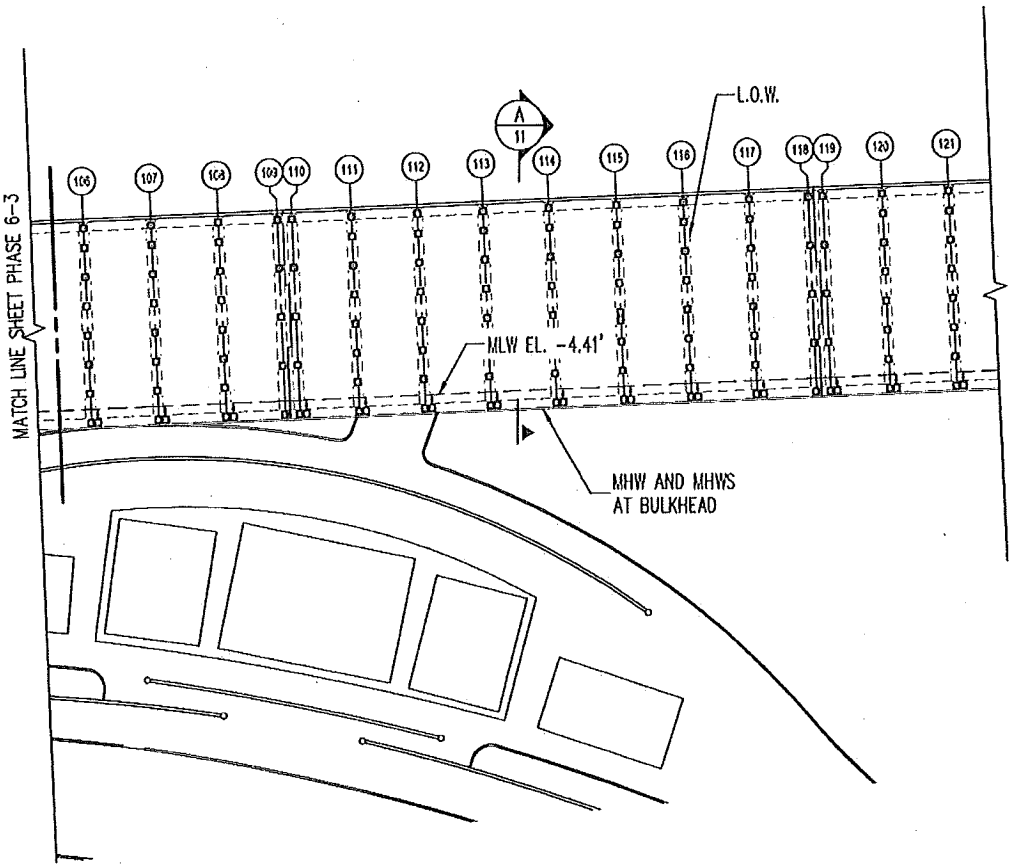

PHASE 6 - SHEET 4 OF 4

0 60' 120'

1"=60'

NOTE:
L.O.W. = LIMIT OF WORK

LEGEND:

- 20" x 20" SQUARE PRESTRESSED CONCRETE PILE
- 20" x 20" SQUARE PRESTRESSED CONCRETE BATTER PILE

PURPOSE: ESPLANADE REPAIRS DATUM: MHD DJACENT OWNERS: SEE ATTACHED LIST.	BATTERY PARK CITY ESPLANADE PILE REMEDIATION PROGRAM APPLICANT: HUGH L. CAREY BATTERY PARK CITY AUTHORITY 200 LIBERTY ST., 24TH FLOOR NEW YORK, N.Y. 10281 AGENT: M.G. McLAREN, P.C. 100 SNAKE HILL ROAD WEST NYACK, N.Y. 10994	2018 PHASE 6 SHEET 4 OF 4 IN: MANHATTAN, NY AT: BATTERY PARK CITY COUNTY OF: NEW YORK STATE: NY SHT 6 OF 15 03/30/2018

FILE NAME: P:\Proj\40\140950.32\10_Dsgn\CADD\Battery Park Army Corp Permit\Plans of 2018 Phase 6.dwg PLOT TIME: Wed, 28 Mar 2018 - 9:53am LAST SAVE: Wed, 28 Mar 2018 - 9:51am BY: ed'u

JUL 18 2018

USACE FILE: NAN-2018-00504-ESW

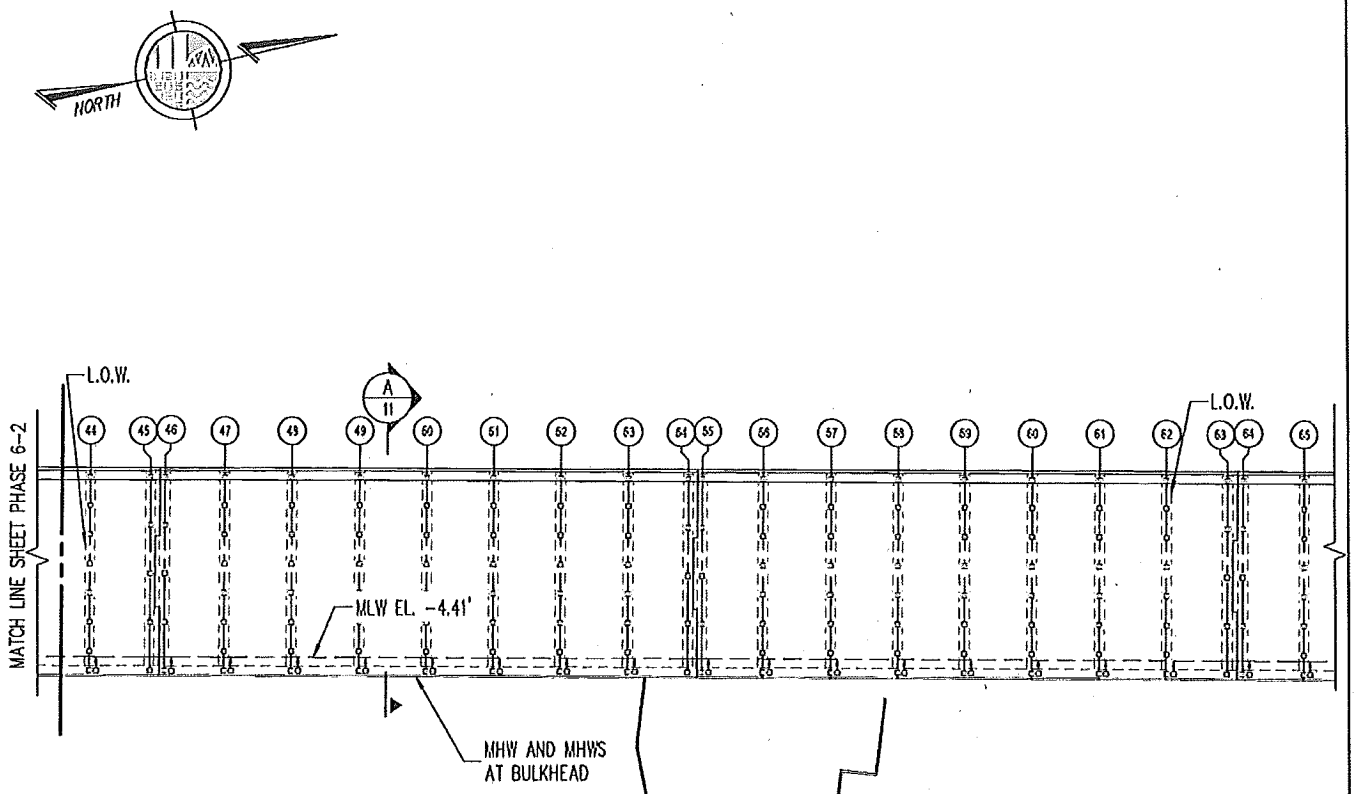

PHASE 7 - SHEET 1 OF 2

0 60' 120'

1"=60'

NOTE:
L.O.W. = LIMIT OF WORK

LEGEND:

- 20" x 20" SQUARE PRESTRESSED CONCRETE PILE
- 20" x 20" SQUARE PRESTRESSED CONCRETE BATTER PILE

PURPOSE: ESPLANADE REPAIRS

DATUM: MHD

DJACENT OWNERS:
SEE ATTACHED LIST.

BATTERY PARK CITY ESPLANADE
PILE REMEDIATION PROGRAM

APPLICANT: HUGH L. CAREY
BATTERY PARK CITY AUTHORITY
200 LIBERTY ST., 24TH FLOOR
NEW YORK, N.Y. 10281

AGENT: M.G. McLAREN, P.C.
100 SNAKE HILL ROAD
WEST NYACK, N.Y. 10994

2019 PHASE 7
SHEET 1 OF 2

IN: MANHATTAN, NY
AT: BATTERY PARK CITY
COUNTY OF: NEW YORK
STATE: NY

SHT 7 OF 15 03/30/2018

FILE NAME: P:\Proj140\140550.32\10_Dsgn\CADD\Battery Park Army Corp Permit\Plans of 2019 Phase 7.dwg PLOT TIME: Wed, 28 Mar 2018 - 9:55am LAST SAVE: Wed, 28 Mar 2018 - 9:20am BY: eahlu

JUL 18 2018

USACE FILE: NAN-2018-00504-ESW

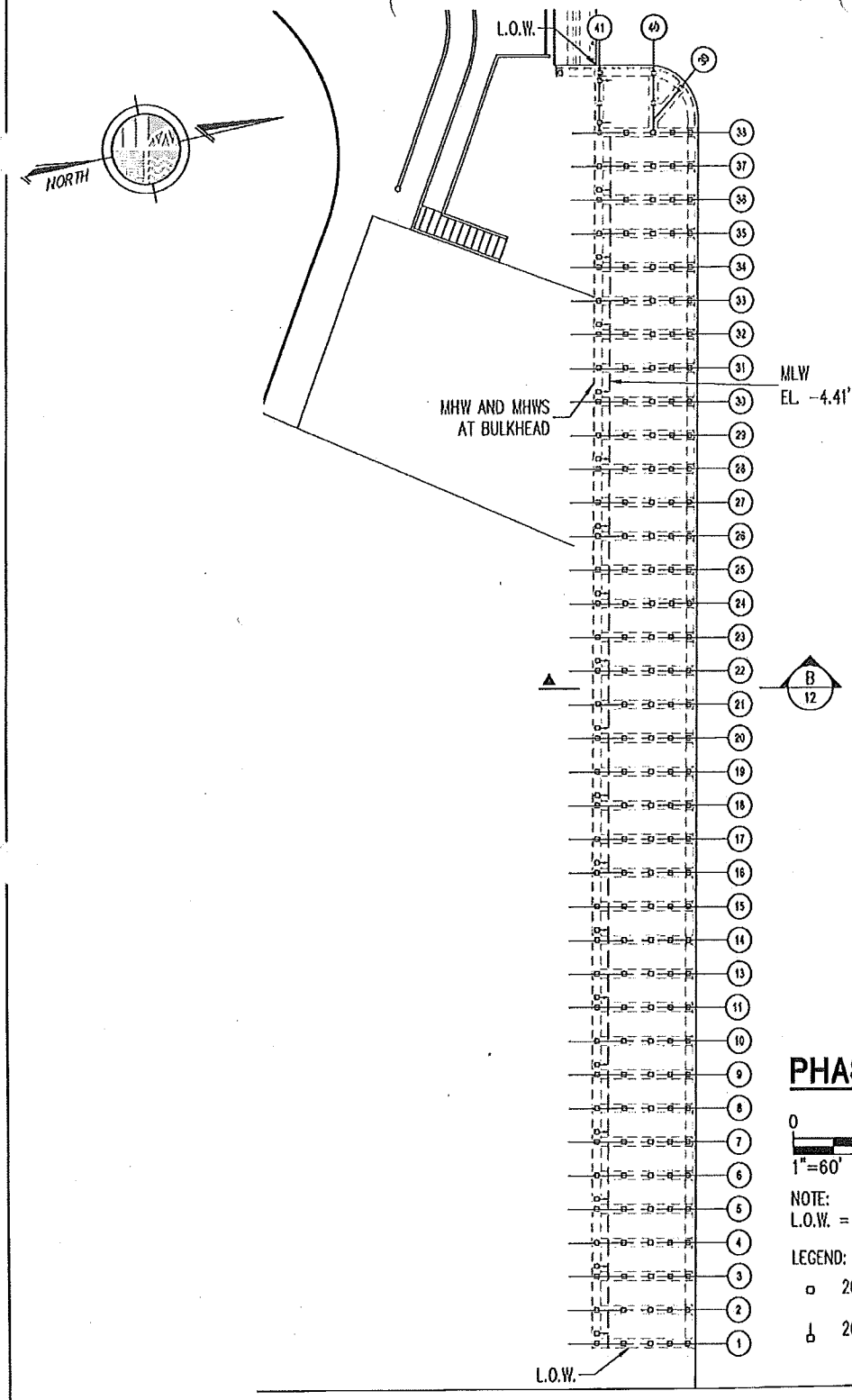

PHASE 7 - SHEET 2 OF 2

0 60' 120'

1"=60'

NOTE:
L.O.W. = LIMIT OF WORK

LEGEND:

- 20" x 20" SQUARE PRESTRESSED CONCRETE PILE
- 20" x 20" SQUARE PRESTRESSED CONCRETE BATTER PILE

PURPOSE: ESPLANADE REPAIRS

DATUM: MHD

DJACENT OWNERS:
SEE ATTACHED LIST.

BATTERY PARK CITY ESPLANADE
PILE REMEDIATION PROGRAM

APPLICANT: HUGH L. CAREY
BATTERY PARK CITY AUTHORITY
200 LIBERTY ST., 24TH FLOOR
NEW YORK, N.Y. 10281

AGENT: M.G. McLAREN, P.C.
100 SNAKE HILL ROAD
WEST NYACK, N.Y. 10994

2019 PHASE 7
SHEET 2 OF 2

IN: MANHATTAN, NY
AT: BATTERY PARK CITY
COUNTY OF: NEW YORK
STATE: NY

SHT 8 OF 15 03/30/2018

FILE NAME: P:\Proj\40\140550.32\10_Dsgn\CAD\Battery Park Army Corp Permit\Plans of 2019 Phase 7.dwg PLOT TIME: Wed, 28 Mar 2018 - 9:53am LAST SAVE: Wed, 28 Mar 2018 - 9:20am BY: edu

JUL 18 2018

USACE FILE: NAN-2018-00504-ESW

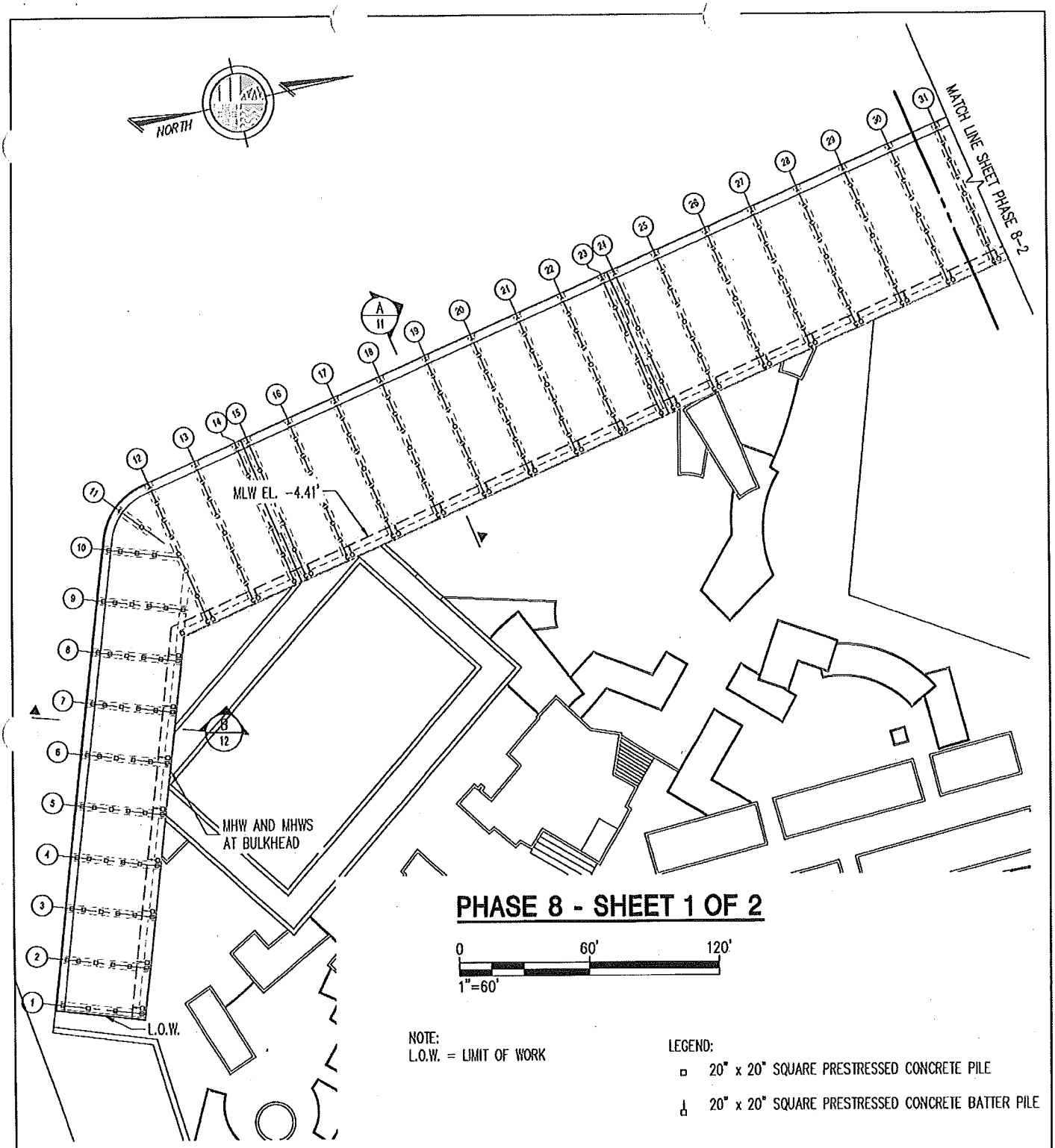

PURPOSE: ESPLANADE REPAIRS DATUM: MHD DJACENT OWNERS: SEE ATTACHED LIST.	BATTERY PARK CITY ESPLANADE PILE REMEDIATION PROGRAM APPLICANT: HUGH L. CAREY BATTERY PARK CITY AUTHORITY 200 LIBERTY ST., 24TH FLOOR NEW YORK, N.Y. 10281 AGENT: M.G. McLAREN, P.C. 100 SNAKE HILL ROAD WEST NYACK, N.Y. 10994	2020 PHASE 8 SHEET 1 OF 2 IN: MANHATTAN, NY AT: BATTERY PARK CITY COUNTY OF: NEW YORK STATE: NY SHT 9 OF 15 03/30/2018

FILE NAME: P:\Proj140\140550.32\10_Dwgs\CADD\Battery Park Army Corp Permit\Plans of 2020 Phase 8.dwg PLOT TIME: Wed, 28 Mar 2018 – 9:53am LAST SAVE: Wed, 28 Mar 2018 – 9:21am BY: eshu

JUL 18 2018

USACE FILE: NAN-2018-00504-ESW

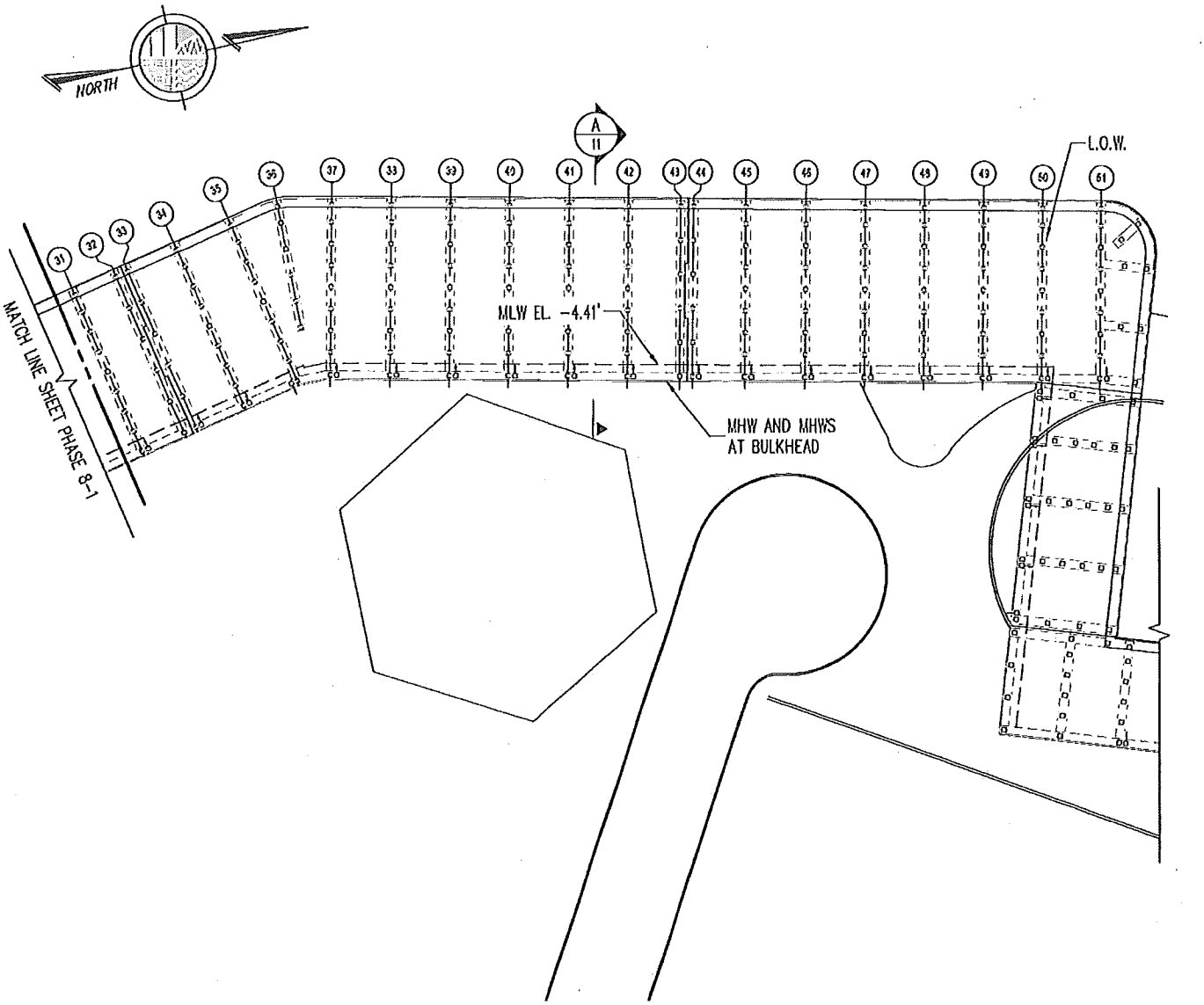

PHASE 8 - SHEET 2 OF 2

0 60' 120'

1"=60'

NOTE:
L.O.W. = LIMIT OF WORK

LEGEND:

- 20" x 20" SQUARE PRESTRESSED CONCRETE PILE
- 20" x 20" SQUARE PRESTRESSED CONCRETE BATTER PILE

PURPOSE: ESPLANADE REPAIRS DATUM: MHD DJACENT OWNERS: SEE ATTACHED LIST.	BATTERY PARK CITY ESPLANADE PILE REMEDIATION PROGRAM APPLICANT: HUGH L. CAREY BATTERY PARK CITY AUTHORITY 200 LIBERTY ST., 24TH FLOOR NEW YORK, N.Y. 10281 AGENT: M.G. McLAREN, P.C. 100 SNAKE HILL ROAD WEST NYACK, N.Y. 10994	2020 PHASE 8 SHEET 1 OF 2 IN: MANHATTAN, NY AT: BATTERY PARK CITY COUNTY OF: NEW YORK STATE: NY SHT 10 OF 15 03/30/2018

FILE NAME: P:\Proj\40\140950.32\10_Dwgs\CAD\Battery Park Army Corp Permit\Plans of 2020 Phase 8.dwg PLOT TIME: Wed, 28 Mar 2018 - 9:55am LAST SAVE: Wed, 28 Mar 2018 - 9:21am BY: echu

JUL 18 2018

USACE FILE: NAN-2018-00504-ESW

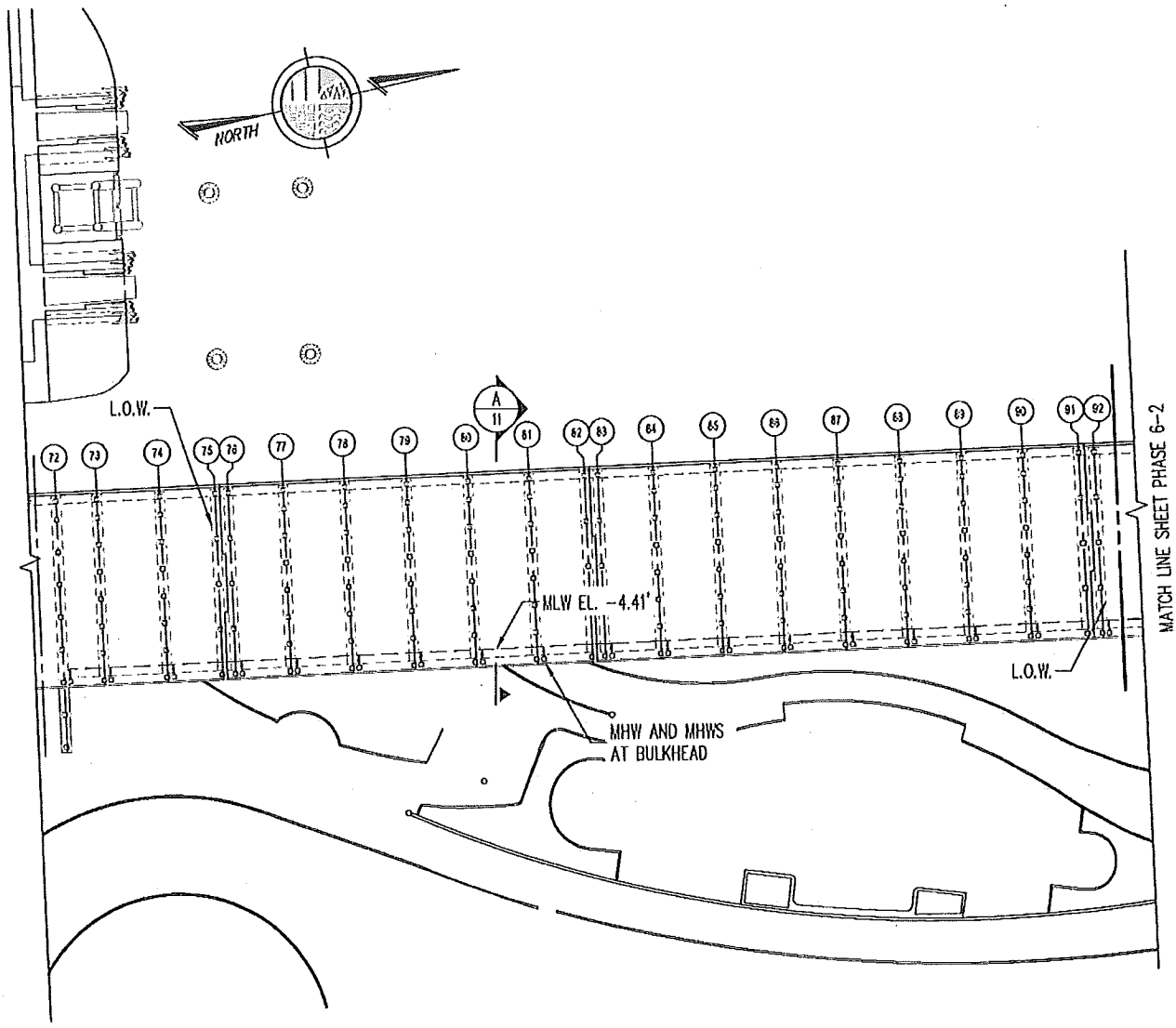

PHASE 9

0 60' 120'

1"=60'

NOTE:
L.O.W. = LIMIT OF WORK

LEGEND:

- 20" x 20" SQUARE PRESTRESSED CONCRETE PILE
- 20" x 20" SQUARE PRESTRESSED CONCRETE BATTER PILE

PURPOSE: ESPLANADE REPAIRS

DATUM: MHD

ADJACENT OWNERS:
SEE ATTACHED LIST.

BATTERY PARK CITY ESPLANADE
PILE REMEDIATION PROGRAM

APPLICANT: HUGH L. CAREY
BATTERY PARK CITY AUTHORITY
200 LIBERTY ST., 24TH FLOOR
NEW YORK, N.Y. 10281

AGENT: M.G. McLAREN, P.C.
100 SNAKE HILL ROAD
WEST NYACK, N.Y. 10994

2021 PHASE 9

IN: MANHATTAN, NY
AT: BATTERY PARK CITY
COUNTY OF: NEW YORK
STATE: NY

SHT 11 OF 15 03/30/2018

FILE NAME: P:\Proj\140\140550.32\10_Dwgs\CADD\Battery Park Army Corp Permit\Plans of 2021 Phase 9.dwg PLOT TIME: Wed, 28 Mar 2018 - 9:53am LAST SAVE: Wed, 28 Mar 2018 - 9:21am BY: eshu

JUL 18 2018

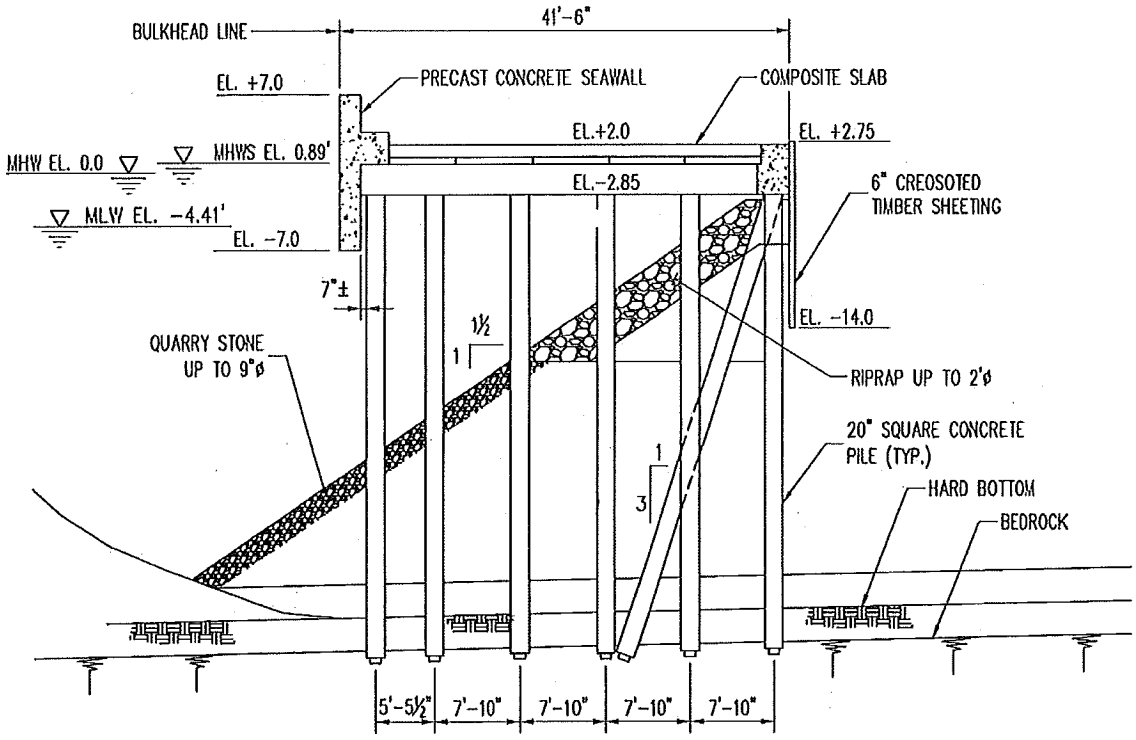

B / 15 TYPICAL EXISTING ESPLANADE SECTION

0 16' 32'

1/16"=1'-0"

NOTE:
SUBSURFACE PROFILE TAKEN FROM AS-BUILT "BATTERY PARK CITY" DRAWINGS DEVELOPED BY MUESER, RUTLEDGE, WENTWORTH, AND JOHNSTON CONSULTING ENGINEERS, DATED JUNE 17, 1974.

PURPOSE: ESPLANADE REPAIRS DATUM: MHD DJACENT OWNERS: SEE ATTACHED LIST.	BATTERY PARK CITY ESPLANADE PILE REMEDIATION PROGRAM APPLICANT: HUGH L. CAREY BATTERY PARK CITY AUTHORITY 200 LIBERTY ST., 24TH FLOOR NEW YORK, N.Y. 10281 AGENT: M.G. McLAREN, P.C. 100 SNAKE HILL ROAD WEST NYACK, N.Y. 10994	TYPICAL EXISTING ESPLANADE SECTIONS 2 IN: MANHATTAN, NY AT: BATTERY PARK CITY COUNTY OF: NEW YORK STATE: NY SHT 13 OF 15 03/30/2018

FILE NAME: P:\Proj140\140350 32\10_Dsgn\CADD\Battery Park Army Corp Permit\Existing Esplanade Section-2.dwg PLOT TIME: Wed, 28 Mar 2018 - 9:53am LAST SAVE: Wed, 28 Mar 2018 - 9:11am BY: ejh

JUL 18 2018

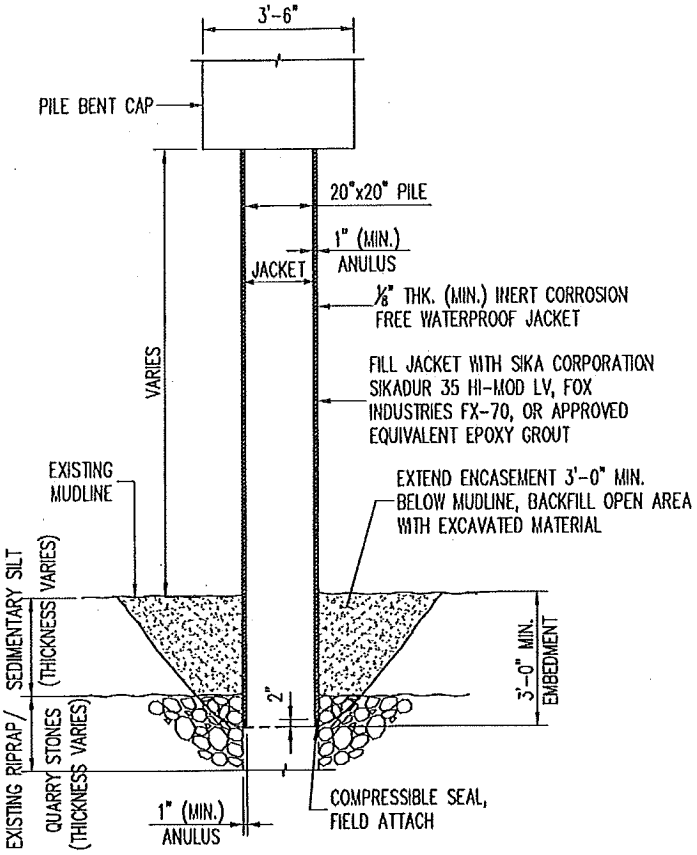

ELEVATION
1/4"=1'-0"

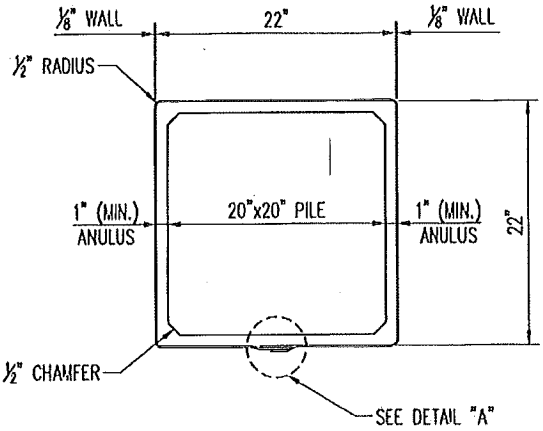

PLAN
3/4"=1'-0"

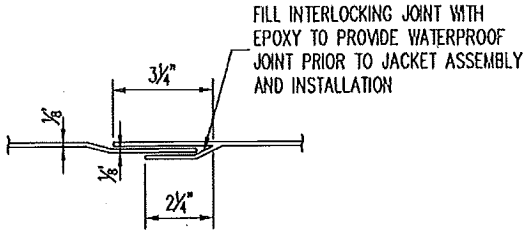

DETAIL "A"
N.T.S.

EXPOXY GROUT PILE PROTECTION DETAILS

(SQUARE JACKET)

0 4' 8'
1/4"=1'-0"

PURPOSE: ESPLANADE REPAIRS DATUM: MHD DJACENT OWNERS: SEE ATTACHED LIST.	BATTERY PARK CITY ESPLANADE PILE REMEDIATION PROGRAM APPLICANT: HUGH L. CAREY BATTERY PARK CITY AUTHORITY 200 LIBERTY ST., 24TH FLOOR NEW YORK, N.Y. 10281 AGENT: M.G. McLAREN, P.C. 100 SNAKE HILL ROAD WEST NYACK, N.Y. 10994	EPOXY GROUT PILE PROTECTION IN: MANHATTAN, NY AT: BATTERY PARK CITY COUNTY OF: NEW YORK STATE: NY SHT 14 OF 15 03/30/2018

FILE NAME: P:\Proj140\140550.32\10_Dwgs\CADD\Battery Park Army Corp Permit\Epoxy Grout Pile Protection.dwg PLOT TIME: Wed, 28 Mar 2018 - 9:53am LAST SAVE: Wed, 28 Mar 2018 - 9:11am BY: mhu

JUL 18 2018

USACE FILE: NAN-2018-00504-ESW

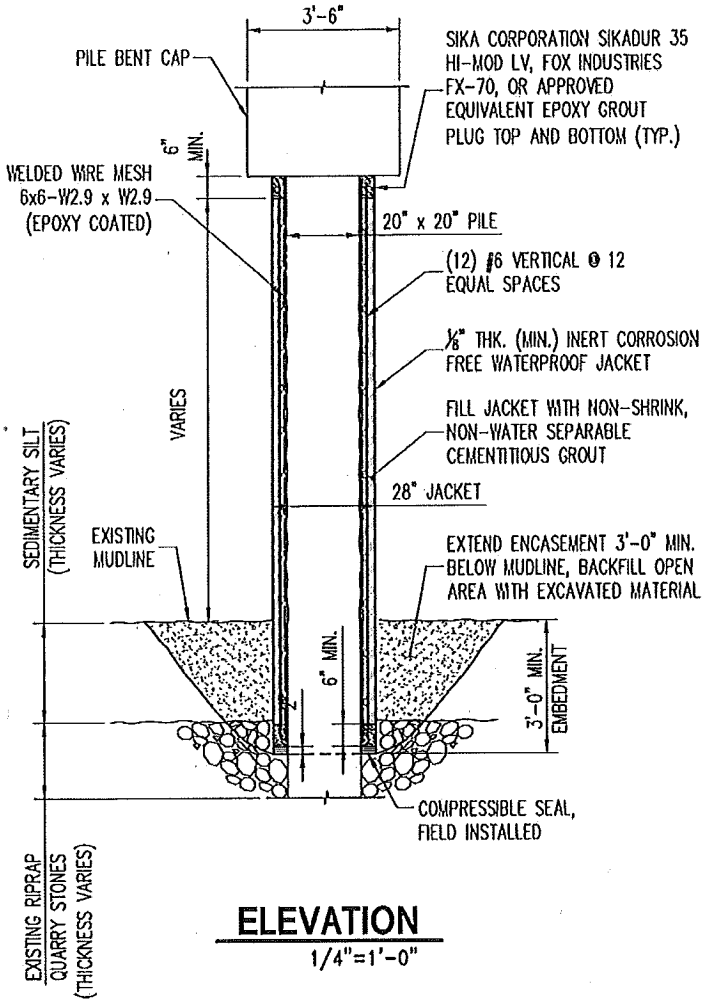

ELEVATION
1/4"=1'-0"

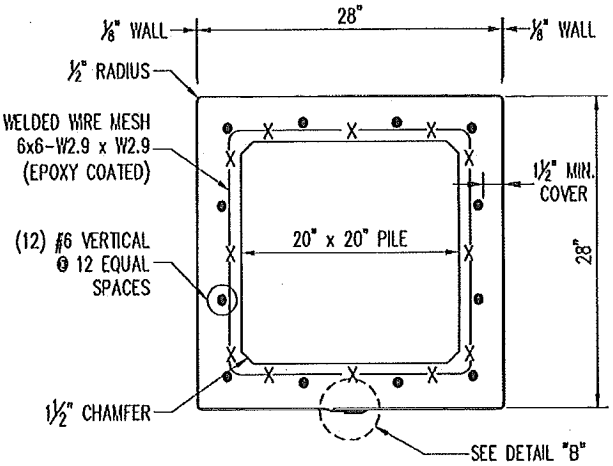

PLAN
3/4"=1'-0"

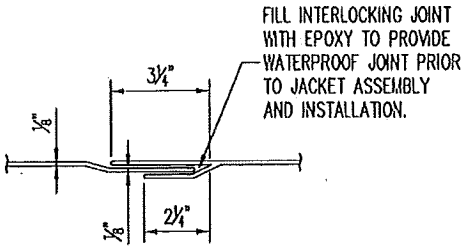

DETAIL "B"
N.T.S.

CONCRETE PILE STRUCTURAL REPAIR DETAILS

(SQUARE JACKET)

0 4' 8'
1/4"=1'-0"

PURPOSE: ESPLANADE REPAIRS DATUM: MHD DJACENT OWNERS: SEE ATTACHED LIST.	BATTERY PARK CITY ESPLANADE PILE REMEDIATION PROGRAM APPLICANT: HUGH L. CAREY BATTERY PARK CITY AUTHORITY 200 LIBERTY ST., 24TH FLOOR NEW YORK, N.Y. 10281 AGENT: M.G. McLAREN, P.C. 100 SNAKE HILL ROAD WEST NYACK, N.Y. 10994	CONCRETE PILE STRUCTURAL REPAIR DETAIL IN: MANHATTAN, NY AT: BATTERY PARK CITY COUNTY OF: NEW YORK STATE: NY SHT 15 OF 15 03/30/2018

FILE NAME: P:\Proj140\140650.32\10_Dwgs\CAD0\Battery Park Army Corp Permit\Concrete Pile Struc Repair Detail.dwg PLOT TIME: Wed, 28 Mar 2018 - 9:53am LAST SAVE: Wed, 28 Mar 2018 - 9:11am BY: ebu

JUL 18 2018

Appendix 2 - PRELIMINARY JURISDICTIONAL DETERMINATION (PJD) FORM

BACKGROUND INFORMATION

A. REPORT COMPLETION DATE FOR PJD: July 16, 2018

B. NAME AND ADDRESS OF PERSON REQUESTING PJD: BPCA 200 Liberty Street, 24th Floor New York, New York 10281

C. DISTRICT OFFICE, FILE NAME, AND NUMBER: NY District, Battery Park City Authority, NAN-2018-00504-ESW

D. PROJECT LOCATION(S) AND BACKGROUND INFORMATION:
(USE THE TABLE BELOW TO DOCUMENT MULTIPLE AQUATIC RESOURCES AND/OR AQUATIC RESOURCES AT DIFFERENT SITES)

State: New York County/parish/borough: Manhattan City: New York

Center coordinates of site (lat/long in degree decimal format):

Lat.: 40.71344167 Long.: -74.0162084

Universal Transverse Mercator:

Name of nearest waterbody: Hudson River

E. REVIEW PERFORMED FOR SITE EVALUATION (CHECK ALL THAT APPLY):

☒ Office (Desk) Determination. Date: July 16, 2018

☐ Field Determination. Date(s):

TABLE OF AQUATIC RESOURCES IN REVIEW AREA WHICH "MAY BE" SUBJECT TO REGULATORY JURISDICTION.

Site number	Latitude (decimal degrees)	Longitude (decimal degrees)	Estimated amount of aquatic resource in review area (acreage and linear feet, if applicable)	Type of aquatic resource (i.e., wetland vs. non-wetland waters)	Geographic authority to which the aquatic resource "may be" subject (i.e., Section 404 or Section 10/404)
1	40.71344167	-74.0162084	2 acres	non-wetland waters	10/404

1) The Corps of Engineers believes that there may be jurisdictional aquatic resources in the review area, and the requestor of this PJD is hereby advised of his or her option to request and obtain an approved JD (AJD) for that review area based on an informed decision after having discussed the various types of JDs and their characteristics and circumstances when they may be appropriate.

2) In any circumstance where a permit applicant obtains an individual permit, or a Nationwide General Permit (NWP) or other general permit verification requiring "pre-construction notification" (PCN), or requests verification for a non-reporting NWP or other general permit, and the permit applicant has not requested an AJD for the activity, the permit applicant is hereby made aware that: (1) the permit applicant has elected to seek a permit authorization based on a PJD, which does not make an official determination of jurisdictional aquatic resources; (2) the applicant has the option to request an AJD before accepting the terms and conditions of the permit authorization, and that basing a permit authorization on an AJD could possibly result in less compensatory mitigation being required or different special conditions; (3) the applicant has the right to request an individual permit rather than accepting the terms and conditions of the NWP or other general permit authorization; (4) the applicant can accept a permit authorization and thereby agree to comply with all the terms and conditions of that permit, including whatever mitigation requirements the Corps has determined to be necessary; (5) undertaking any activity in reliance upon the subject permit authorization without requesting an AJD constitutes the applicant's acceptance of the use of the PJD; (6) accepting a permit authorization (e.g., signing a proffered individual permit) or undertaking any activity in reliance on any form of Corps permit authorization based on a PJD constitutes agreement that all aquatic resources in the review area affected in any way by that activity will be treated as jurisdictional, and waives any challenge to such jurisdiction in any administrative or judicial compliance or enforcement action, or in any administrative appeal or in any Federal court; and (7) whether the applicant elects to use either an AJD or a PJD, the JD will be processed as soon as practicable. Further, an AJD, a proffered individual permit (and all terms and conditions contained therein), or individual permit denial can be administratively appealed pursuant to 33 C.F.R. Part 331. If, during an administrative appeal, it becomes appropriate to make an official determination whether geographic jurisdiction exists over aquatic resources in the review area, or to provide an official delineation of jurisdictional aquatic resources in the review area, the Corps will provide an AJD to accomplish that result, as soon as is practicable. This PJD finds that there *"may be"* waters of the U.S. and/or that there *"may be"* navigable waters of the U.S. on the subject review area, and identifies all aquatic features in the review area that could be affected by the proposed activity, based on the following information:

SUPPORTING DATA. Data reviewed for PJD (check all that apply)

Checked items should be included in subject file. Appropriately reference sources below where indicated for all checked items:

- [x] Maps, plans, plots or plat submitted by or on behalf of the PJD requestor:
  Map: McLaren Engineering Group, dated March 30, 2018.
- [ ] Data sheets prepared/submitted by or on behalf of the PJD requestor.
  - [ ] Office concurs with data sheets/delineation report.
  - [ ] Office does not concur with data sheets/delineation report. Rationale: _____.
- [ ] Data sheets prepared by the Corps: _____.
- [ ] Corps navigable waters' study: _____.
- [ ] U.S. Geological Survey Hydrologic Atlas: _____.
  - [ ] USGS NHD data.
  - [ ] USGS 8 and 12 digit HUC maps.
- [ ] U.S. Geological Survey map(s). Cite scale & quad name: _____.
- [ ] Natural Resources Conservation Service Soil Survey. Citation: _____.
- [ ] National wetlands inventory map(s). Cite name: _____.
- [ ] State/local wetland inventory map(s): _____.
- [ ] FEMA/FIRM maps: _____.
- [ ] 100-year Floodplain Elevation is: _____.(National Geodetic Vertical Datum of 1929)
- [x] Photographs: [x] Aerial (Name & Date): _____.
  or [x] Other (Name & Date): Existing conditions, April 2018.
- [ ] Previous determination(s). File no. and date of response letter: _____.
- [x] Other information (please specify): Environmental Questionnaire, FCAF.

IMPORTANT NOTE: The information recorded on this form has not necessarily been verified by the Corps and should not be relied upon for later jurisdictional determinations.

REGAN.AMANDA.MICHELLE.1384973287 Digitally signed by REGAN.AMANDA.MICHELLE.1384973287 DN: c=US, o=U.S. Government, ou=DoD, ou=PKI, ou=USA, cn=REGAN.AMANDA.MICHELLE.1384973287 Date: 2018.07.16 14:43:37 -04'00'

Signature and date of Regulatory staff member completing PJD

Signature and date of person requesting PJD (REQUIRED, unless obtaining the signature is impracticable)[1]

[1] Districts may establish timeframes for requestor to return signed PJD forms. If the requestor does not respond within the established time frame, the district may presume concurrence and no additional follow up is necessary prior to finalizing an action.

New York State Department of Environmental Conservation
Division of Environmental Permits, Region 2
47-40 21ST Street, Long Island City, NY 11101-5407
Phone: (718) 482-4997 • **Fax:** (718) 482-4975
Website: www.dec.ny.gov

Joe Martens
Commissioner

January 9, 2015

John D. Francescon
Hatch Mott MacDonald
1400 Broadway, 30th Floor
New York, NY 10018

Re: DEC Permit No. 2-6200-00782/00001
Battery Park City Authority – General Permit for Waterfront Structure Repair
ECL Article 15 – Protection of Waters
ECL Article 25 – Tidal Wetlands
6 NYCRR Part 608 – Water Quality Certification
NOTICE OF PERMIT ISSUANCE

Dear Mr. Francescon:

Enclosed is your client's NYSDEC permit. Please have your client read it carefully, and ask its contractors to do the same. Compliance with all permit conditions is required.

If you have any questions, please call me at the number above, or e-mail me at john.cryan@dec.ny.gov .

Very truly yours,

John F. Cryan
Regional Permit Administrator

encl.

PERMIT

Under the Environmental Conservation Law (ECL)

Permittee and Facility Information

Permit Issued To:
BATTERY PARK CITY AUTHORITY

24TH FL

1 WORLD FINANCIAL CTR
NEW YORK, NY 10281
(212) 417-2000

Facility:
BATTERY PARK CITY WATERFRONT (ONLY)
HUDSON RIVER BETWEEN BATTERY PL ON THE S AND CHAMBERS ST ON THE N
NEW YORK, NY 10280

Facility Location: in NEW YORK COUNTY **Village:** New York City
Facility Principal Reference Point: NYTM-E: NYTM-N:
Latitude: Longitude:
Project Location: Battery Park City waterfront
Authorized Activity: Maintenance of Battery Park City Authority-owned , legal waterfront structures, or elements thereof, as defined in the special conditions of this permit, by the Battery Park City Authority within lower Manhattan along the Hudson River between Chambers Street and Battery Place.

Permit Authorizations

Excavation & Fill in Navigable Waters - Under Article 15, Title 5
Permit ID 2-6200-00782/00001
New Permit Effective Date: 1/9/2015 Expiration Date: 1/8/2025
Water Quality Certification - Under Section 401 - Clean Water Act
Permit ID 2-6200-00782/00002
New Permit Effective Date: 1/9/2015 Expiration Date: 1/8/2025
Tidal Wetlands - Under Article 25
Permit ID 2-6200-00782/00003
New Permit Effective Date: 1/9/2015 Expiration Date: 1/8/2025

NYSDEC Approval

By acceptance of this permit, the permittee agrees that the permit is contingent upon strict compliance with the ECL, all applicable regulations, and all conditions included as part of this permit.

Permit Administrator: JOHN F CRYAN, Regional Permit Administrator
Address: NYSDEC REGION 2 HEADQUARTERS
47-40 21ST ST
LONG ISLAND CITY, NY 11101 -5407

Authorized Signature: John J. Cryan Date 01/09/2015

Permit Components

NATURAL RESOURCE PERMIT CONDITIONS

WATER QUALITY CERTIFICATION SPECIFIC CONDITION

GENERAL CONDITIONS, APPLY TO ALL AUTHORIZED PERMITS

NOTIFICATION OF OTHER PERMITTEE OBLIGATIONS

NATURAL RESOURCE PERMIT CONDITIONS - Apply to the Following Permits: EXCAVATION & FILL IN NAVIGABLE WATERS; WATER QUALITY CERTIFICATION; TIDAL WETLANDS

1. **Conformance With Plans** All activities authorized by this permit must be in strict conformance with the approved plans submitted by the applicant or applicant's agent as part of the permit application. Such approved plans were prepared by Hatch Mott McDonald for Battery Park City Authority, and consist of an overall site plan dated 6/10/2014, and also additional plans to be submitted for each round of work under this special general permit (see special condition 5)..

2. **Scope of General Permit** Maintenance of legal waterfront structures, or elements thereof, owned by Battery Park City Authority.

-Piers, wharves, bulkheads, bridge piers, bridge/pier protection cells, ferry landing structures, and stone revetments involving the following elements:

-Piles (wood*, concrete, steel, concrete filled steel);
-Pile caps;
-Beams, fenders and walers;
-Decking;
-Gravity walls;
-Timber, vinyl or steel sheet pile bulkheads** (in-place reconstruction only)
-Relieving platforms;
-Cribbing;
-Spalled concrete surfaces (repair to be application of shotcrete or other method of pneumatically applied concrete or formed with cast-in-place concrete);
-Cathodic protection of metal surfaces;
-Storm water outfall(s) and tide gates - limited to in-place repair or replacement of an outfall(s) or tide gate due to deterioration or to maintenance of the waterfront structure of which it is a part;
-Repair or replacement of legal marine habitat enhancement structures (ie. reef balls, etc.) in-place due to deterioration or due to maintenance of the waterfront structure of which it is a part;
-Repair, replacement or relocation of impervious or pervious service roads located greater than thirty (30) feet landward of the tidal wetland boundary;

-In-place repair or replacement of boat ramps (for security and emergency use only with no asphalt) due to deterioration or due to maintenance of the waterfront structure of which it is a part;
-Aids to navigation - prior approval by and installed in accordance with the requirements of the U.S. Coast Guard.

*including wrapping of timber piles with plastic sheeting (a maximum increase of 6 inches in diameter) to prevent or minimize deterioration (including manual side casting and replacement of sediment at the base of pile to facilitate placement of sheeting below the mudline).

*concrete jacketing/encasement (limited to initial jackets/encasements with a maximum 8 inch increase in diameter) of damaged or deteriorated piles (also including manual side casting and replacement of sediment at the base of pile to facilitate placement of sheeting below the mud-line). Second generation jackets/encasements are not covered under the scope of this permit.

**excavation of incidental obstructions (rip rap, fill material, debris) from the base of deteriorated piles, bulkhead or other deteriorated retaining structures sections to facilitate maintenance work.

**replacement of rip rap provided it be underlain it with geo-textile fabric at base of repaired and/or reconstructed bulkhead sections or under or adjacent to piers and wharves to re-establish structural stability.

3. **Definitions a) Maintenance:** The repair or in-place replacement of any functional waterfront structure provided that the structure is not to be put to uses differing from lawfully allowed past uses or from those specified in prior permits. Minor deviations in the structure's configuration or filled area including those due to changes in materials, construction techniques, or current construction codes or safety standards which are necessary to make repair or replacement are permitted, provided the environmental impacts resulting from such repair are not significant.

b) Incidental: Occuring merely by chance or without intention or calculation, with minor consequence.

c) Minimal Impacts: Those that are consistent with a SEQR finding of no significant impacts.

d) Minor Deviations: Those changes to the in-place characteristics of the structure that are consistent with a SEQR finding of no significant impacts; 6 NYCRR Part 661.5 use catergory of GCP (generally compatible use-permit required); and applicable development restrictions contained in 6 NYCRR Part 661.6.

e) Repair: To bring back to or put back into a former or original state, including replacement in part or whole.

f) Replacement: The filling of a place once occupied by something lost, destroyed, deteriorated, or no longer usable or adequate.

g) Shotcrete: A quick setting mortar or concrete mix pneumatically conveyed through a hose and applied directly to vertical and overhead surfaces, being capable of supporting itself without sagging or sloughing: suitable for repair work and new construction.

4. **Regulated Activities Authorized by this Permit** This permit authorizes only those regulated

activities/structures identified in Natural Resources Permit Condition 2. NYSDEC does not issue after-the-fact or as-built permits. This permit does not authorize activities, or legitimize the existence of structures, which would have required a permit but for which no permit or other authorization has been granted by NYSDEC.

5. **Notification to DEC and Authorization to Proceed Required** For each project contemplated under this permit, the permittee shall follow the procedure below:

Not less than fifteen (15) days prior to the start of work, Battery Park City Authority must provide one copy of the following items to: NYSDEC Division of Environmental Permits, 47-40 21st Street, Long Island City, New York 11101 (Attention: Regional Permit Administrator) and one copy of the following to: NYSDEC Bureau of Marine Resources, 47-40 21st Street, Long Island City, New York 11101 (Attention: Marine Resources Program Manager).

a. Project Description

b. Work Schedule

c. Current color photographs showing the entire project site at low tide, including photo location/direction labeling plan.

d. Construction equipment to be used.

e. Project plans to scale which include the following:

1) Sediment/erosion controls methods/locations if any sediment/vegetation disturbance or fill placement is proposed.
2) Tidal wetland boundary, mean high water and mean low water line locations and elevations referenced to NAD 88.
3) Staging locations for storage of construction equipment/materials.
4) Temporary or permanent project limiting fence.
5) Access route for construction equipment
6) Type(s) and volume(s) and source(s) of fill to be used if applicable
7) North arrow
8) Property lines and names of adjacent landowners
9) Dimensions of the work areas and limits of disturbance
10) Name of preparer and date prepared
11) Type(s) and dimensions (in feet/inches) of material proposed
12) Existing and proposed grades
13) Dimensions/weights (in pounds) and amount(s) (in cubic yards) of rock rip rap if applicable.

Permittee shall not commence work until DEC has issued to permittee a written authorization to proceed with the work described in the documents listed above that permittee has submitted to DEC.

6. **Notice of Intent to Commence Work** At least 15 days prior to commencement of work, Permitte must complete and return the attached Notice of Intent to Commence Work to: NYSDEC Marine Resources, 47-40 21st Street, Long Island City, New York 11101 (Attention: Marine Resources Program

Manager). Such form may be included with the materials submitted as described in the previous special condition, Special Condition No. 5, above.

7. **Post Permit Sign** The permit sign enclosed with this permit shall be posted in a conspicuous location on the worksite and adequately protected from the weather.

8. **Post Construction Photographs** Within 30 days of the completion of work authorized by this permit, Permittee must submit post-construction photographs of the work area to: NYSDEC Bureau of Marine Resources, 47-40 21st Street, Long Island City, New York 11101 (Attention: Marine Resources Program Manager).

9. **Best Management Practices** Best management practices must be employed to prevent the loss of construction materials, debris and sediments from entering the wetlands or waterways. Such practices may include, but are not limited to, construction fencing, staked hay bales, silt fencing, floating platforms, netting, containment booms.

10. **Precautions Against Contamination of Waters** All necessary precautions shall be taken to preclude contamination of any wetland or waterway by suspended solids, sediments, fuels, solvents, lubricants, epoxy coatings, paints, concrete, leachate or any other environmentally deleterious materials associated with the project.

11. **Concrete/Leachate Discharges Prohibited** During construction, concrete or leachate must not escape or be discharged, and washings from transit mix trucks, mixers, or other devices must not enter tidal wetlands or protected buffer areas or waterways.

12. **Storage of Construction Equipment and Materials** The storage of construction equipment and newly delivered construction materials must be confined to within the project work site and upland areas greater than 50 linear feet from the tidal wetland boundary.

13. **Excavation for Bulkhead/Structure** Prior to any construction or removal of bulkheads and other shoreline stabilization structures all backfill shall be excavated landward of the structure and retained so as not to enter the waterway, tidal wetland or protected buffer area.

14. **Complete Construction Before Backfilling** Construction of all peripheral riprap berms, cofferdams, rock revetment, gabions, bulkheads, etc., shall be completed prior to placement of any fill material behind such structures.

15. **Clean Fill Material Only** All fill material must consist of "clean" sand, gravel, or soil. The use of material such as asphalt, slag, fly-ash, broken concrete, recycled concrete aggregate or demolition debris is strictly prohibited.

16. **Installation of Pilings** All pilings must be driven in place. The jetting of pilings is prohibited.

17. **No Disturbance to Vegetated Tidal Wetlands is allowed.** There will be no disturbance to vegetated tidal wetlands or tidal wetlands adjacent area protected buffer areas as a result of the permitted activity.

18. **No Floats, Ramps in Vegetated Tidal Wetlands** Floats and ramps may not rest on or be stored in any vegetated tidal wetland.

19. **Debris Removal** Should any demolition or construction debris fall into the waterway or enter the tidal wetlands, it must be removed immediately.

20. **Debris Disposal** All demolition and construction debris must be properly disposed of at a facility permitted to accept such materials.

21. **De-Watering Prohibited** De-watering is prohibited without prior written approval from NYSDEC.

22. **No Construction Debris in Wetland or Adjacent Area** Debris from the construction project permitted herein, and any excess construction materials, may not enter or be stored within regulated wetlands or adjacent areas. Such debris must be removed on a daily basis from the project site, and such excess materials must be removed before the end of construction.

23. **In-Water Use of Wood Preservatives** A. Pressure treated wood used for construction of in-water structures must have been treated with a preservative and must have undergone a treatment process approved (stamped or otherwise marked as certified) by the American Wood Preservative Association.

B. Wood treated with Pentachlorophenol (PCP) must not be used in wetlands or surface waters.

C1. [Existing Marinas]
Wood treated with creosote may only be used until January 1, 2010.

Any unused creosote treated wood must be disposed of in accordance with section 27-2505 of the Environmental Conservation Law at a specially authorized facility. The burning of creosote treated wood is strictly prohibited.

C2. [New Marinas]
The use of creosote treated wood is prohibited both in the water and in the upland areas.

D. Chromated Copper Arsenate (CCA) pressure treated wood must be clean and free of CCA surface deposits. Wood with surface deposits must be washed for at least 5 minutes under running water prior to use. (Note the following condition for the handling of wash water.)

E. Any wood debris such as sawdust or wash water must not enter any water body, including wetlands, or protected buffer areas.

24. **Stabilize Disturbed Areas** All areas of soil disturbance resulting from this project shall be stabilized immediately following project completion or prior to permit expiration, whichever comes first. The approved methodologies are as follows:

a. Stabilization of the entire disturbed area with appropriate vegetation (grasses, etc.).

b. Stabilized as per specifications identified on approved plans.

c. Temporarily stabilized with straw mulch or jute matting or other similar natural fiber matting within 1 week of final grading. Temporary stabilization shall be maintained until a mature vegetative cover is established.

25. **Minimize Adverse Impacts to Wetlands, Wildlife, Water** All work must be performed in a

manner which minimizes adverse impacts to wetlands, wildlife, water quality and natural resources.

26. **No Interference With Navigation** There shall be no unreasonable interference with navigation by the work herein authorized.

27. **Prior Approval of Changes** If the Permittee desires to make any changes in construction techniques, species to be planted, the site plan, any mitigation plan, scheduling or staging of construction, or any other aspect of this project, the Permittee shall submit a written request to the Regional Permit Administrator to make such proposed changes and shall not make such changes unless authorized in writing by the Department.

28. **Failure to Meet Permit Conditions** Failure of the permittee to meet all the conditions of this permit is a violation of this permit and grounds for an order to immediately cease the permitted activity at the project site.

WATER QUALITY CERTIFICATION SPECIFIC CONDITIONS

1. **Water Quality Certification** The NYS Department of Environmental Conservation hereby certifies that the subject project will not contravene effluent limitations or other limitations or standards under Sections 301, 302, 303, 306 and 307 of the Clean Water Act of 1977 (PL 95-217) provided that all of the conditions listed herein are met.

GENERAL CONDITIONS - Apply to ALL Authorized Permits:

1. **Facility Inspection by The Department** The permitted site or facility, including relevant records, is subject to inspection at reasonable hours and intervals by an authorized representative of the Department of Environmental Conservation (the Department) to determine whether the permittee is complying with this permit and the ECL. Such representative may order the work suspended pursuant to ECL 71- 0301 and SAPA 401(3).

The permittee shall provide a person to accompany the Department's representative during an inspection to the permit area when requested by the Department.

A copy of this permit, including all referenced maps, drawings and special conditions, must be available for inspection by the Department at all times at the project site or facility. Failure to produce a copy of the permit upon request by a Department representative is a violation of this permit.

2. **Relationship of this Permit to Other Department Orders and Determinations** Unless expressly provided for by the Department, issuance of this permit does not modify, supersede or rescind any order or determination previously issued by the Department or any of the terms, conditions or requirements contained in such order or determination.

3. **Applications For Permit Renewals, Modifications or Transfers** The permittee must submit a separate written application to the Department for permit renewal, modification or transfer of this permit. Such application must include any forms or supplemental information the Department requires.

Any renewal, modification or transfer granted by the Department must be in writing. Submission of applications for permit renewal, modification or transfer are to be submitted to:

Regional Permit Administrator
NYSDEC REGION 2 HEADQUARTERS
47-40 21ST ST
LONG ISLAND CITY, NY11101 -5407

4. **Submission of Renewal Application** The permittee must submit a renewal application at least 30 days before permit expiration for the following permit authorizations: Excavation & Fill in Navigable Waters, Tidal Wetlands, Water Quality Certification.

5. **Permit Modifications, Suspensions and Revocations by the Department** The Department reserves the right to exercise all available authority to modify, suspend or revoke this permit. The grounds for modification, suspension or revocation include:

a. materially false or inaccurate statements in the permit application or supporting papers;

b. failure by the permittee to comply with any terms or conditions of the permit;

c. exceeding the scope of the project as described in the permit application;

d. newly discovered material information or a material change in environmental conditions, relevant technology or applicable law or regulations since the issuance of the existing permit;

e. noncompliance with previously issued permit conditions, orders of the commissioner, any provisions of the Environmental Conservation Law or regulations of the Department related to the permitted activity.

6. **Permit Transfer** Permits are transferrable unless specifically prohibited by statute, regulation or another permit condition. Applications for permit transfer should be submitted prior to actual transfer of ownership.

NOTIFICATION OF OTHER PERMITTEE OBLIGATIONS

Item A: Permittee Accepts Legal Responsibility and Agrees to Indemnification
The permittee, excepting state or federal agencies, expressly agrees to indemnify and hold harmless the Department of Environmental Conservation of the State of New York, its representatives, employees, and agents ("DEC") for all claims, suits, actions, and damages, to the extent attributable to the permittee's acts or omissions in connection with the permittee's undertaking of activities in connection with, or operation and maintenance of, the facility or facilities authorized by the permit whether in compliance or not in compliance with the terms and conditions of the permit. This indemnification does not extend to any claims, suits, actions, or damages to the extent attributable to DEC's own negligent or intentional acts or omissions, or to any claims, suits, or actions naming the DEC and arising under Article 78 of the New York Civil Practice Laws and Rules or any citizen suit or civil rights provision under federal or state laws.

Item B: Permittee's Contractors to Comply with Permit
The permittee is responsible for informing its independent contractors, employees, agents and assigns of their responsibility to comply with this permit, including all special conditions while acting as the permittee's agent with respect to the permitted activities, and such persons shall be subject to the same sanctions for violations of the Environmental Conservation Law as those prescribed for the permittee.

Item C: Permittee Responsible for Obtaining Other Required Permits
The permittee is responsible for obtaining any other permits, approvals, lands, easements and rights-of-way that may be required to carry out the activities that are authorized by this permit.

Item D: No Right to Trespass or Interfere with Riparian Rights
This permit does not convey to the permittee any right to trespass upon the lands or interfere with the riparian rights of others in order to perform the permitted work nor does it authorize the impairment of any rights, title, or interest in real or personal property held or vested in a person not a party to the permit.

EXHIBIT J

ACKNOWLEDGEMENT OF ADDENDA

RFP TITLE: _____

Complete Part I or Part II, whichever is applicable, and sign your name in Part III.

Part I

Listed below are the dates of issue for each Addendum received in connection with this RFP:

Addendum # 1, Dated _____, ____

Addendum # 2, Dated_____, ____

Addendum # 3, Dated_____, ____

Addendum # 4, Dated _____, ____

Addendum # 5, Dated_____, ____

Addendum # 6, Dated_____, ____

Part II Acknowledgement of No Receipt

_____ No Addendum was received in connection with this RFP

Part III

Proposer's Name: _____

Proposer's Authorized Representative:

Name: _____

Title: _____

Signature: _____ Date: _____

EXHIBIT K

LIST OF BPCA & BPCPC BOARD MEMBERS AND EMPLOYEES

LIST OF BOARD MEMBERS

George J. Tsunis
Donald Cappocia
Lester Petracca
Louis J. Bevilacqua
Catherine McVay Hughes
Martha J. Gallo
Anthony Kendall

Employees:

Betzayda Abreu
Deborah Addison
Curtis Afzal
Elsa Alvarez
Dana Anders
Anthony Andriano
Stephen Arciold
Laura Arnold
Sharmila Baichu
Lauren Bailey
Marie Baptiste
Mary Barnes
Dorothea Basile
Brett Beecham
Freddy Belliard
Marieke Bender
Yipin Benon
Eric Bernal
Marcus Billips
Emily Birdseye
Nidia Blake-Reeder
LaToya Brooks-Jones
Nancy Buivid
Anthony Buquicchio
Andrea Burgay
Peter Campbell
Frances Caperchi
Caleb Carter
Monica Centeno
Rita Chadha
Luola Chen
Farely Compres Tejada
Julissa Cooke
Sarah Fisher-Curtin
Fiona Cutting
Gwen Dawson
Nicole Dawson
Gilbert DePadua
Phillip DeSantis
Joshua DeVoto
Paul Diaz-Larui
Lawrence Dobens
Justin Donaldson
Tonasia Dopson
Jennifer Dudgeon
Abigail Ehrlich
Maria Ellison
Elise Engler
Richard Faraino
Anitra Fauntleroy
Claudia Filomena
Tamara Flores
Pamela Frederick
James Gallagher
Donna Garcia-Edwards
Abigail Goldenberg
Tiffany Gomez
Anastasia Gonzalez
Lenron Goode
Neresa Gordon
Robert Gould
Sakina Graves
Ned Greenberg
Evelyn Gregg
Jonathan Gross
Robert Hansen
Nimisha Haribaran Patel
Paul Hart
Nicole Heater
Sankar Heerah
Molly Heron
Alex Hing
Keiry Holguin
Craig Hudon
Jake Jacevicius
Amy Jogie
William John
Jasmine Johnson
Benjamin Jones
Gamal Jones
Ebonique Julien
Jessica Jurs
Roland Kemp
Ann Ketring
Susie Kim
Karl Koenig
Leandro Lafuente
Michael Lamancusa
Jeremy Leung
Meredith Levine
Rene Lopcy
Janira Lopez
Robert Maggi
Evelin Maisonet
Lenore Manzella
Yasmine Marcus
Ethan Markus
Siu May Ng
Justin McLaughlin-Williams
Princess McNeill
Brian Meikle
Jeffrey Mesine
Vanessa Mesine
Ronnie Mohammed
Jose Morales
Dana Morgera
Irene Moulketis
Jonathan Mujica
Eric Munson
Lauren Murtha
Bertha Narcisse
Jahmeliah Nathan
Robert Nesmith
Tushain Newman
Yoshihiro Nishida
John O'Hara
Anne O'Neill
Tolbert Oringi
Maril Ortiz
Bienvenido Osorio
Kevin O'Toole
Hector Oyola
Willem Paillant
Jonathan Parker
Gladys Pearlman
Dahlia Pena
Vanessa Pereira
Bruno Pomponio
Katherine Powell
Sandra Power
Robert Quon
Jason Rachnowitz
Madelin Ramirez
Aline Reynolds
Chad Rimer
Manuel Rivera
Kim Robledo
Nelson Rogers
Jose Rosado
Holly Ross
Joel Rufino
Paul Russell
Carlos Santiago
Kwabena Safo-Agyekum
Polina Safovich
Carlos Santiago
Michah Saperstein
Nicholas Sbordone

Anthony Scandura
Jean Schwartz
Ikida Searcy
Yeonju Seong
Rekha Sewraj
Marcella Shanley Taft
John Sherzai
Sean Simon
Kemnarine Singh
Sarah Smedley
Shinay Stewart
Jerome Sturiano
Lance Super
John Tam
Alexis Torres
Ryan Torres
Michelle Torres Davila
Amber Tran
Imani Turrentine
Douglas Van Horn
Christian Vargas
Noe Velasquez
Evangelio Villalobos
Sharon Wade
David Wallace
Annalise Warren
Eric White
Dwight Williams
Sara Wolfe
Katrina Wong
Al Wright
Jouli Yohannes
Erin Yokoi
Gabriela Zafra
Alaura Zayas