BATTERY PARK CITY AUTHORITY

REQUEST FOR PROPOSALS

FOR

Police Memorial and North Cove Marina Electrical Vault Resilience Project

Construction Services

(November 2015)

Table of Contents

Table of Contents 2
I. SUMMARY 3
II. DESCRIPTION OF BPCA 4
III. SERVICES REQUIRED 4
IV. KEY DATES, CONTRACT TERM AND MINIMUM QUALIFICATIONS 4
A. Key Dates 5
B. Anticipated Contract Term 5
C. Minimum Qualification Requirements 5
V. GENERAL REQUIREMENTS 5
A. Questions regarding MBE/WBE participation, joint ventures and sub-contracting goals 5
B. Restricted Period 5
C. Submission of Proposals 6
D. Mandatory Forms 6
VI. PROPOSAL FORMAT AND CONTENTS 7
A. Proposal Format 7
B. Proposal Content 7
C. RFP Questions 7
D. RFP Additional Information Request 8
E. Cost Proposal 10
VII. THE EVALUATION PROCESS 10
A. Objectives 10
B. Interviews 10
C. Evaluation Criteria for Selection 11
D. Basis for Contract Award 11
VIII. NON-COLLUSION 11
IX. IRAN DIVESTMENT ACT 11
X. ENCOURAGING USE OF NEW YORK STATE BUSINESSES IN CONTRACT PERFORMANCE 12
EXHIBIT A 13
EXHIBIT B 17
EXHIBIT C 23
EXHIBIT D 24
EXHIBIT E 25
EXHIBIT F 26
EXHIBIT G 27
EXHIBIT H 28
EXHIBIT I 31

I. SUMMARY

Battery Park City Authority d/b/a Hugh L. Carey Battery Park City Authority ("BPCA") requests proposals (each individually, a "Proposal" or collectively, the "Proposals") from contractors (each individually, a "Proposer" or collectively, the "Proposers") to provide construction services for the Police Memorial and North Cove Marina Electrical Vault Resilience Project (November 2015) to BPCA.

BPCA constructed the New York City Police Memorial (the "Memorial") and the North Cove Marina ("Marina"), both located along the Battery Park City waterfront Esplanade west of the intersection of Liberty Street and South End Avenue, as part of its Master Plan and public art program. The mechanical and electrical equipment serving the Memorial and a portion of the Marina is housed within two separate underground vaults located west of the Memorial and south of the Marina (individually, the "Memorial Vault" and the "Marina Vault" and collectively, the "Vaults").

The electrical and mechanical equipment housed in the Vaults includes, but is not limited to: Con Edison feeders, CT cabinets, meters and pans, 500 kva transformers and 1600 amp disconnect switches, sub-meters, lighting control panels and ejector pumps, along with pumps and motors for the Memorial's water features. The Con Edison electrical service feed for both the Memorial and the south side of the Marina enters through the Marina Vault, where it then splits into two separate meters/services. One meter serves the Marina and the other feeds into the Memorial Vault through underground conduits.

During Super Storm Sandy, water filled both the Memorial and Marina Vaults to their ceilings and damaged all of the mechanical and electrical systems, including the Con Edison equipment. The Marina Vault's equipment was subsequently replaced and its service restored by the prior Marina operator. In light of the cost to replace the Memorial Vault equipment and the ongoing jeopardy posed by continuing to house this equipment in an underground location below updated flood levels, BPCA deferred the restoration of the Memorial Vault, pending the design and construction of an acceptable above-ground structure to contain both the Memorial and Marina equipment.

BPCA retained hanarahanMeyers Architects in 2014 to formulate a design to house the Memorial and Marina electrical equipment in a manner that would provide reliable protection against damage or destruction from future flood threats, while also being sensitive to the pedestrian access and design aesthetic considerations relevant to the surrounding public spaces. The resulting design achieves these objectives by: (1) raising all critical equipment above both the 100-year and 500-year flood plains (according to updated FEMA Flood Insurance Rate Maps); (2) crafting an appealing architectural treatment through the use of two separate but adjacent vault structures that are compatible with and complementary to the surrounding public area design; and (3) creating a convenient and discrete pedestrian connection between the upper and lower plaza areas which provides for an enhanced linkage to and a more elegant interface with the Memorial.

BPCA currently seeks bids to construct, and install mechanical and electrical infrastructure systems to support the Memorial and the south side of the Marina within two newly-designed above-ground structures which are located within Kowsky Plaza and south of the Liberty Street Ramp (the "Project"). Construction work shall include, but not be limited to: providing all materials, site protection, labor and equipment necessary to complete the Project in accordance with the Scope of Work indicated in Exhibit A (the "Scope of Work") and the drawings and specifications provided in Exhibit A, attachments A-1 and A-2 (the "Construction Documents").

Minority-Owned Business Enterprises ("MBE") and Women-Owned Business Enterprises ("WBE") are encouraged to submit Proposals.

This request for proposals, the attachments and any additional information submitted herewith, (collectively, the "RFP") does not obligate BPCA to complete the selection and contract award process. BPCA reserves the right: 1) to accept or reject any and all Proposals; 2) to request additional information from any or all Proposers to assist BPCA

in its evaluation process; 3) to amend or withdraw this RFP prior to the announcement of the selected firm; and 4) to award the proposed services, in whole or in part, to one or more firms. In case of an amendment to the RFP, all Proposers will be provided with a copy of any such amendment(s) and will be afforded the opportunity to revise their Proposals in response to the RFP amendment.

II. DESCRIPTION OF BPCA

BPCA is a public benefit corporation created in 1968 under the laws of the State of New York for the purpose of financing, developing, constructing, maintaining, and operating a planned community development of the Battery Park City site as a mixed commercial and residential community.

Under the Battery Park City Authority Act (the "Act"), BPCA has the following powers, among others: to borrow money and to issue negotiable bonds, notes or other obligations and to provide for the rights of the holders thereof; to acquire, lease, hold, mortgage and dispose of real property and personal property or any interest therein for its corporate purposes; to construct, improve, enlarge, operate and maintain Battery Park City; to make bylaws for the management and regulation of its affairs, and, subject to agreements with bondholders, for the regulation of Battery Park City; to make contracts and to execute all necessary or convenient instruments, including leases and subleases; to accept grants, loans and contributions from the United States, or the State of New York or the City of New York (the "City"), or any agency or instrumentality of any of them, or from any other source and to expend the proceeds for any corporate purpose; to fix, establish and collect rates, rentals, fees and other charges; and to do all things necessary or convenient to carry out the powers expressly granted by the Act. BPCA has no taxing power.

Since its inception, BPCA has caused the staged development of Battery Park City, in individual parcels, creating a richly diversified mixed use community providing residential and commercial space, with related amenities such as parks, open spaces, plazas, recreational areas and a waterfront esplanade. Most individual parcels of land in Battery Park City were developed into residential and commercial buildings by tenants ("Ground Lease Tenants") under long-term ground leases with BPCA. The Ground Lease Tenants are responsible for the maintenance, insurance and defense and indemnification of BPCA with regard to those leased parcels.

One of BPCA's key responsibilities under the Act is to operate, maintain and repair the parks and open spaces in and around Battery Park City's residential and commercial areas. This function has been delegated by BPCA to the Battery Park City Parks Conservancy Corporation ("BPCPC") through a written Management Agreement. BPCPC carries out its mission by maintaining 36 acres of parks, playgrounds and open spaces, including the waterfront esplanade. BPCPC also develops programs and manages public events for the Battery Park City community. BPCA owns and has built out a commercial condominium unit in a residential building in Battery Park City, which serves as the BPCPC headquarters.

To obtain a copy of BPCA's most recently completed audited financial statements, please visit BPCA's official website at www.batteryparkcity.org. The audited financial statements and related reports found on BPCA's website will provide you with an overview of the operations for which BPCA is responsible and the areas of expertise in which the selected Proposer must be proficient. For an overview of BPCPC's operations, please visit its website at www.bpcparks.org.

III. SERVICES REQUIRED

A. The selected Proposer will be required to perform the services set forth in the Scope of Work, attached as Exhibit A hereto.

B. All work to be performed by the selected Proposer shall be performed under the supervision of a project manager in charge of this engagement (the "Lead Manager"), who must ensure that the work completed for BPCA is performed competently and in a timely manner.

IV. KEY DATES, CONTRACT TERM AND MINIMUM QUALIFICATIONS

A. Key Dates

The following is a list of key dates, up to and including the date Proposals are due to be submitted, which is subject to change at BPCA's discretion:

- Request for Proposals issued: November 25, 2015.
- Pre-proposal meeting: December 3, 2015 10:30 am. The meeting will be held at the BPCA offices, located at 200 Liberty Street, New York, NY 10281.
- Site Inspection of the Police Memorial Vault and North Cove Vaults will be conducted on December 3, 2015 at 11:30am.

  All proposers who wish to access the vault spaces should report to the BPCA Offices located on the 24th floor of 200 Liberty Street, New York, N.Y. and must email copies of the executed waiver and insurance certificates specified in Exhibit I to the "Designated Contact" no later than 12:00 pm on December 2, 2015. Additionally, proposers must provide original hard copies of the waiver and insurance certificates on the day of the inspection.

- Deadline to submit questions to BPCA: December 21, 2015 by 5:00 p.m. (by email only). All questions regarding this RFP should be submitted in writing via email to the "Designated Contact": Michael LaMancusa, Contracts Administrator, Battery Park City Authority, at michael.lamancusa@bpca.ny.gov.
- Deadline for BPCA's response to substantive questions: December 30, 2015 (via BPCA website).
- **DUE DATE FOR RESPONSES TO RFP: January 11, 2016 by 3:00 p.m. (the "Due Date").**
- Selection and notification of successful Proposer: To be determined.
- Contract start date: To Be Determined

B. Anticipated Contract Term

It is anticipated that the term of the contract awarded pursuant to this RFP (the "Contract") will be fifteen (15) months; however, it is expected that the Scope of Work will be substantially completed within seven (7) to nine (9) months of Project commencement. BPCA reserves the right to terminate the Contract at any time, with or without cause, in accordance with the terms of the Contract. BPCA's standard form of contract is attached hereto as Exhibit C.

C. Minimum Qualification Requirement

The following are the Minimum Qualification Requirements for this RFP. **Proposals that fail to comply with these requirements will be rejected**.

1) The Proposer must have an office in New York State (a New York City office is preferred);
2) The Proposer must be licensed to do business in the State of New York; and
3) The Proposer must have at least five (5) years' experience providing general contracting services for projects of the type and size contemplated by this RFP.

V. GENERAL REQUIREMENTS

A. Questions regarding MBE/WBE participation, joint ventures and sub-contracting goals

Please see **Exhibit B** (attached) for contractor requirements and procedures for business participation opportunities for New York State certified MBEs/WBEs and equal employment opportunities for minority group members and women.

For questions relating to MBE/WBE participation, joint ventures and sub-contracting goals ONLY, please contact "MBE/WBE Designated Contact" Mr. Anthony Peterson at 212.417.2337.

B. Restricted Period

Applicants are restricted from making contact with anyone other than the Designated Contact or MBE/WBE Designated Contact specified above during the period from the date of publication of the notice of this RFP in the New York State Contract Reporter through approval of the Contract by BPCA (the "Restricted Period"). Employees of BPCA are required to record certain contacts during the Restricted Period, including, but not limited to, any oral, written or electronic communication with a governmental entity under circumstances where a reasonable person would infer that the communication was intended to influence BPCA's conduct or decision regarding the governmental procurement, and to make a determination of responsibility based, in part, upon any such contact. Failure to abide by this process may result in a finding that the firm is a non-responsive Proposer.

C. Submission of Proposals

Proposals are due no later than 3:00 p.m. on January 11, 2016

Proposers must submit seven (7) paper copies of their Proposals and one (1) electronic CD-Rom copy in a sealed package clearly marked "**Proposal Enclosed – Police Memorial and North Cove Marina Electrical Vault Resilience Project (November 2015) – Construction Services** to the Designated Contact **by messenger, overnight courier or certified mail** to the following address:

Michael LaMancusa,
Contracts Administrator,
Battery Park City Authority
One World Financial Center, 24th Floor
New York, NY 10281

BPCA is not responsible for any internal or external delivery delays which may cause any Proposal to arrive beyond the stated Due Date. To be considered, Proposals must arrive at the time and place specified herein and be time stamped by BPCA's time stamp prior to the Due Date. Please leave ample time for building security, as late Proposals will not be accepted. Proposals submitted by fax or electronic transmission will NOT be accepted. A Proposer may, after submitting a Proposal, amend its Proposal by submitting a second, amended Proposal, clearly labeled "**Amended Proposal Enclosed – Police Memorial and North Cove Marina Electrical Vault Resilience Project (November 2015) – Construction Services**," as long as the amended Proposal is submitted by the Due Date.

Public access to Proposals shall be governed by the relevant provisions of the Freedom of Information Law, Article 6 of the New York State Public Officers Law, and regulations adopted pursuant thereto.

D. Mandatory Forms

Proposers must complete and include with their Proposal all "Mandatory Forms," which can be found at the following URL address: http://www.batteryparkcity.org/pdf_n/Mandatory_Forms_Packet.pdf, by the Due Date.

These Mandatory Forms include the following:

1) NYS Standard Vendor Responsibility Questionnaire – **Submit with the Cost Proposal (as described below), one (1) original unbound set of a completed NYS Standard Vendor Responsibility Questionnaire with original ink signatures. Do not include the Standard Vendor Responsibility Questionnaire in the bound copies of the Cost Proposal.** The NYS Standard Vendor Responsibility Questionnaire must be notarized

and signed by the individual(s) authorized to bind the firm contractually. Indicate the title or position that the signer holds within the firm.

2) State Finance Law § 139 Form 1 – **one original unbound completed SFL 139 Form 1: Professional's Certifications Pursuant to SFL § 139-j and § 139-k with original signature**. State Finance Law § 139 Forms 1 must be signed by the individual(s) authorized to bind the firm contractually.

3) W-9 form.

4) Statement of Non-Collusion.

5) Diversity Forms.

VI. PROPOSAL FORMAT AND CONTENTS

A. Proposal Format

The Proposal must be printed on 8½" x 11" paper. Pages should be numbered. The Proposal will be evaluated on the basis of its content, not length and should be limited to no more than fifteen (15) pages, exclusive of the Transmittal Letter and the Appendices listed below. BPCA reserves the right to disqualify Proposals that fail to comply with any of these instructions.

B. Proposal Content

A Proposal in response to this RFP must include the following sections in the order listed:

1) Transmittal Letter, as follows:

The Proposal must include a signed Transmittal Letter from a person within the firm who is authorized to bind the firm, preferably the Lead Manager. **Transmittal Letters must be signed. Proposals with unsigned Transmittal Letters will be rejected.**

The Transmittal Letter must include a representation by the Proposer that, except as disclosed in the Proposal, no officer or employee of the Proposer is directly or indirectly a party to or in any other manner interested financially or otherwise in this RFP.

2) Corporate Overview of the proposer.
3) Firm's discussion of its understanding of the Services Required (see Section III).
4) Firm's Responses to the RFP Questions and RFP Additional Information Request, set forth below.
5) Firm's Cost Proposal, as described below.
6) Firm's response to the question regarding the use of New York State businesses set forth in Section X of the RFP.

C. RFP Questions

1) Describe your firm's background, size, and history as it may be relevant to the Scope of Work, with an emphasis on: a) general construction; b) electrical vault construction and related components / systems; c) construction work involving public spaces and public art; and d) landscaping.
2) Describe the relevant special services your firm provides, particularly those that may not be offered by other firms.
3) Discuss your approach to the Project, addressing your step-by-step approach for securing the site, routing of pedestrian traffic and outlining the proposed procedures for executing the site protection work.

4) Discuss your step-by-step approach for the project phasing and the potential impacts it may have on access to the surrounding public spaces, the Memorial and the Marina. Discuss potential impacts the Project may have on Marina operations during the annual boating season of April through November.
5) Provide a list of all proposed sub-contractors for the completion of the work.
6) Itemize the work you intend to perform with your firm's resources and/or workforce as well as the work for which you propose to use sub-contractors.
7) Describe your proposed team's experience (including both direct contract work and work performed under subcontracts) with similar work for other public agencies and authorities, with a particular emphasis on New York State and City, and Federal government, agencies and authorities. Include contract dates, the nature of the work performed, the contracting agency, the contract number (if known) and the supervisor for each.
8) Within the past three years, have there been any significant developments in your firm such as changes in ownership or restructuring? Do you anticipate any significant changes in the near future? If so, please describe.
9) How does your firm identify and manage conflicts of interest?
10) Has your firm or any of the firm's partners/employees been disciplined or censured by any regulatory body within the last 5 years? If so, please describe the relevant facts.
11) Within the last five years, has your firm, or a partner or employee in your firm, been involved in litigation or other legal proceedings relating to the provision of construction [and electrical] services? If so, please provide an explanation and the current status or disposition of the matter.
12) Are there any potential conflict of interest issues in representing BPCA?
13) List any professional or personal relationships your firm's Lead Partners or Lead Managers may have with BPCA's Board and/or staff members of BPCA.
14) List all the Lead Managers you intend to assign to this engagement and the area(s) of specialization for each Lead Manager. Describe the role of each Lead Manager who will be assigned to this engagement.
15) Describe your firm's "backup plan" in the event one or more of the Lead Managers assigned to this engagement leave the firm.
16) Proposers shall identify any and all exceptions taken to BPCA's standard form of contract attached hereto as Exhibit C, detailing the reasons for such exceptions. No exceptions to the contract will be considered by BPCA after submission of the proposals. BPCA maintains the right to reject proposals based on non-conformance with the standard form of contract.
17) In the past five years, have any clients terminated their working relationship with your firm? If so, please provide a brief statement of the reasons. Provide the name of the client and each such client's in-house counsel's name, address and telephone number.
18) Please provide any additional information which would serve to distinguish your firm from other firms and that you believe may be relevant to this RFP and your capability to perform the services requested.

D. RFP Additional Information Request

1) Insurance:

a. Do you impose any limitations on liability through your contracts?
b. Describe the levels of coverage for any insurance your firm carries. Provide an insurance certificate showing your firm's coverage in accordance with the following:

- Commercial General Liability Insurance limits shall not be less than $1,000,000 per occurrence and $2,000,000 in the aggregate;
- Umbrella Liability limits shall not be less than $10,000,000;
- Automobile liability Combined Single Limit shall not be less than $1,000,000;

- Workers' Compensation, Employer's Liability, and Disability Insurance shall not be less than statutory limits;
- Contractors Pollution Liability shall not be less than $5,000,000;

The costs of the insurance shall be included in the Proposal. BPCA, BPCPC and the State of New York must be protected as Additional Insureds on a primary and non-contributory basis on the Commercial General Liability (on ISO Form CG 2010 (11/85) or similar), Umbrella Liability, Automobile Liability, and Contractors Pollution Liability policies. BPCA, BPCPC and the State of New York must also be protected as additional insured on all levels of insurance held by sub-contractors. The contractor and its subs must indemnify and hold harmless BPCA, BPCPC and State of New York.

Policies must provide a waiver of subrogation against all additional insured.

The contractor must provide evidence of insurance (including declaration page and appropriate endorsements) satisfactory to BPCA before commencement of work.

c. Bonding: Provide a letter from your surety(ies) stating that you are able to provide a payment and performance bond as required by the standard form of contract (Exhibit C).

2) Progress Schedule

Attach a bar chart schedule for performance of the Project, showing the sequencing of the work with durations for each element, staffing levels, work shifts, all Project milestones and successful overall completion. The schedule should take into account that the Police Memorial, Kowsky Plaza, Liberty Ramp and the North Cove Marina are heavily used by community residents and visitors, and will remain in operation through the duration of the Project. Understanding that the Project will involve certain limitations to public access in and around the construction site, please provide along with your progress schedule a preliminary logistics plan which reflects your strategy for performing the Project in a safe and expeditious manner while also limiting disruption to the public's use and access. BPCA's objective is to substantially complete the Scope of Work (including any Add Alternates) no later than September 30, 2016. In the event that permanent electrical service is not available to the south side of the Marina by April 1, 2016, provision for temporary electrical service must be provided to support Marina operations.

3) References:

Please provide at least three (3) client references for whom your firm has performed similar work to that requested in this RFP. For each client, please provide the name, address and telephone number for the client's project manager or primary project contact.

4) Appendices:

a. Provide resumes for all key management personnel listed in your Proposal, including the staff that your firm is proposing to assign to this Project.

b. Provide a copy of each addendum submitted by BPCA with regard to this Proposal (if applicable) and a signed acknowledgment of receipt of each addendum.

5) Financial Statements:

Provide a copy of your firm's most recent Audited Financial Statements (within the last year).

6) MBE/WBE & EEO Policy Statement

a. Attach the completed MBE/WBE & EEO Policy Statement form provided as part of Exhibit B.
b. Attach the completed Diversity Practices Questionnaire form provided as part of Exhibit B

E. Cost Proposal

Three copies of the Cost Proposal must be submitted in a separately sealed envelope, as directed below. To submit a complete Cost Proposal, Proposer must submit each of the following:

1) A lump sum amount for performance of all services described as Based Bid services in the Scope of Work, in the form of the cost proposal attached hereto as Exhibit D.

2) Separate lump sum amounts for performance of all services described as Add Alternates in the Scope of Work, in the form of the cost proposal attached hereto as Exhibit D.

3) Schedule of Values in the form attached as Exhibit E.

4) Unit Pricing Schedule in the form attached as Exhibit F.

5) Labor Rates for all pertinent trades in the form attached as Exhibit G.

The Cost Proposal, regardless of whether it is bound, must be submitted in its own separate envelope within the sealed package containing all other Proposal documents. For the avoidance of doubt, the Cost Proposal must be submitted separately and unbound from the remainder of the Proposal documents.

VII. THE EVALUATION PROCESS

A. Objectives

The primary objective of the evaluation process is to select a firm that:

- Demonstrates a thorough understanding of the scope of the engagement and the specific responsibilities which it entails;
- Possesses adequate resources to handle assigned responsibilities and to handle unforeseen circumstances that may arise;
- Assigns highly skilled, experienced, diligent, responsible and professional personnel to perform the required services;
- Maintains high ethical standards and has an unblemished reputation;
- Has no conflict of interest between its performance of the Services Required and its work on behalf of other clients.

The selection process will begin with the review and evaluation of each of the written Proposals. The purpose of this evaluation process is twofold: (1) to examine the responses for compliance with this RFP and (2) to identify the complying firms that have the highest probability of satisfactorily performing the Services Required. The evaluation process will be conducted in a comprehensive and impartial manner by a committee of BPCA's employees selected by BPCA (the "Committee"). **The Committee will evaluate the Proposals based upon the evaluation criteria for selection set forth below.**

BPCA will reject and return unopened to the Proposer any Proposal received after the RFP Due Date. All timely submitted Proposals will be reviewed to determine if they contain all required submittals specified herein. Incomplete Proposals may be rejected.

B. Interviews

BPCA reserves the right to determine whether interviews will be necessary for any or all of the Proposers. The purpose of the interview is to further document a Proposer's ability to provide the Services Required, and to impart to the Committee an understanding of how specific services will be furnished. The proposed Lead Manager, as well all other key personnel proposed to provide the services must be present and participate in the interview. The firm will be evaluated on the basis of whether the interview substantiates the characteristics and attributes claimed by the Proposer in its written response to this RFP and any other information requested by the Committee prior to the interview.

C. Evaluation Criteria for Selection

Selection will be based upon the following criteria:

1) Experience performing construction work of similar nature and complexity, including: 35%
   - Building core and shell;
   - Mechanical, electrical, plumbing;
   - Landscaping;
   - Work involving public spaces, public art and water features

2) Understanding of and approach to Project, including: 20%
   - Satisfactory incorporation of all Project requirements;
   - Project sequencing and phasing;
   - Schedule (commencement and duration); and
   - Sensitivity to adjacent public and landscaped areas.
3) Staffing and resources: 20%
   - Qualifications and availability of proposed Project staffing; and
   - Depth and availability of firm expertise and resources applicable to Project.
4) Cost 10%
5) Proposed MBE/WBE utilization plan (the "Utilization Plan") and/or Firm MBE/WBE status: 5%
6) Diversity Practices Questionnaire: 10%

D. Basis for Contract Award

The Contract will be awarded to the highest rated Proposer whose Proposal is determined to be responsive..

VIII. NON-COLLUSION

By submitting a Proposal, Proposers hereby warrant and represent that any ensuing Contract has not been solicited or secured directly or indirectly in a manner contrary to the laws of the State of New York, and that said laws have not been violated and shall not be violated as they relate to the procurement or the performance of the Contract by any conduct, including the paying or giving of any fee, commission, compensation, gift, or gratuity or consideration of any kind, directly or indirectly, to any member of the board of directors, employee, officer or official of BPCA.

IX. IRAN DIVESTMENT ACT

By submitting a Proposal or by assuming the responsibility of any Contract awarded hereunder, Proposers hereby certify that they are not on the "Entities Determined To Be Non-Responsive Bidders/Offerers Pursuant to The New York State Iran Divestment Act of 2012" list ("Prohibited Entities List") posted on the New York State Office of General Services website at: http://www.ogs.ny.gov/about/regs/docs/ListofEntities.pdf and further certify that they will not utilize any sub consultant that is identified on the Prohibited Entities List on this Contract. The selected Proposer agrees that should it seek to renew or extend any Contract awarded hereunder, it must provide the same certification at the time the Contract is renewed or extended. The selected Proposer also agrees that any proposed assignee of the Contract will be required to certify that it is not on the Prohibited Entities List before BPCA may

approve a request for assignment of the Contract.

During the term of any Contract awarded hereunder, should BPCA receive information that a person (as defined in State Finance Law §165-a) is in violation of the above-referenced certifications, BPCA will review such information and offer the person an opportunity to respond. If the person fails to demonstrate that it has ceased its engagement in the investment activity which is in violation of the New York State Iran Divestment Act of 2012 within 90 days after the determination of such violation, then BPCA shall take such action as may be appropriate and provided for by law, rule, or contract, including, but not limited to, seeking compliance, recovering damages, or declaring the selected Proposer in default of the awarded Contract.

BPCA reserves the right to reject any request for renewal, extension, or assignment for an entity that appears on the Prohibited Entities List prior to the renewal, extension, or assignment of the Contract, and to pursue a responsibility review with the selected Proposer should it appear on the Prohibited Entities List hereafter.

X. ENCOURAGING USE OF NEW YORK STATE BUSINESSES IN CONTRACT PERFORMANCE

New York State businesses have a substantial presence in State contracts and strongly contribute to the economies of the state and the nation. In recognition of their economic activity and leadership in doing business in New York State, Proposers for this Contract for commodities, services or technology are strongly encouraged and expected to consider New York State businesses in the fulfillment of the requirements of the Contract. Such partnering may be as subcontractors, suppliers, protégés or other supporting roles.

Proposers need to be aware that all authorized users of this Contract will be strongly encouraged, to the maximum extent practical and consistent with legal requirements, to use responsible and responsive New York State businesses in purchasing commodities that are of equal quality and functionality and in utilizing services and technology. Furthermore, Proposers are reminded that they must continue to utilize small, minority and women-owned businesses, consistent with current State law.

Utilizing New York State businesses in State contracts will help create more private sector jobs, rebuild New York's infrastructure, and maximize economic activity to the mutual benefit of the contractor and its New York State business partners. New York State businesses will promote the contractor's optimal performance under the Contract, thereby fully benefiting the public sector programs that are supported by associated procurements.

Public procurements can drive and improve the State's economic engine through promotion of the use of New York businesses by its contractors. The State therefore expects bidders/proposers to provide maximum assistance to New York businesses in their contracts. The potential participation by all kinds of New York businesses will deliver great value to the State and its taxpayers.

Proposers can demonstrate their commitment to the use of New York State businesses by responding to the question below:

Will New York State businesses be used in the performance of this contract? _____Yes _____No

If yes, identify New York State businesses that will be used and attach identifying information.

EXHIBIT A

SCOPE OF WORK

The selected Proposer shall provide all labor, equipment, tools, materials, site protection and construction services necessary to complete the Project, in accordance with the plans and specifications attached hereto as Attachment A-1 and A-2 (the "Construction Documents") (the "Work"), The Work shall include, but not be limited to:

I. Base Bid

a. Pre-construction, performance of a detailed existing conditions survey of Kowsky Plaza, the NYC Police Memorial, the North Cove Marina Electrical Vaults and Liberty Street Ramp and provision of a comprehensive report of current conditions and any existing damage;
b. Securing of all required permits for the Work from NYCDOT and NYCDOB;
c. Securing and safeguarding of all staging areas, access areas and the Project site, as required to perform the Work and insure public safety;
d. Protection of all existing sidewalks, pavers, fences, walls, light poles, trees, utilities, and associated facilities as required to insure their preservation throughout the duration of the Project;
e. Protection of existing plant materials and adjacent trees located to the immediate East and West of the proposed structure;
f. Complete removal of two existing mature trees located within the proposed building footprints;
g. Selective removal of a portion of the existing retaining wall and railing separating Kowsky Plaza and Liberty Street ramp;
h. Removal and modification of existing irrigation system (caps and valves to be installed as necessary);
i. Procurement of new planting materials (both seed and nursery grown) in accordance with landscaping plan provided in the Drawings;
j. Excavation, shoring and bracing as required to install all foundation elements in order to facilitate construction operations;
k. Furnishing and installation of piles, foundations and all related elements for the proposed structures;
l. Construction of new above ground vaults and interstitial staircase;
m. Supply, relocation and installation of all equipment as indicated;
n. Modification of existing vault structure and components as indicated
o. Performance of all site grading;
p. Repair and painting of all existing fencing;
q. Furnishing and installation of new pavers, granite block, and granite panels;
r. Restoration and/or repair of any paving, paving stones, walkways, curbs, fencing, landscaping or other items damaged or destroyed outside of the Project site by virtue of accessing and delivering materials and equipment to the Project site and/or by virtue of performance of the Work;
s. Cleaning of site and contractor access paths;
t. Provision of a maintenance procedure manual and schedule for all project components, including equipment and building cladding;
u. Provision of appropriate warranties for all materials;
v. Provision of as-built drawings documenting the Project work;
w. Inspection, signoff and closeout of all work trades with the appropriate governmental agencies, as required.

II. General Considerations

a. Time shall be of the essence in the performance and completion of the Work.
b. The Police Memorial, Kowsky Plaza, Liberty Ramp and the North Cove Marina are heavily used by community residents and visitors, with certain seasonal variations, and will remain in operation through the duration of the Project. It will be necessary for the selected Proposer to coordinate with BPCA and BPCPC

and sequence the Work in order to minimize to the extent possible any impacts on the usage of these facilities.

III. Schedule

The project must be 100% complete no later than September 30, 2016; however, additional evaluation points (under "Approach to Work and Schedule") will be awarded to Proposers that provide a verifiable schedule resulting in substantial completion of the Project in advance of this date, with the earliest credible completion dates receiving the highest "Approach to Work and Schedule" points. **In the event that permanent electrical service is not available to the south side of the Marina by April 1, 2016, the selected Proposer must make provisions for temporary electrical service to support Marina operations until permanent service is provided.**

Attachment A-1

Plans



KOWSKY PLAZA VAULTS

BATTERY PARK CITY NORTH COVE

hMa
hanrahan Meyers architect,llp

ARCHITECT:
HANRAHAN MEYERS ARCHITECTS, LLP
6 MAIDEN LANE SUITE 510
NEW YORK, NY 10038
T: (212) 989-6026 F: (917) 591-9825

Cosentini

MEP ENGINEERS:
Cosentini Associates
Two Pennsylvania Plaza - Third Floor
NEW YORK, NY 10121
T: (212) 615-3760 F: (212) 615-3600

Thornton Tomasetti

STRUCTURAL ENGINEERS:
Thornton Tomasetti
51 Madison Avenue
NEW YORK, NY 10010
T: (917) 661-7800 F: (917) 661-7801

EK|A PLLC

LANDSCAPE ARCHITECTS:
Elizabeth Kennedy Landscape Architect, PLLC
Brooklyn Navy Yard Building 275 Room 202
63 Flushing Avenue Unit 264
BROOKLYN, NY 11205
T: (718) 569-8837 F: (718) 709-5885

PROJECT:

Kowsky Plaza
Vaults

Battery Park City- North
Cove

PROPERTY INFORMATION:

NOTES:

Rev No.	Description	Date

DOB STAMPS AND SIGNATURE:

SEAL AND SIGNATURE:

DATE: 11/15/15

DRAWN BY: SH/AS

CHECKED BY: TH

SHEET TITLE:

Project
Introduction

PAGE 1 OF 18

SHEET NUMBER:

G-000.00

APPLICABLE CODES, STANDARDS, AND ORDINANCES:

CODE, STANDARD, OR ORDINACE:

THE CITY OF NEW YORK - ZONING RESOLUTION
2014 NEW YORK CITY BUILDING CODE
2014 NEW YORK CITY MECHANICAL CODE
2014 NEW YORK CITY PLUMBING CODE
2014 NEW YORK CITY ELECTRICAL CODE
NEW YORK CITY ENERGY CONSERVATION CODE

GENERAL INFORMATION:

OCCUPANCY :
OCCUPANCY CLASIFICATION: GROUP U - UTILITY AND MISCELLANEOUS
PRIMARY USE: ELECTRICAL SWITCHGEAR FOR ADJACENT PUBLIC SPACES
ACCESSORY USE: NONE

CONSTRUCTION CLASSIFICATION:
CONSTRUCTION TYPE: TYPE IV - HEAVY TIMBER

NYC ZONING INFORMATION:

SEE SITE PLAN FOR ADDITIONAL INFORMATION

2015 NEW YORK CITY ZONING RESOLUTION		REFERENCE
GENERAL/LOCATION INFORMATION		
ADDRESS	NEW BUILDING - NO CURRENT ADDRESS	
BLOCK	16	
LOT	3	
ZONING DISTRICT	A - SOUTH RESIDENTIAL NEIGHBORHOOD	MAP 84-A1
FLOOD COMPLIANCE	ZONE VE: 500 YEAR FLOOD = 14' ABOVE NAVD BUILDING ENTRANCES = 14.65' ABOVE NAVD BUILDING FLOOR = 12' ABOVE NAVD INTERIOR EQIP. HEIGHT = 14' ABOVE NAVD	
HEIGHT AND SETBACK INFORMATION		
BUILDING HEIGHT	12' -5" ABOVE PLAZA LEVEL	
HEIGHT RESTRICTIONS	85' MAXIMUM	ZR 84-135
SETBACKS	N/A -SETBACK ONLY TO OCCUR ABOVE 85'	ZR 84-132
FLOOR AREA INFORMATION		
LOT FLOOR AREA RATIO	15	ZR 64-331
LOT SIZE	APPROX. 1,979,625 SQ FT	
PROPOSED BUILDING ZSF	1,000 SQ FT (INCLUDING STAIR)	
OPEN SPACE	N/A	ZR 84-11
REAR YARD	NO REQUIREMENTS	
PARKING		
PARKING REQUIRED	NONE	

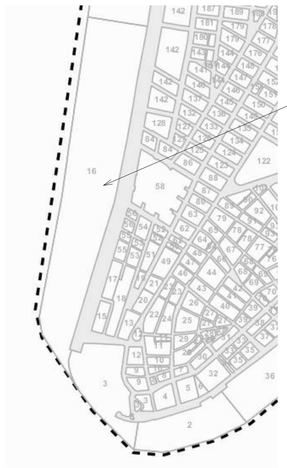

KEY PLAN (NTS)

FIRE SEPARATION DISTANCE:

CODE AND EDITION	GROUP OCCUPANCY TYPE	X < 5'-0" SEPERATION	X < 10'-0" SEPERATION	X < 30'-0" SEPERATION	> 30'-0" SEPERATION
2014 NEW YORK CITY BUILDING CODE TABLE 602	U	1 HR	1 HR	1 HR	0 HR

ACTUAL DISTANCE FROM NEAREST BUILDING: 35'-9" TO OUTER BUILDING WALL

FIRE PROTECTION:

SPRINKLER SYSTEM: N/A (NYC BUILDING CODE SECTION 903.2)
ALARM SYSTEM: EXTERNALLY MONITORED WITH SMOKE DETECTORS

BUILDING AREA:

AREA SCHEDULE (GROSS BUILDING)	
EAST VAULT	260 SQ FT
WEST VAULT	260 SQ FT
INTERCONNECTING STAIR	480 SQ FT

ACCESSIBILITY:

ACCESS VIA FIRE STAIRS ONLY, NON-ACCESSIBLE
USE GROUP U IS EXEMPT FROM ACCESSIBILITY REQUIREMENTS (NYC BC SECTION 1103.2.5)

OCCUPANCY:

ROOM	AREA	NYC OCCUPANCY TYPE	SF/OCCUPANT	TOTAL OCCUPANTS
EAST VAULT	260 SF	MECHANICAL ROOMS	300	1
WEST VAULT	260 SF	MECHANICAL ROOMS	300	1
GRAND TOTAL OCCUPANTS				2

ONE EXIT PROVIDED PER ROOM AS PER TABLE 1015.1: MORE THAN ONE EXIT REQUIRED IF OCCUPANCY EXCEEDS 74 PEOPLE

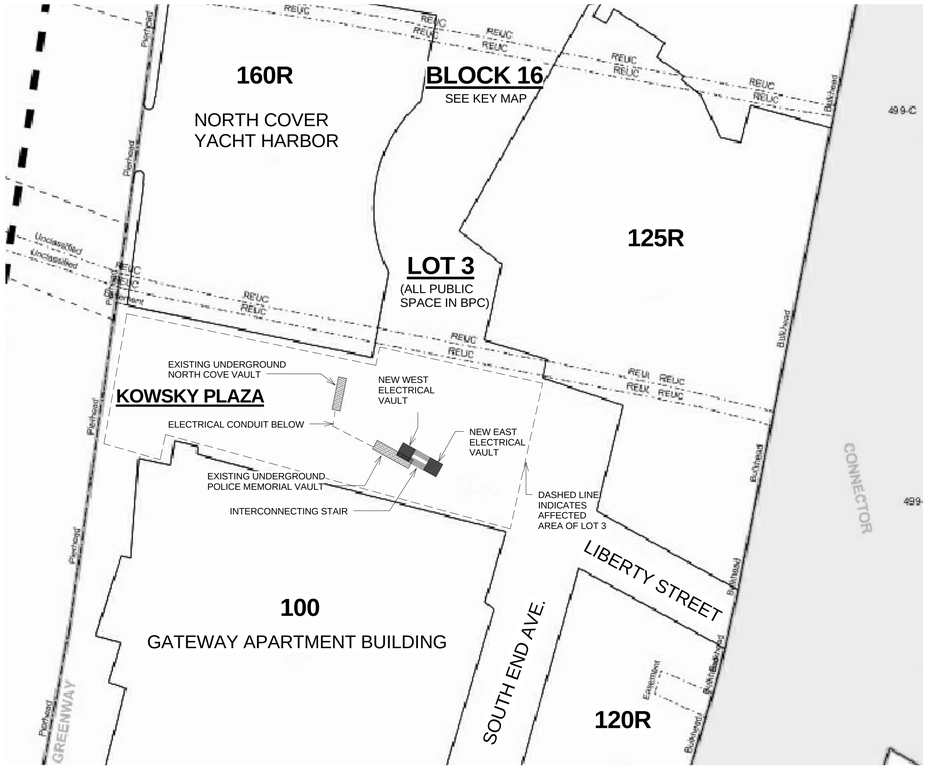

ZONING REFERNCE MAP (NTS)

TABULAR ANALYSIS:

I, THOMAS HANRAHAN, LICENSED ARCHITECT, CERTIFY TO THE BEST OF MY KNOWLEDGE, BELIEF AND PROFESSIONAL JUDGEMENT THESE PLANS AND SPECIFICATIONS ARE IN COMPLIANCE WITH THE ENERGY CONSERVATION CONSTRUCTION CODE OF NEW YORK STATE 2010

ENERGY ANALYSIS FOR NEW CONSTRUCTION - RESIDENTIAL
CLIMATE ZONE 4

ITEM DESCRIPTION	PROPOSED DESIGN VALUE	CODE PRESRIPTIVE VALUE	SUPPORTING DOCUMENTATION
BUILDING ENVELOPE	N/A	N/A	NYC ECC 101.5.2: THE FOLLOWING BUILDINGS... SHALL BE EXEMPT FROM THE BUILDING THERMAL ENVELOPE PROVISION OF THIS CODE: ...2. THOSE THAT DO NOT CONTAIN CONDITIONED SPACE. SEE M-001, M-102 FOR DETAILS.
HVAC	N/A	N/A	THIS STRUCTURE UTILIZES PASSIVE COOLING AND HEATING WITH THE ASSISTANCE OF FANS. SEE M-001, M-102 FOR DETAILS.
MANUAL LIGHTING CONTROLS	N/A	N/A	NYC ECC C405.2.1, SEE M-001, M-102 FOR DETAILS.
INTERIOR LIGHTING CONTROLS	N/A	N/A	NYC ECC C405.2.1., SEE M-001, M-102 FOR DETAILS.
LIGHT REDUCTION CONTROLS	N/A	N/A	NYC ECC C405.2.1.2, SEE M-001, M-102 FOR DETAILS.
INTERIOR LIGHTING POWER	TOTAL PERMANENTLY INSTALLED INTERIOR LIGHTS = 14 14 HIGH EFFICACY LIGHTS = 100% OF TOTAL LIGHTS IN HOUSE > 50% OK	50% MIN HIGH EFFICAC LIGHTS OF TOTAL PERMANENTLY INSTALLED INTERIOR LIGHTS AS PER 505.5.3	A-104.00
EXTERIOR LIGHTING POWER	PROPOSED TOTAL SITE LUMINAIRE = 174 WATTS < 600 WATTS OK	600 WATTS MAX ALLOWABLE NYC ECC 505.6.2(2)	A-104.00

SYMBOL LEGEND

1 View Name 1/8" = 1'-0" — VIEW TITLE
1 / A101 — VIEW REFERENCE
101 — DOOR TAG
1 Ref / Ref A101 Ref / 1 Ref — ELEVATION TAG
1 — REVISION TAG
SIM 1 A101 — SECTION MARKER
1t — WINDOW TAG
SIM 1 A101 — DETAIL CALLOUT HEAD
℄ — CENTERLINE
Room name 101 Volume — ROOM TAG

HATCHES AND FILLS

CONCRETE
EARTH
WOOD
RIGID INSULATION
TURF BLOCK

Legend 1
1/4" = 1'-0"

hMa
hanrahan Meyers architect,llp

ARCHITECT:
HANRAHAN MEYERS ARCHITECTS, LLP
6 MAIDEN LANE SUITE 510
NEW YORK, NY 10038
T: (212) 989-6026 F: (917) 591-9825

Cosentini

MEP ENGINEERS:
Cosentini Associates
Two Pennsylvania Plaza - Third Floor
NEW YORK, NY 10121
T: (212) 615-3760 F: (212) 615-3600

Thornton Tomasetti

STRUCTURAL ENGINEERS:
Thornton Tomasetti
51 Madison Avenue
NEW YORK, NY 10010
T: (917) 661-7800 F: (917) 661-7801

EKLA PLLC

LANDSCAPE ARCHITECTS:
Elizabeth Kennedy Landscape Architect, PLLC
Brooklyn Navy Yard Building 275 Room 202
63 Flushing Avenue Unit 264
BROOKLYN, NY 11205
T: (718) 569-8837 F: (718) 709-5885

PROJECT:
Kowsky Plaza Vaults
Battery Park City- North Cove

PROPERTY INFORMATION:

NOTES:

Rev No.	Description	Date
1	Adendum#1	10.05.15

DOB STAMPS AND SIGNATURE:

SEAL AND SIGNATURE:

DATE: 11/15/15
DRAWN BY: SH/AS
CHECKED BY: TH
SHEET TITLE:
Site Plan/ Plot Plan
PAGE 2 OF 18

SHEET NUMBER:
A-000.00

Sheet List		
Sheet Order	Sheet Number	Sheet Name
	F4.01	Site Plan
	F4.04	Unnamed
1	G-000.00	Project Introduction
2	A-000.00	Site Plan/ Plot Plan
3	A-001.00	Drawing Index and Abbreviations
4	A-002.00	Site Plan
5	A-003.00	Site Plan - Existing Vault Level
6	A-101.00	Site Plan
7	A-102.00	Project Plan
8	A-103.00	Structural & Foundation Plans
9	A-104.00	Reflected Ceiling and Site Lighting Plan
10	A-200.00	Elevations
11	A-301.00	Short Sections
12	A-302.00	Long Sections
13	A-500.00	Details
14	A-501.00	Window Details
15	A-600.00	Infrastructure Diagram
16	D-100.00	Demolition, Excavation and Planting Diagram
17	G-002.00	Rendered Views
18	G-003.00	Material Samples
19	L-1.01	Landscape Restoration Plan
20	L-1.02	Landscape Planting Plan
21	F1.00	Process Schematic
22	F2.00	Schematic
23	F3.00	Controls Ladder Logic Diagram
24	F3.01	Controls Ladder Logic Diagram
25	F3.10	Power Supply & Bonding Details
26	F4.00	Notes
27	S-001.00	General Notes
28	S-002.00	General Notes
29	S-003.00	General Notes
30	S-004.00	General Notes
31	S-005.00	General Wood Notes
32	SO-100.00	Lap Splice Schedules
33	S-100.00	Structural Plans II
34	S-101.00	Full Roof Plan
35	S-200.00	Building Sections and Details
36	S-300.00	Roof Details
37	FO-100.00	Structural Plans
38	FO-200.00	Typical Caisson Details and Schedule
39	FO-300.00	Typical Site Details
40	FO-301.00	Typical Concrete Slab Details
41	FO-302.00	Typical Concrete Slab Details
42	FO-400.00	Typical Wall Details
43	FO-500.00	Typical Grade Beam Details
44	FO-501.00	Typical Grade Beam Details
45	FO-502.00	Grade Beam Schedules
46	P-001.00	Plumbing Symbol List, Notes and Specifications
47	P-300.00	Plumbing Work in Connection with Police Memorial Plaza Pumps and Controllers Reolcation
48	P-301.01	Plumbing Work in Connection with Police Memorial Plaza Pumps and Controllers Reolcation
49	M-001.00	Mechanical Drawing List, Symbol Legend and Specifications
50	M-102.00	Mechanical Floor Plan
51	E-001.00	Electrical Symbol List, Notes, Drawing List and Specifications
52	E-002.00	Electrical Demolition Notes
53	E-100.00	Existing Electrical Services and Distribution Equipment Serving Police Plaza
54	E-200.00	Electrical Modification of Existing Electrical Service and Distribution Equipment Serving Police Plaza and Marine (Flood Resilience)
55	E-300.00	Electrical Work in Connection with Police Memorial Plaza Pumps and Controllers Relocation
56	E-400.00	Electrical Work in Connection with Police memorial Plaza pumps and Controllers Relocation Details
57	E-500.00	Electrical Work in Connection with Police Memorial Plaza pumps and Controllers Relocation Schedulues and Details
58	E-600.00	Electrical One Line Diagram for New utilities West and East Structures
59	E-700.00	Electrical New West and East Utility Structures Details

ABBREVIATIONS:

AC	AIR CONDITIONING
ACC	ACCESSIBLE
ADJ	ADJACENT
AFF	ABOVE FINISHED FLOOR
AHU	AIR HANDELING UNIT
ALUM	ALUMINUM
ALT	ALTERNATE
APPROX	APPROXIMATE
ARCH	ARCHITECT(URAL)
AUTO	AUTOMATIC
BLDG	BUILDING
BLKG	BLOCKING
CIP	CAST IN PLACE
CJ	CONTROL JOINT
CL	CENTERLINE
CLG	CEILING
CLO	CLOSET
CLR	CLEAR(ANCE)
CMU	CONCRETE MASONRY UNIT
COL	COLUMN
COMM	COMMUNICATION
CONC	CONCRETE
CONT	CONTINUOUS
DEMO	DEMOLISH / DEMOLITION
DEPT	DEPARTMENT
DIA	DIAMETER
DIAG	DIAGONAL
DIM	DIMENSION
DN	DOWN
EA	EACH
EJ	EXPANSION JOINT
ELEC	ELECTRICAL
EL	ELEVATION
ELEV	ELEVATOR
EMER	EMERGENCY
EQ	EQUAL
EQUIP	EQUIPMENT
EXH	EXHAUST
EXIST	EXISTING
EXP	EXPANSION
EXPD	EXPOSED
EXT	EXTERIOR
FD	FLOOR DRAIN
FDTN	FOUNDATION
FE	FIRE EXTINGUISHER
FIN	FINISH(ED)
FLR	FLOOR
FT	FOOT / FEET
FTG	FOOTING
FURN	FURNISH(ED) / FURNISHINGS
GA	GAUGE
GALV	GALVANIZED
GL	GLASS
GWB	GYPSUM WALL BOARD
GYP	GYPSUM
HDW	HARDWARE
HW	HOLLOW METAL
HORIZ	HORIZONTAL
HP	HIGH POINT
HPC	HIGH PERFORMANCE COATING
HR	HANDRAIL
HSS	HOLLOW STRUCTURAL SECTION
HT	HEIGHT
HVAC	HEATING-VENTILATING-AIR CONDITIONING
INST	INSTALL(ED)
INSUL	INSULATION
INT	INTERIOR
JT	JOINT
LAM	LAMINATED
LGT	LENGTH
LP	LOW POINT
LT	LIGHT
LYWT	LIGHTWEIGHT
MACH	MACHINE
MAS	MASONRY
MATL	MATERIAL
MAX	MAXIMUM
MECH	MECHANICAL
MFR	MANUFACTURER
MIN	MINIMUM
MISC	MISCELLANEOUS
MTL	METAL
NIC	NOT IN CONTRACT
NO	NUMBER
NOM	NOMINAL
NTS	NOT TO SCALE
OC	ON CENTER
OPP	OPPOSITE
PCC	PRECAST CONCRETE
PCF	POUNDS PER CUBIC FOOT
PERF	PERFORATE(D)
PLYWD	PLYWOOD
PREFAB	PREFABRICATED
PSF	POUNDS PER SQUARE FOOT
PSI	POUNDS PER SQUARE INCH
PLSHD	POLISHED
PNT	PAINT(ED)
QTY	QUANTITY
RAD	RADIUS
RCP	REFLECTED CEILING PLAN
REF	REFER TO / REFERENCE TO
REINF	REINFORCED
REQD	REQUIRED
REV	REVISED / REVISION
RFG	ROOFING
RM	ROOM
SECT	SECTION
SHT	SHEET
SIM	SIMILAR
SPEC	SPECIFY / SPECIFICATION
SQ	SQUARE
SST	STAINLESS STEEL
ST	STONE
STD	STANDARD
STL	STEEL
STOR	STORAGE
STRUCT	STRUCTURE / STRUCTURAL
SUSP	SUSPENDED
TBD	TO BE DETERMINED
TEMP	TEMPORARY
TEXT	TEXTURE
THK	THICK(NESS)
TOW	TOP OF WALL
TYP	TYPICAL
VIF	VERIFY IN FIELD
WD	WOOD
WT	WEIGHT

hMa
hanrahan Meyers architect,llp

ARCHITECT:
HANRAHAN MEYERS ARCHITECTS, LLP
6 MAIDEN LANE SUITE 510
NEW YORK, NY 10038
T: (212) 989-6026 F: (917) 591-9825

Cosentini

MEP ENGINEERS:
Cosentini Associates
Two Pennsylvania Plaza - Third Floor
NEW YORK, NY 10121
T: (212) 615-3760 F: (212) 615-3600

Thornton Tomasetti

STRUCTURAL ENGINEERS:
Thornton Tomasetti
51 Madison Avenue
NEW YORK, NY 10010
T: (917) 661-7800 F: (917) 661-7801

EK|A PLLC

LANDSCAPE ARCHITECTS:
Elizabeth Kennedy Landscape Architect, PLLC
Brooklyn Navy Yard Building 275 Room 202
63 Flushing Avenue Unit 264
BROOKLYN, NY 11205
T: (718) 569-8837 F: (718) 709-5885

PROJECT:

Kowsky Plaza Vaults

Battery Park City- North Cove

PROPERTY INFORMATION:

NOTES:

Rev No.	Description	Date
1	Adendum#1	10.05.15

DOB STAMPS AND SIGNATURE:

SEAL AND SIGNATURE:

DATE: 11/15/15

DRAWN BY: Author

CHECKED BY: Checker

SHEET TITLE:

Drawing Index and Abbreviations

SHEET NUMBER:

A-001.00

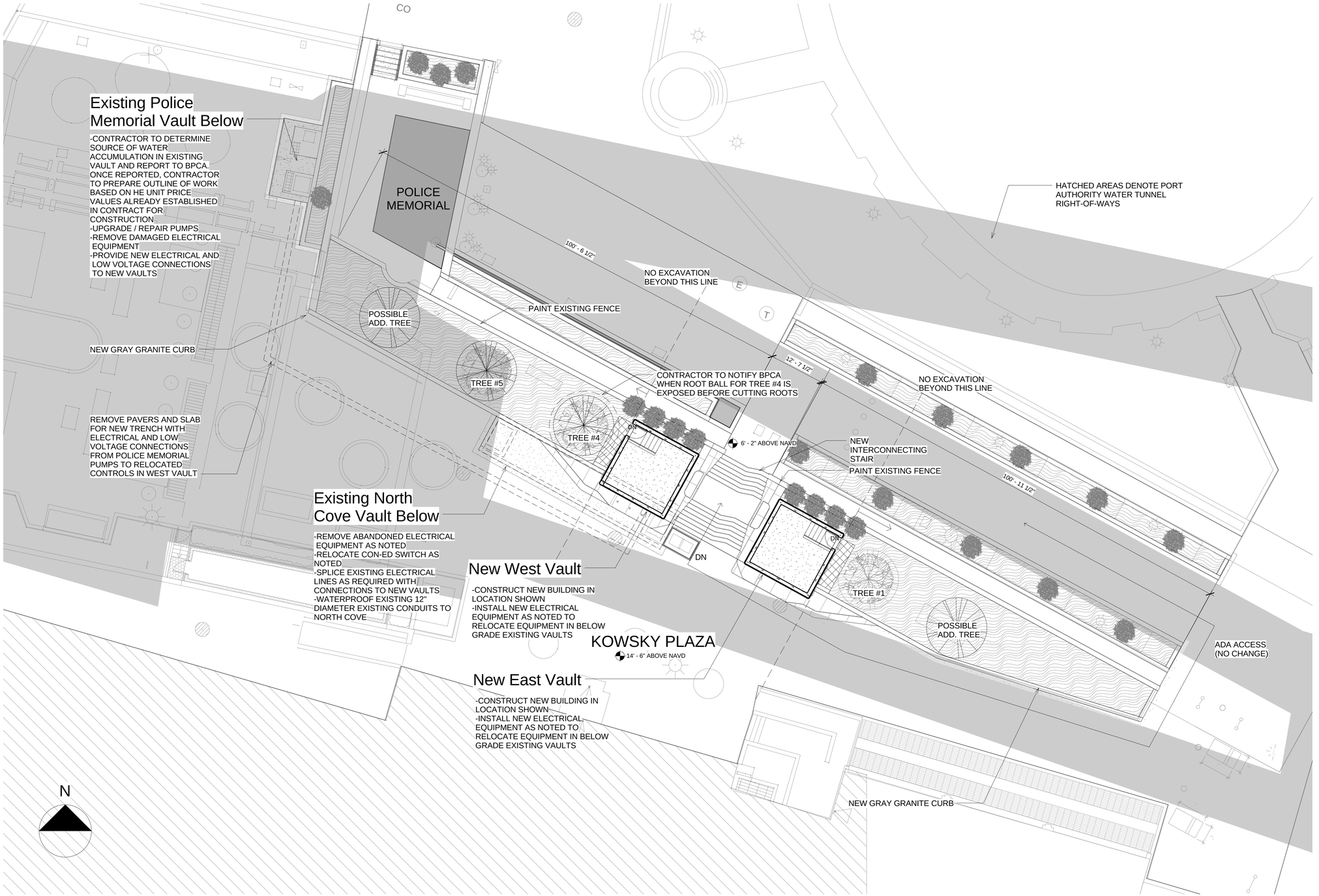

1 Site Plan
3/32" = 1'-0"

hMa
hanrahan Meyers architect,llp

ARCHITECT:
HANRAHAN MEYERS ARCHITECTS, LLP
6 MAIDEN LANE SUITE 510
NEW YORK, NY 10038
T: (212) 989-6026 F: (917) 591-9825

Cosentini

MEP ENGINEERS:
Cosentini Associates
Two Pennsylvania Plaza - Third Floor
NEW YORK, NY 10121
T: (212) 615-3760 F: (212) 615-3600

Thornton Tomasetti

STRUCTURAL ENGINEERS:
Thornton Tomasetti
51 Madison Avenue
NEW YORK, NY 10010
T: (917) 661-7800 F: (917) 661-7801

EK|A PLLC

LANDSCAPE ARCHITECTS:
Elizabeth Kennedy Landscape Architect, PLLC
Brooklyn Navy Yard Building 275 Room 202
63 Flushing Avenue Unit 264
BROOKLYN, NY 11205
T: (718) 569-8837 F: (718) 709-5885

PROJECT:

Kowsky Plaza Vaults

Battery Park City- North Cove

PROPERTY INFORMATION:

NOTES:

Rev No.	Description	Date
1	Adendum#1	10.05.15

DOB STAMPS AND SIGNATURE:

SEAL AND SIGNATURE:

DATE: 11/15/15

DRAWN BY: AS & SH

CHECKED BY: TH

SHEET TITLE:

Site Plan

SHEET NUMBER:

A-002.00

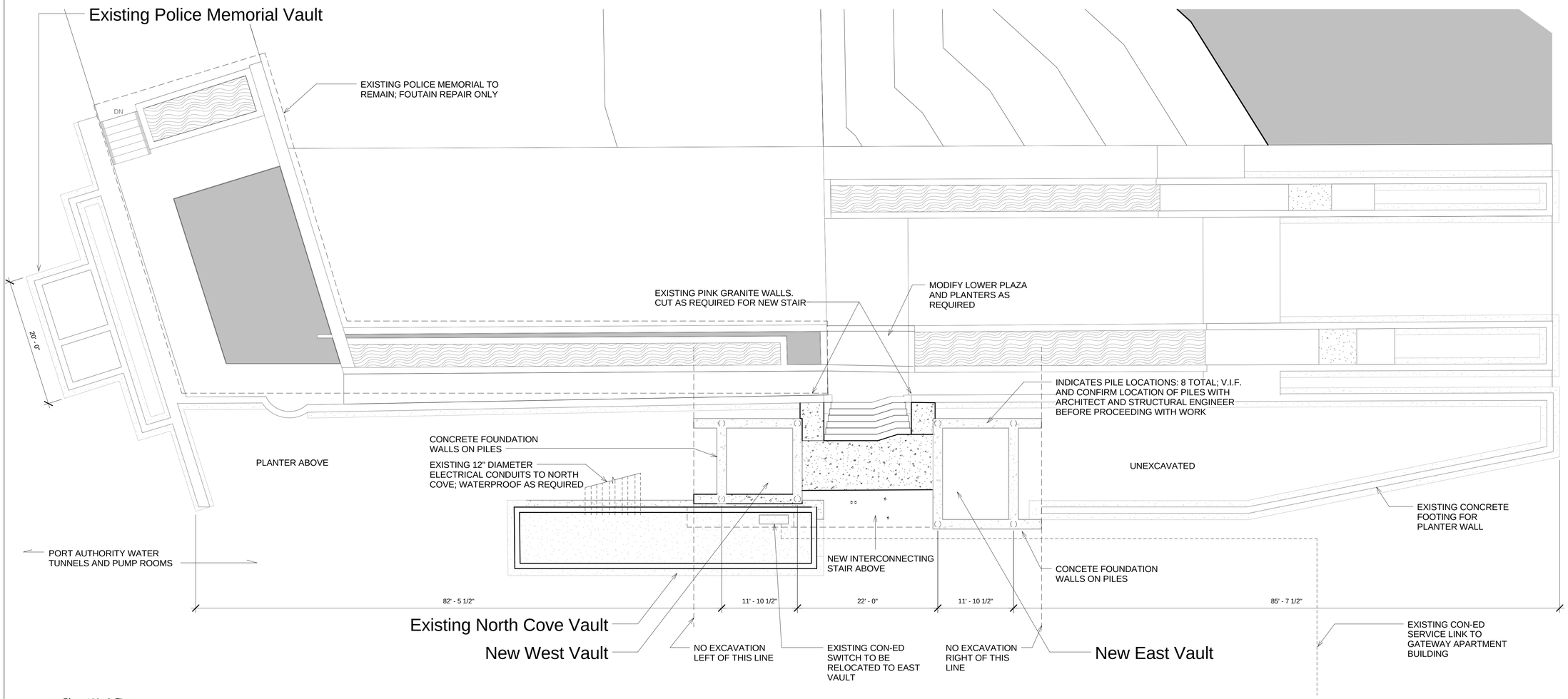

1 Plan at Vault Floors
1/8" = 1'-0"

hMa
hanrahan Meyers architect,llp

ARCHITECT:
HANRAHAN MEYERS ARCHITECTS, LLP
6 MAIDEN LANE SUITE 510
NEW YORK, NY 10038
T: (212) 989-6026 F: (917) 591-9825

Cosentini

MEP ENGINEERS:
Cosentini Associates
Two Pennsylvania Plaza - Third Floor
NEW YORK, NY 10121
T: (212) 615-3760 F: (212) 615-3600

Thornton Tomasetti

STRUCTURAL ENGINEERS:
Thornton Tomasetti
51 Madison Avenue
NEW YORK, NY 10010
T: (917) 661-7800 F: (917) 661-7801

EK|A PLLC

LANDSCAPE ARCHITECTS:
Elizabeth Kennedy Landscape Architect, PLLC
Brooklyn Navy Yard Building 275 Room 202
63 Flushing Avenue Unit 264
BROOKLYN, NY 11205
T: (718) 569-8837 F: (718) 709-5885

PROJECT:

Kowsky Plaza Vaults

Battery Park City- North Cove

PROPERTY INFORMATION:

NOTES:

Rev No.	Description	Date
1	Adendum#1	10.05.15

DOB STAMPS AND SIGNATURE:

SEAL AND SIGNATURE:

DATE: 11/15/15

DRAWN BY: SH/AS

CHECKED BY: TH

SHEET TITLE:

Site Plan - Existing Vault Level

SHEET NUMBER:

A-003.00

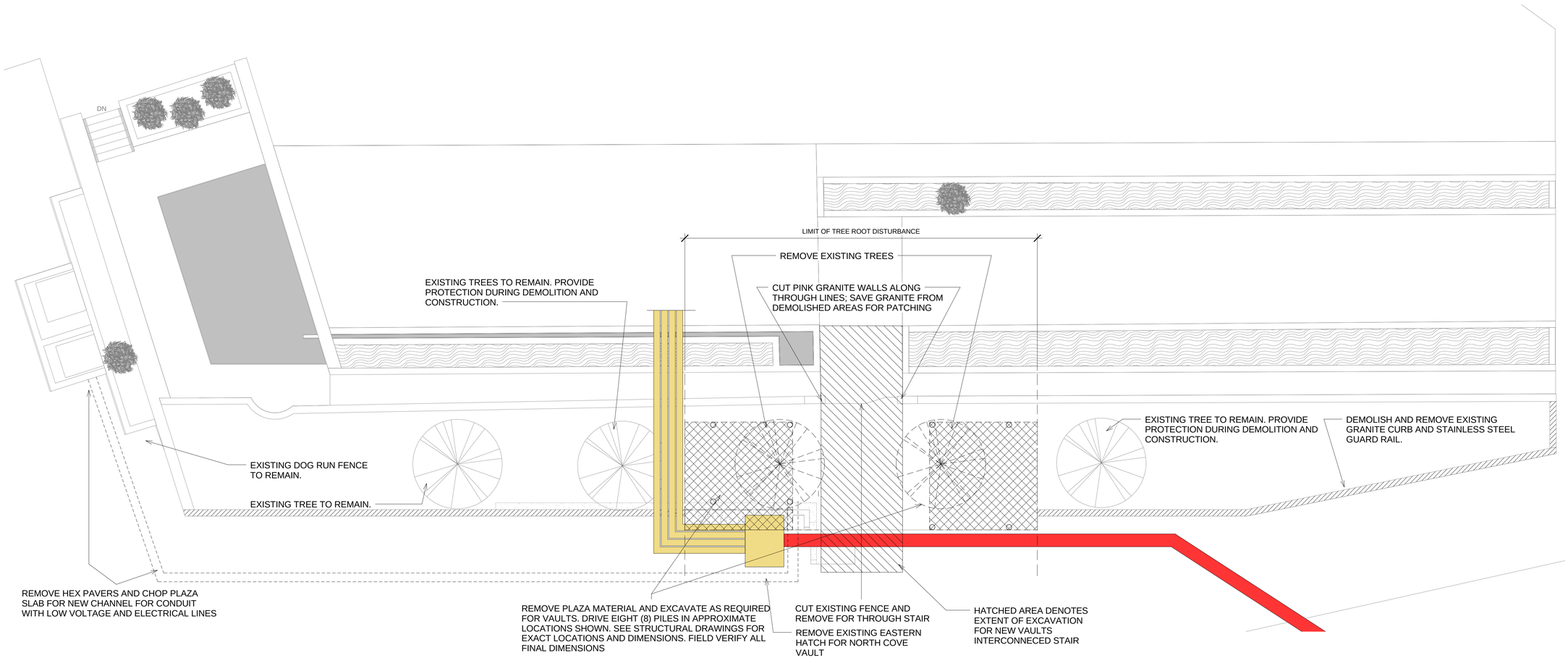

1 DEMO Existing Vault
1/8" = 1'-0"

hMa
hanrahan Meyers architect,llp

ARCHITECT:
HANRAHAN MEYERS ARCHITECTS, LLP
6 MAIDEN LANE SUITE 510
NEW YORK, NY 10038
T: (212) 989-6026 F: (917) 591-9825

Cosentini

MEP ENGINEERS:
Cosentini Associates
Two Pennsylvania Plaza - Third Floor
NEW YORK, NY 10121
T: (212) 615-3760 F: (212) 615-3600

Thornton Tomasetti

STRUCTURAL ENGINEERS:
Thornton Tomasetti
51 Madison Avenue
NEW YORK, NY 10010
T: (917) 661-7800 F: (917) 661-7801

EK|A PLLC

LANDSCAPE ARCHITECTS:
Elizabeth Kennedy Landscape Architect, PLLC
Brooklyn Navy Yard Building 275 Room 202
63 Flushing Avenue Unit 264
BROOKLYN, NY 11205
T: (718) 569-8837 F: (718) 709-5885

PROJECT:

Kowsky Plaza
Vaults

Battery Park City- North
Cove

PROPERTY INFORMATION:

NOTES:

Rev No.	Description	Date

DOB STAMPS AND SIGNATURE:

SEAL AND SIGNATURE:

DATE: 11/15/15

DRAWN BY: AS/SH

CHECKED BY: TH

SHEET TITLE:

Demolition, Excavation and Planting Diagram

SHEET NUMBER:

D-100.00

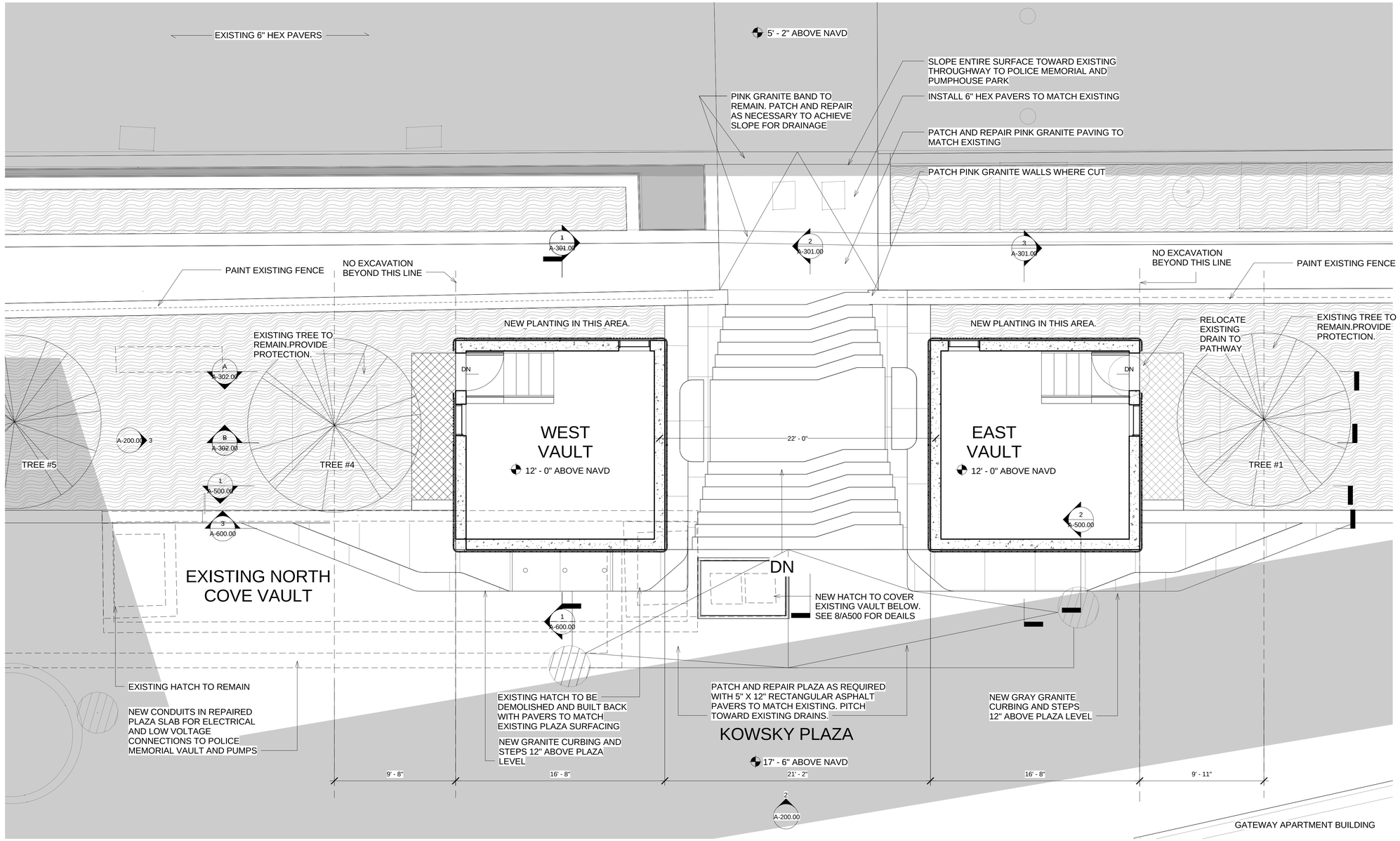

1 100 Year Flood -
1/4" = 1'-0"

hMa
hanrahan Meyers architect,llp

ARCHITECT:
HANRAHAN MEYERS ARCHITECTS, LLP
6 MAIDEN LANE SUITE 510
NEW YORK, NY 10038
T: (212) 989-6026 F: (917) 591-9825

Cosentini

MEP ENGINEERS:
Cosentini Associates
Two Pennsylvania Plaza - Third Floor
NEW YORK, NY 10121
T: (212) 615-3760 F: (212) 615-3600

Thornton Tomasetti

STRUCTURAL ENGINEERS:
Thornton Tomasetti
51 Madison Avenue
NEW YORK, NY 10010
T: (917) 661-7800 F: (917) 661-7801

EK|A PLLC

LANDSCAPE ARCHITECTS:
Elizabeth Kennedy Landscape Architect, PLLC
Brooklyn Navy Yard Building 275 Room 202
63 Flushing Avenue Unit 264
BROOKLYN, NY 11205
T: (718) 569-8837 F: (718) 709-5885

PROJECT:

Kowsky Plaza Vaults

Battery Park City- North Cove

PROPERTY INFORMATION:

NOTES:

Rev No.	Description	Date
1	Adendum#1	10.05.15

DOB STAMPS AND SIGNATURE:

SEAL AND SIGNATURE:

DATE: 11/15/15

DRAWN BY: AS/SH

CHECKED BY: TH

SHEET TITLE:

Site Plan

SHEET NUMBER:

A-101.00

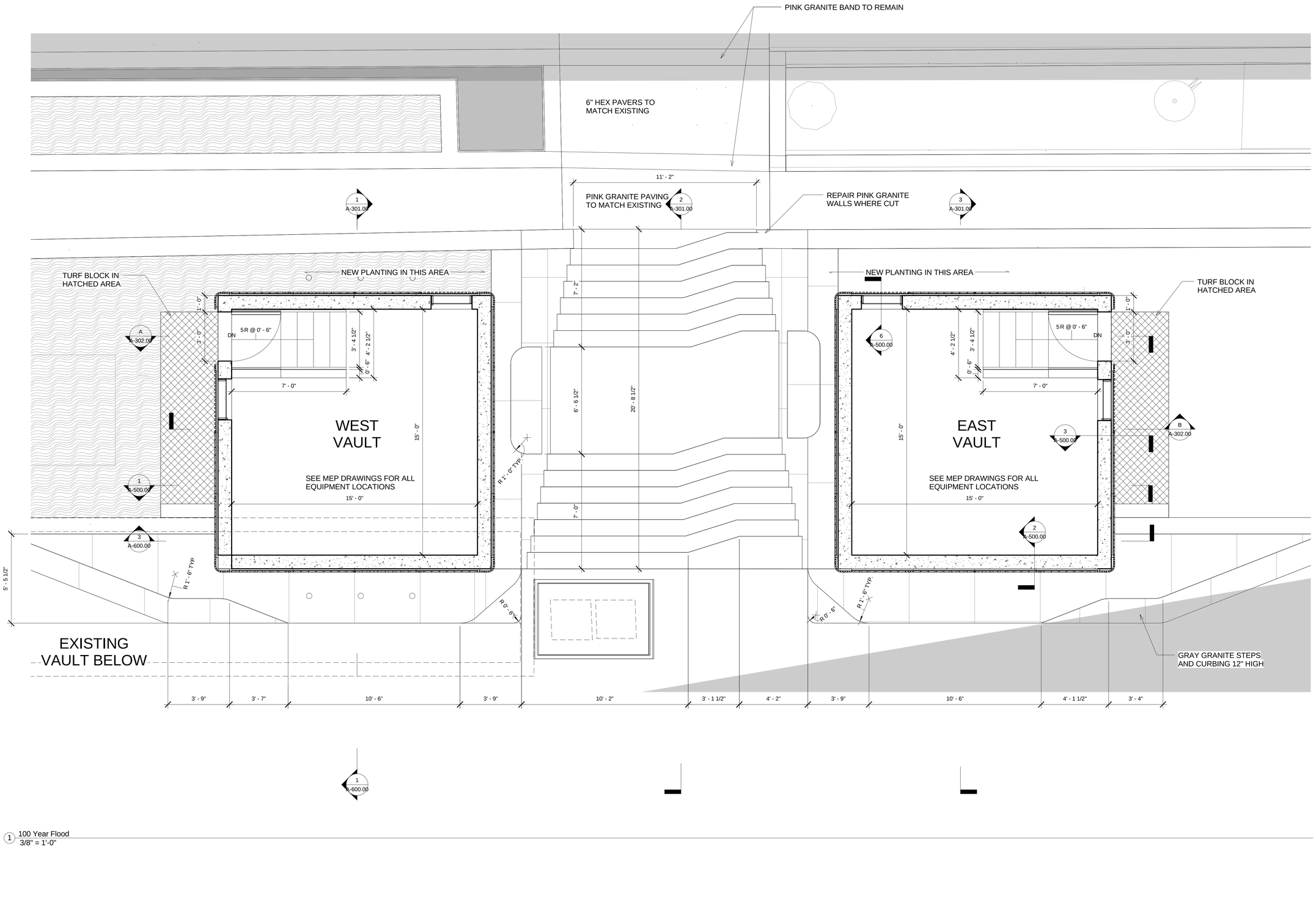

1 100 Year Flood
3/8" = 1'-0"

hMa
hanrahan Meyers architect,llp

ARCHITECT:
HANRAHAN MEYERS ARCHITECTS, LLP
6 MAIDEN LANE SUITE 510
NEW YORK, NY 10038
T: (212) 989-6026 F: (917) 591-9825

Cosentini

MEP ENGINEERS:
Cosentini Associates
Two Pennsylvania Plaza - Third Floor
NEW YORK, NY 10121
T: (212) 615-3760 F: (212) 615-3600

Thornton Tomasetti

STRUCTURAL ENGINEERS:
Thornton Tomasetti
51 Madison Avenue
NEW YORK, NY 10010
T: (917) 661-7800 F: (917) 661-7801

EK|A PLLC

LANDSCAPE ARCHITECTS:
Elizabeth Kennedy Landscape Architect, PLLC
Brooklyn Navy Yard Building 275 Room 202
63 Flushing Avenue Unit 264
BROOKLYN, NY 11205
T: (718) 569-8837 F: (718) 709-5885

PROJECT:

Kowsky Plaza Vaults

Battery Park City- North Cove

PROPERTY INFORMATION:

NOTES:

Rev No.	Description	Date
1	Addendum#1	10.05.15

DOB STAMPS AND SIGNATURE:

SEAL AND SIGNATURE:

DATE: 11/15/15

DRAWN BY: AS/SH

CHECKED BY: TH

SHEET TITLE:

Project Plan

SHEET NUMBER:

A-102.00

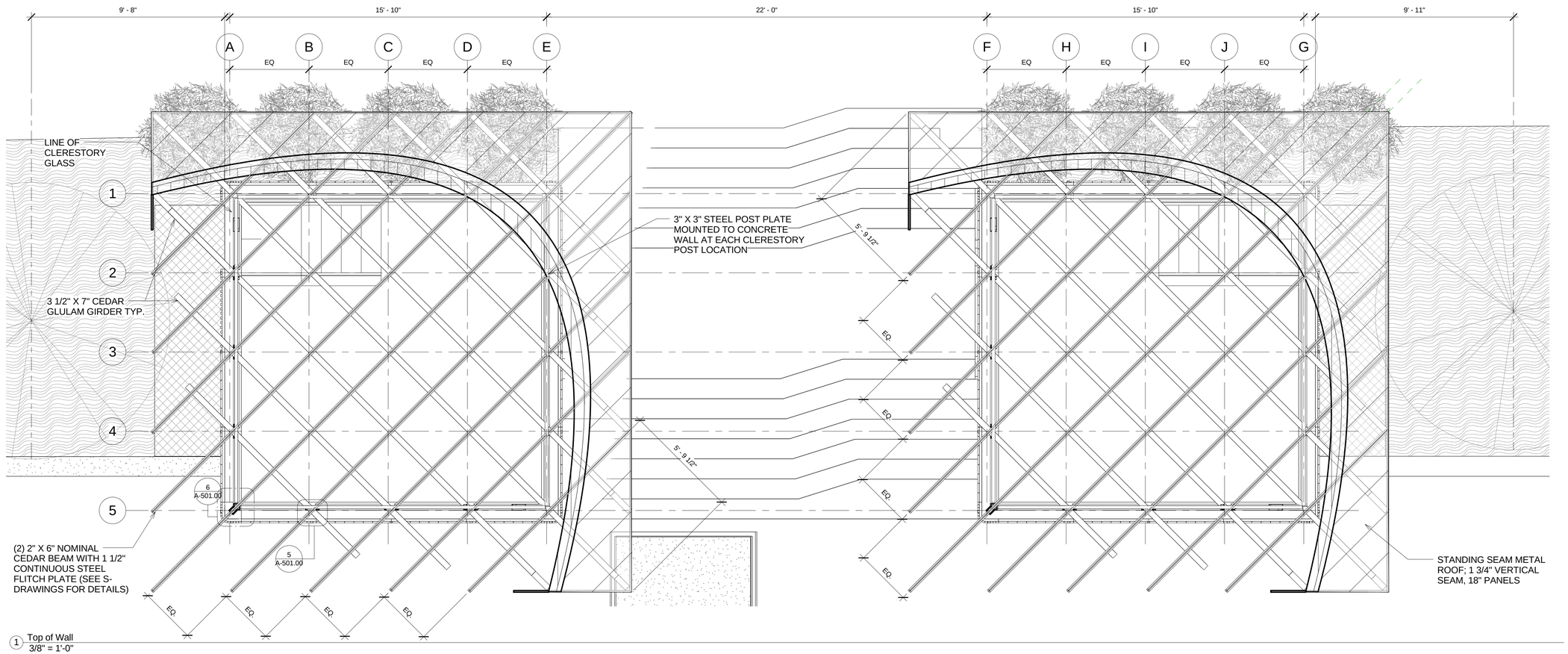

1 Top of Wall
3/8" = 1'-0"

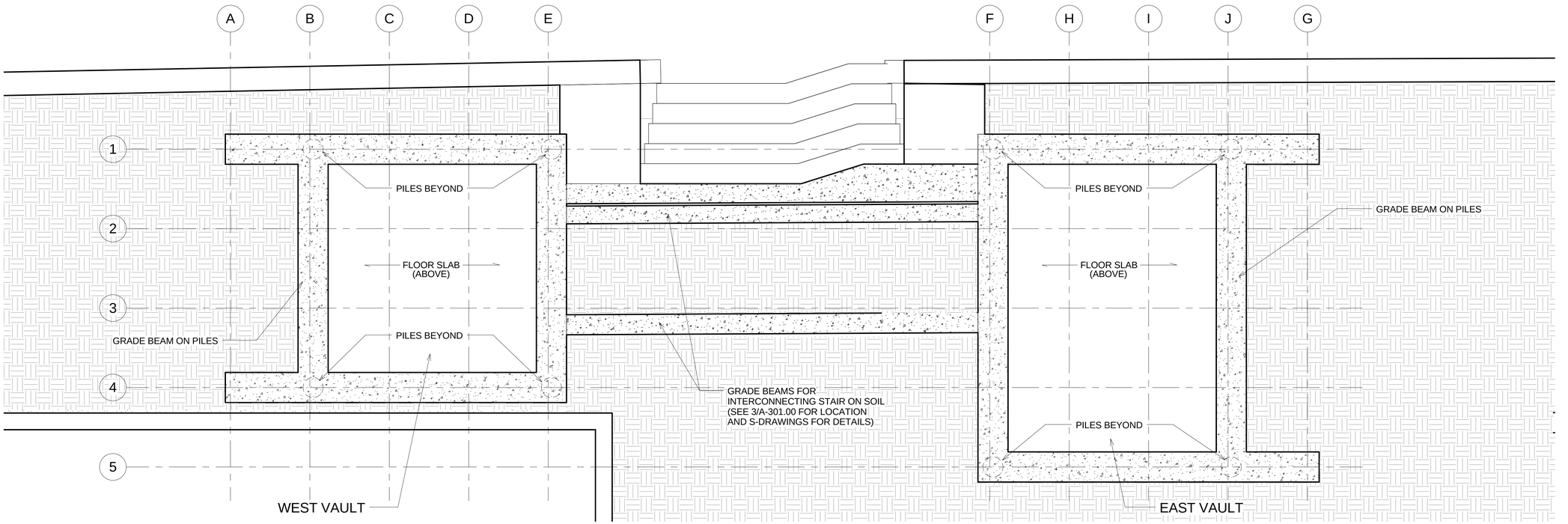

2 Plan at Vault Floors
3/8" = 1'-0"

hMa
hanrahan Meyers architect,llp

ARCHITECT:
HANRAHAN MEYERS ARCHITECTS, LLP
6 MAIDEN LANE SUITE 510
NEW YORK, NY 10038
T: (212) 989-6026 F: (917) 591-9825

Cosentini

MEP ENGINEERS:
Cosentini Associates
Two Pennsylvania Plaza - Third Floor
NEW YORK, NY 10121
T: (212) 615-3760 F: (212) 615-3600

Thornton Tomasetti

STRUCTURAL ENGINEERS:
Thornton Tomasetti
51 Madison Avenue
NEW YORK, NY 10010
T: (917) 661-7800 F: (917) 661-7801

EK|A PLLC

LANDSCAPE ARCHITECTS:
Elizabeth Kennedy Landscape Architect, PLLC
Brooklyn Navy Yard Building 275 Room 202
63 Flushing Avenue Unit 264
BROOKLYN, NY 11205
T: (718) 569-8837 F: (718) 709-5885

PROJECT:

Kowsky Plaza Vaults

Battery Park City- North Cove

PROPERTY INFORMATION:

NOTES:

Rev No.	Description	Date
1	Adendum#1	10.05.15

DOB STAMPS AND SIGNATURE:

SEAL AND SIGNATURE:

DATE: 11/15/15

DRAWN BY: AS/SH

CHECKED BY: TH

SHEET TITLE:

Structural & Foundation Plans

SHEET NUMBER:

A-103.00

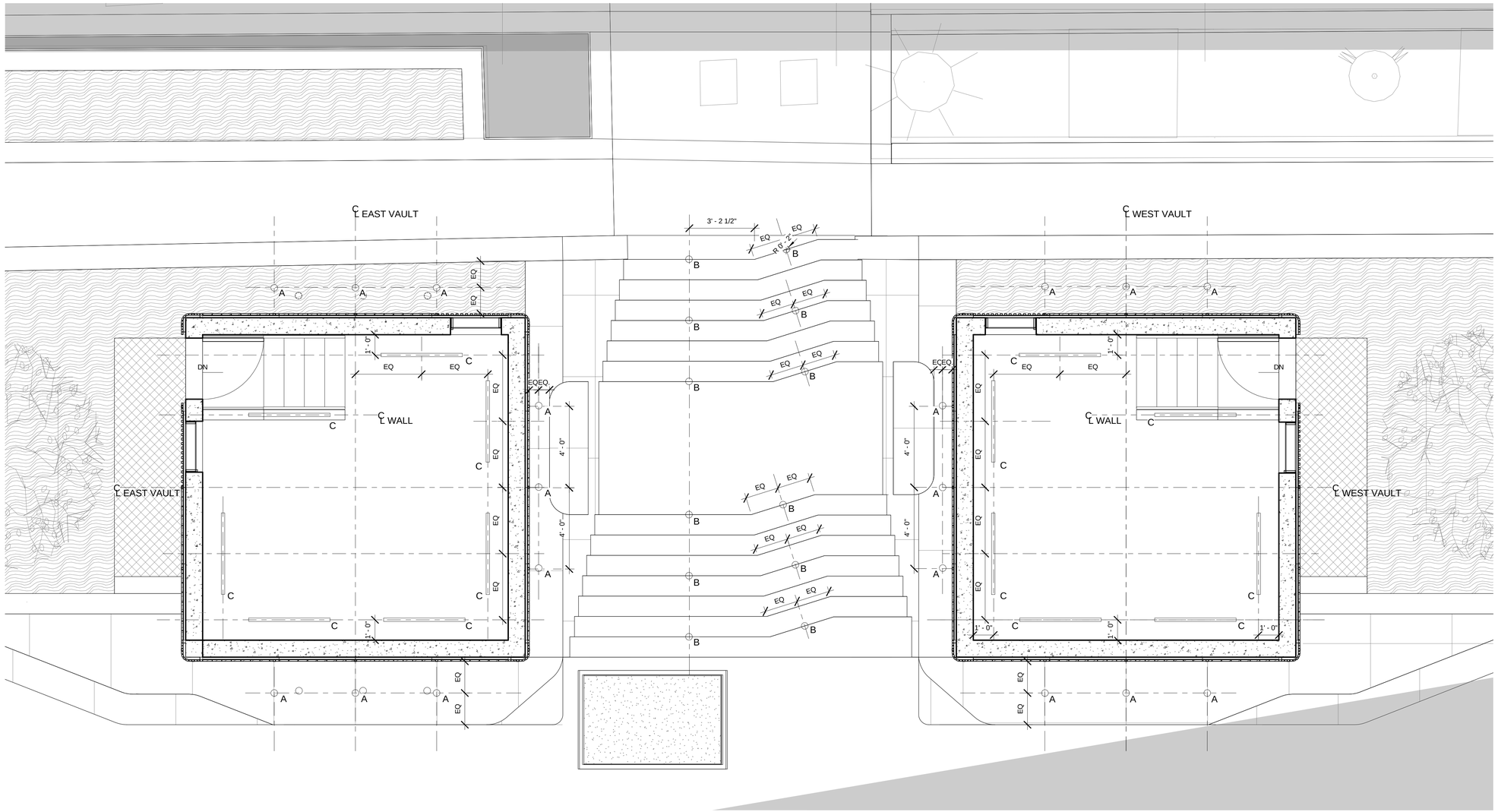

1 Site Lighting
3/8" = 1'-0"

Keynote	Description	Manufacturer	Model	Dimensions	Notes
A	DECK MOUNTED PLAZA LIGHT	DECO LIGHTING	SIG7-LED-1-9-W-25	4.09" X 4.25" X 3.54"	DECK MOUNT, SEE 8 AND 9/A500 FOR DETAILS
B	STEP LIGHT IN RISERS	DECO LIGHTING	SIG7-LED-2-9-W-15	2.72" X 3.81" X 2.36"	FLUSH MOUNT IN RISER, SEE 7/A500
C	UPTURNED FLOURESCENT LIGHT	BARTCO LIGHTING	BFLSA-28/120/DL	1.95" X 1" X 46.06"	

hMa
hanrahan Meyers architect,llp

ARCHITECT:
HANRAHAN MEYERS ARCHITECTS, LLP
6 MAIDEN LANE SUITE 510
NEW YORK, NY 10038
T: (212) 989-6026 F: (917) 591-9825

Cosentini

MEP ENGINEERS:
Cosentini Associates
Two Pennsylvania Plaza - Third Floor
NEW YORK, NY 10121
T: (212) 615-3760 F: (212) 615-3600

Thornton Tomasetti

STRUCTURAL ENGINEERS:
Thornton Tomasetti
51 Madison Avenue
NEW YORK, NY 10010
T: (917) 661-7800 F: (917) 661-7801

EK|A PLLC

LANDSCAPE ARCHITECTS:
Elizabeth Kennedy Landscape Architect, PLLC
Brooklyn Navy Yard Building 275 Room 202
63 Flushing Avenue Unit 264
BROOKLYN, NY 11205
T: (718) 569-8837 F: (718) 709-5885

PROJECT:

Kowsky Plaza
Vaults

Battery Park City- North
Cove

PROPERTY INFORMATION:

NOTES:

Rev No.	Description	Date
1	Adendum#1	10.05.15

DOB STAMPS AND SIGNATURE:

SEAL AND SIGNATURE:

DATE: 11/15/15

DRAWN BY: SH/AS

CHECKED BY: TH

SHEET TITLE:

Reflected
Ceiling and
Site Lighting
Plan

SHEET NUMBER:

A-104.00

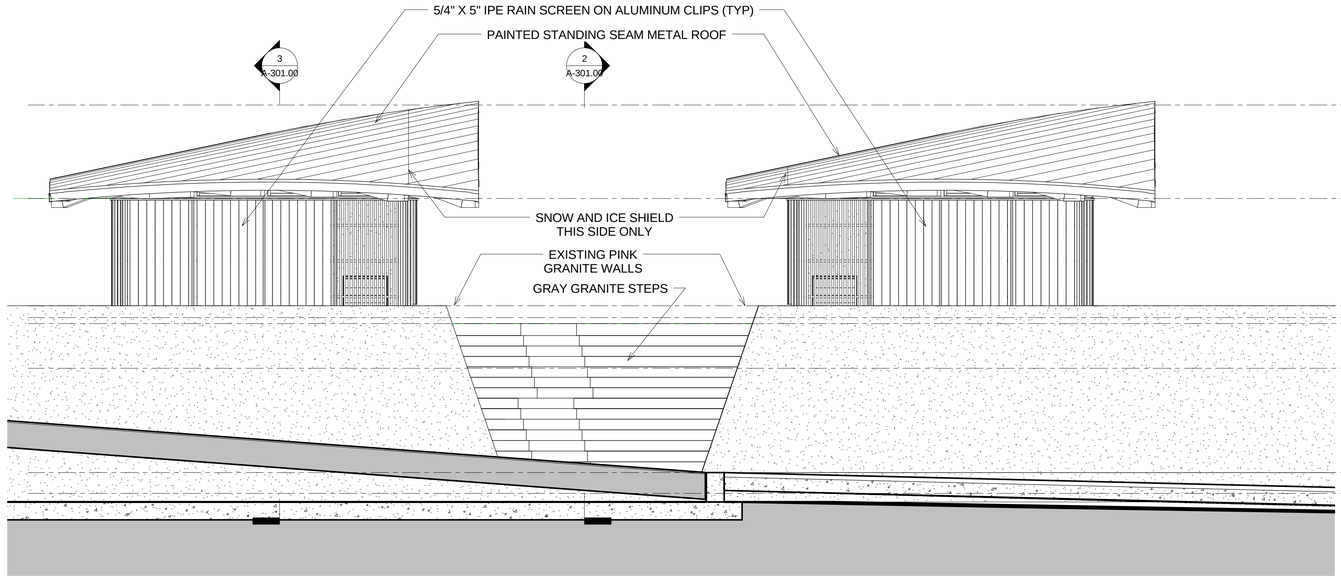

1 North
1/4" = 1'-0"

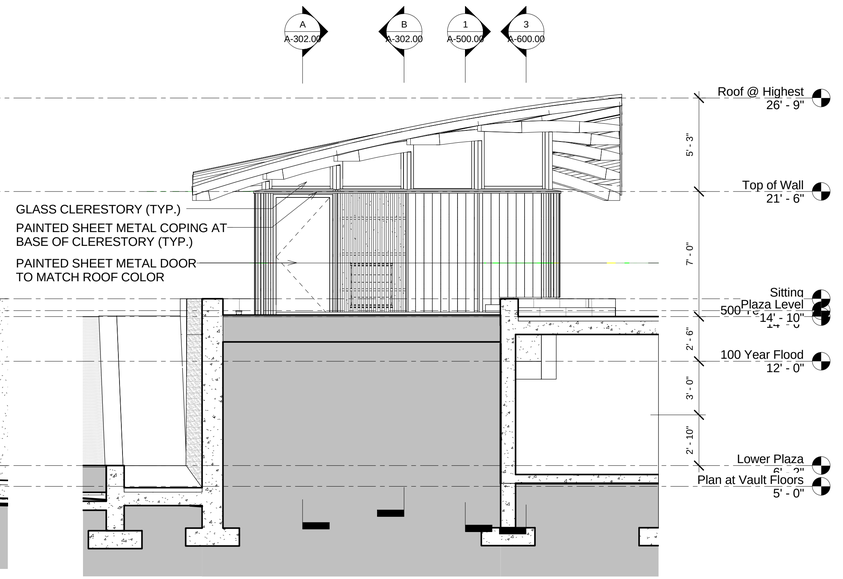

3 West
1/4" = 1'-0"

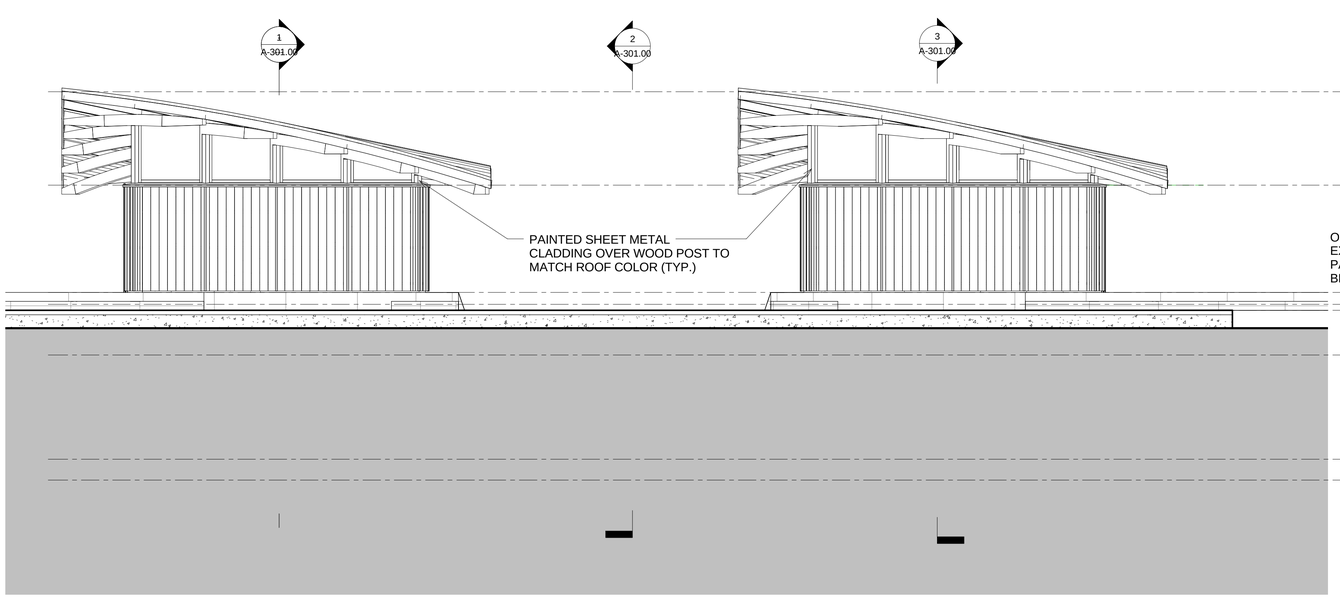

2 South
1/4" = 1'-0"

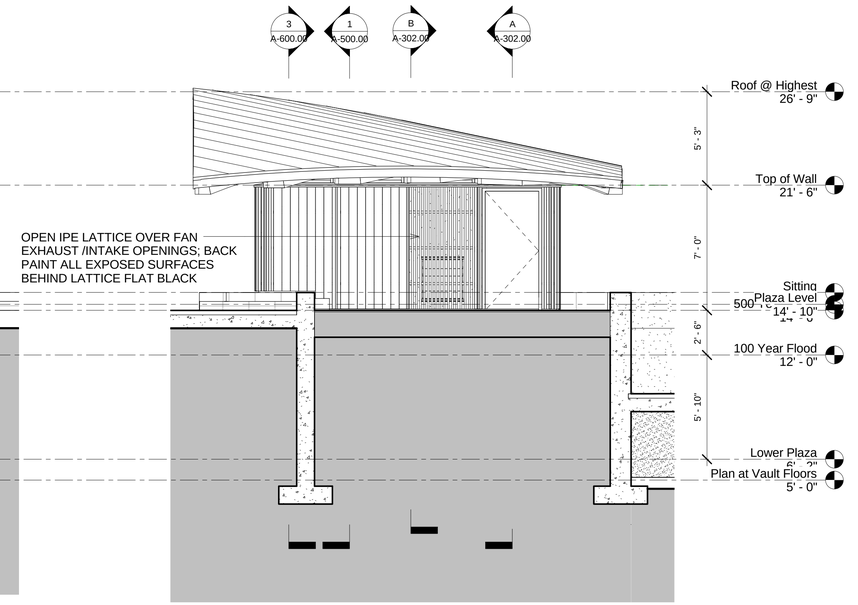

4 Elevation 1 - a
1/4" = 1'-0"

hMa
hanrahan Meyers architect,llp

ARCHITECT:
HANRAHAN MEYERS ARCHITECTS, LLP
6 MAIDEN LANE SUITE 510
NEW YORK, NY 10038
T: (212) 989-6026 F: (917) 591-9825

Cosentini

MEP ENGINEERS:
Cosentini Associates
Two Pennsylvania Plaza - Third Floor
NEW YORK, NY 10121
T: (212) 615-3760 F: (212) 615-3600

Thornton Tomasetti

STRUCTURAL ENGINEERS:
Thornton Tomasetti
51 Madison Avenue
NEW YORK, NY 10010
T: (917) 661-7800 F: (917) 661-7801

EKLA PLLC

LANDSCAPE ARCHITECTS:
Elizabeth Kennedy Landscape Architect, PLLC
Brooklyn Navy Yard Building 275 Room 202
63 Flushing Avenue Unit 264
BROOKLYN, NY 11205
T: (718) 569-8837 F: (718) 709-5885

PROJECT:

Kowsky Plaza
Vaults

Battery Park City- North
Cove

PROPERTY INFORMATION:

NOTES:

Rev No.	Description	Date

DOB STAMPS AND SIGNATURE:

SEAL AND SIGNATURE:

DATE: 11/15/15

DRAWN BY: AS/SH

CHECKED BY: TH

SHEET TITLE:

Elevations

SHEET NUMBER:

A-200.00

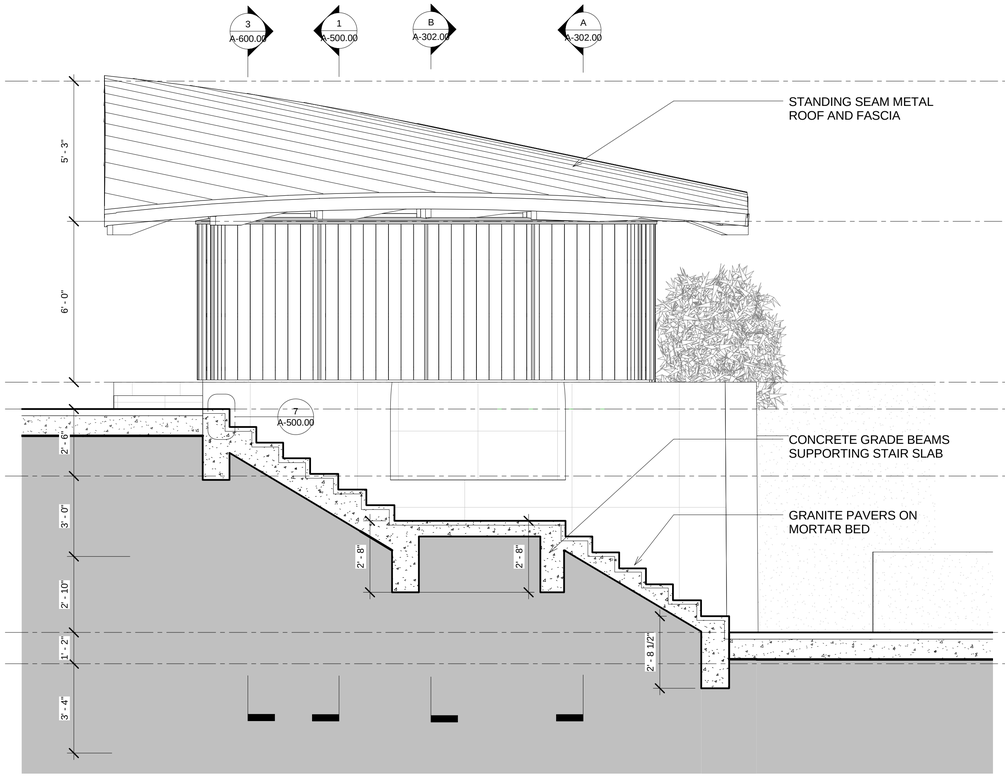

2 Section 10
3/8" = 1'-0"

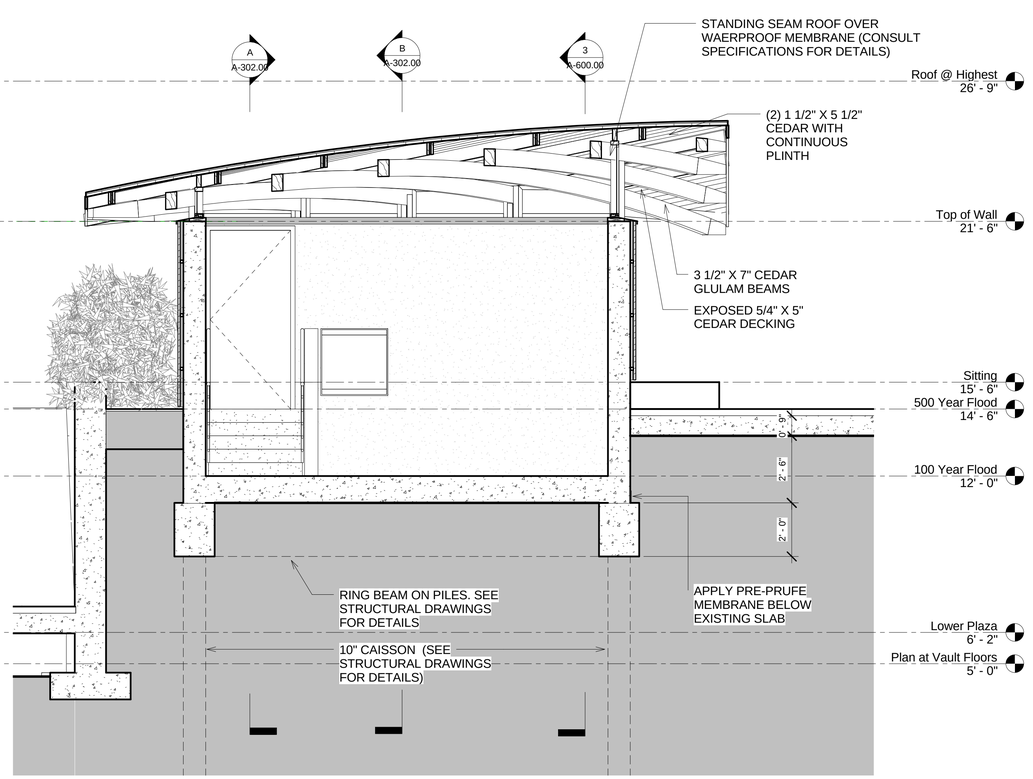

3 Section 6
3/8" = 1'-0"

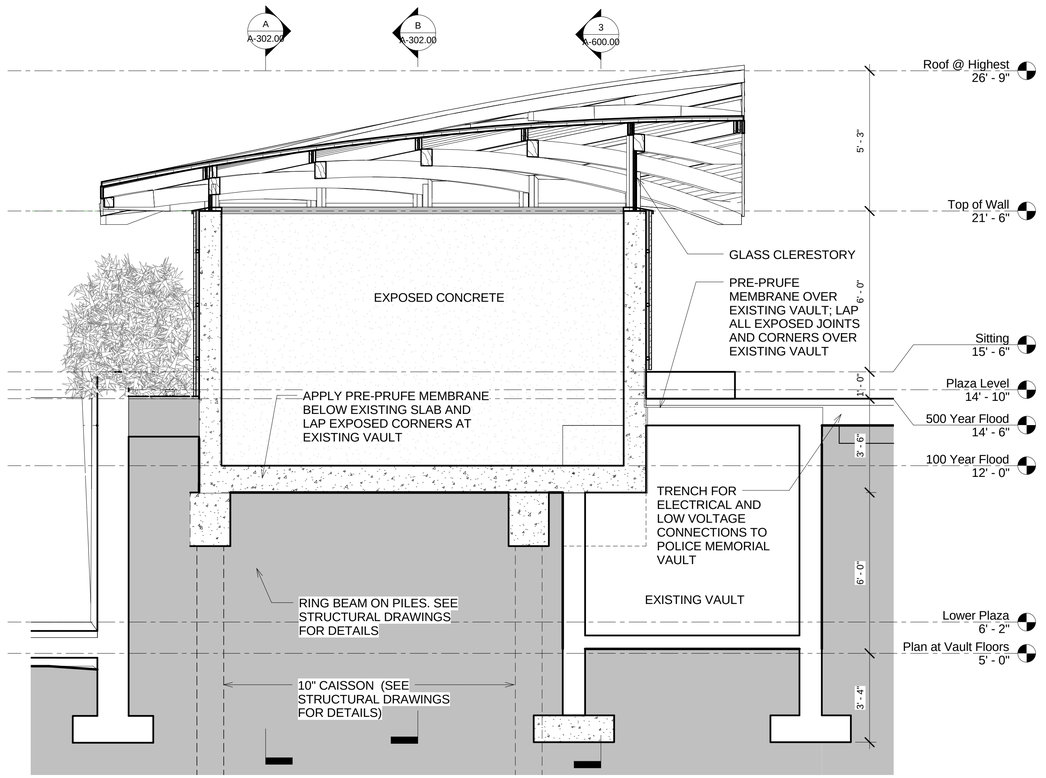

1 Section 4
3/8" = 1'-0"

hMa
hanrahan Meyers architect,llp

ARCHITECT:
HANRAHAN MEYERS ARCHITECTS, LLP
6 MAIDEN LANE SUITE 510
NEW YORK, NY 10038
T: (212) 989-6026 F: (917) 591-9825

Cosentini

MEP ENGINEERS:
Cosentini Associates
Two Pennsylvania Plaza - Third Floor
NEW YORK, NY 10121
T: (212) 615-3760 F: (212) 615-3600

Thornton Tomasetti

STRUCTURAL ENGINEERS:
Thornton Tomasetti
51 Madison Avenue
NEW YORK, NY 10010
T: (917) 661-7800 F: (917) 661-7801

EK|A PLLC

LANDSCAPE ARCHITECTS:
Elizabeth Kennedy Landscape Architect, PLLC
Brooklyn Navy Yard Building 275 Room 202
63 Flushing Avenue Unit 264
BROOKLYN, NY 11205
T: (718) 569-8837 F: (718) 709-5885

PROJECT:

Kowsky Plaza
Vaults

Battery Park City- North
Cove

PROPERTY INFORMATION:

NOTES:

Rev No.	Description	Date

DOB STAMPS AND SIGNATURE:

SEAL AND SIGNATURE:

DATE: 11/15/15

DRAWN BY: AS/SH

CHECKED BY: TH

SHEET TITLE:

Short Sections

SHEET NUMBER:

A-301.00

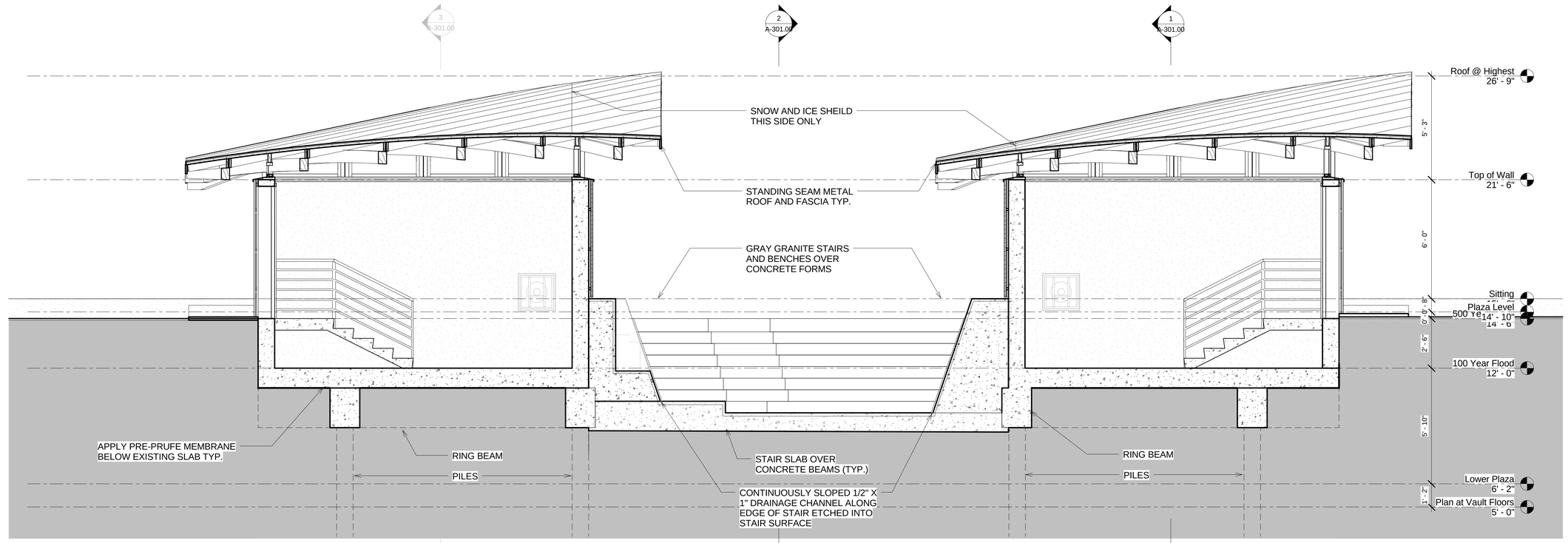

A Section A
3/8" = 1'-0"

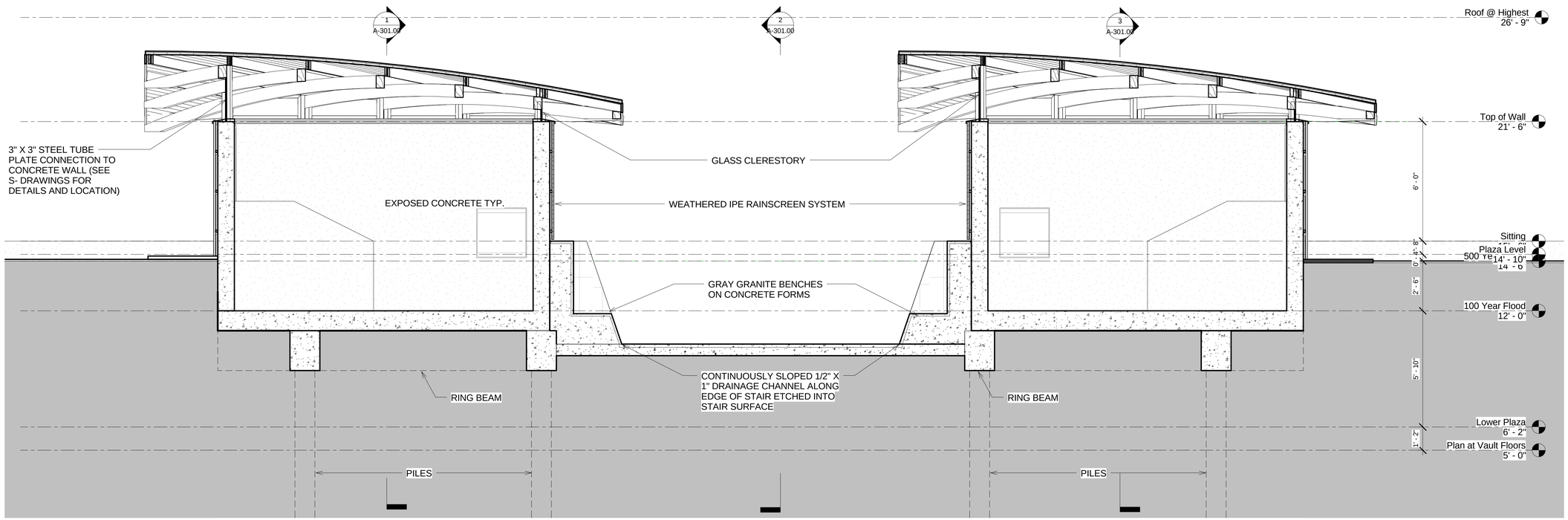

B Section B
3/8" = 1'-0"

hMa
hanrahan Meyers architect,llp

ARCHITECT:
HANRAHAN MEYERS ARCHITECTS, LLP
6 MAIDEN LANE SUITE 510
NEW YORK, NY 10038
T: (212) 989-6026 F: (917) 591-9825

Cosentini

MEP ENGINEERS:
Cosentini Associates
Two Pennsylvania Plaza - Third Floor
NEW YORK, NY 10121
T: (212) 615-3760 F: (212) 615-3600

Thornton Tomasetti

STRUCTURAL ENGINEERS:
Thornton Tomasetti
51 Madison Avenue
NEW YORK, NY 10010
T: (917) 661-7800 F: (917) 661-7801

EK|A PLLC

LANDSCAPE ARCHITECTS:
Elizabeth Kennedy Landscape Architect, PLLC
Brooklyn Navy Yard Building 275 Room 202
63 Flushing Avenue Unit 264
BROOKLYN, NY 11205
T: (718) 569-8837 F: (718) 709-5885

PROJECT:

Kowsky Plaza
Vaults

Battery Park City- North
Cove

PROPERTY INFORMATION:

NOTES:

Rev No.	Description	Date
1	Adendum#1	10.05.15

DOB STAMPS AND SIGNATURE:

SEAL AND SIGNATURE:

DATE: 11/15/15
DRAWN BY: AS/SH
CHECKED BY: TH

SHEET TITLE:
Long Sections

SHEET NUMBER:

A-302.00

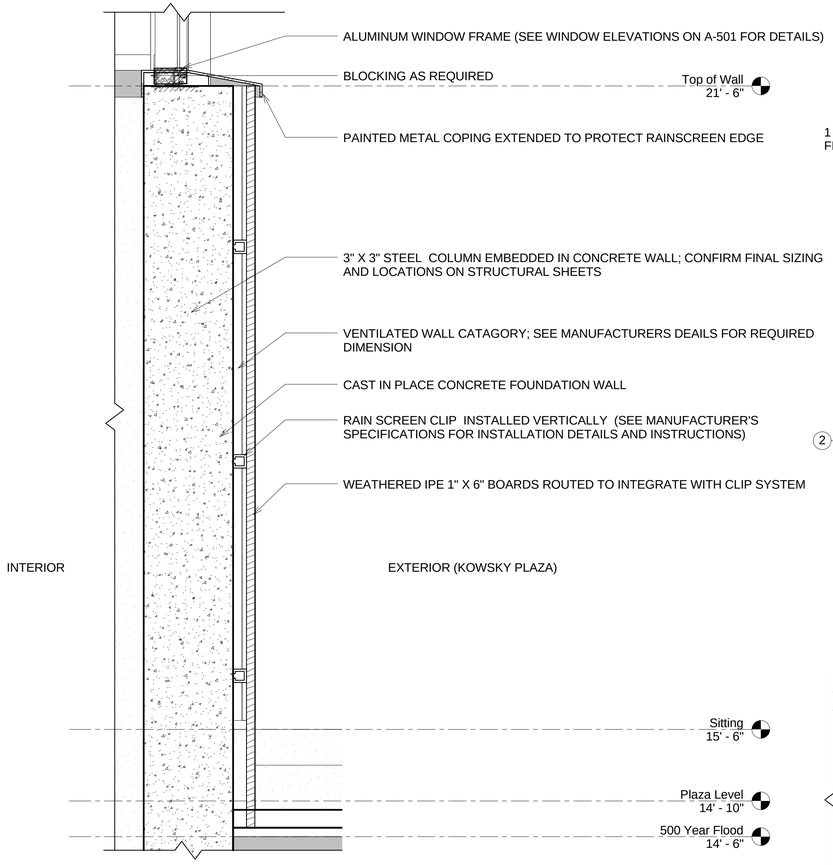

1 Wall Detail
1 1/2" = 1'-0"

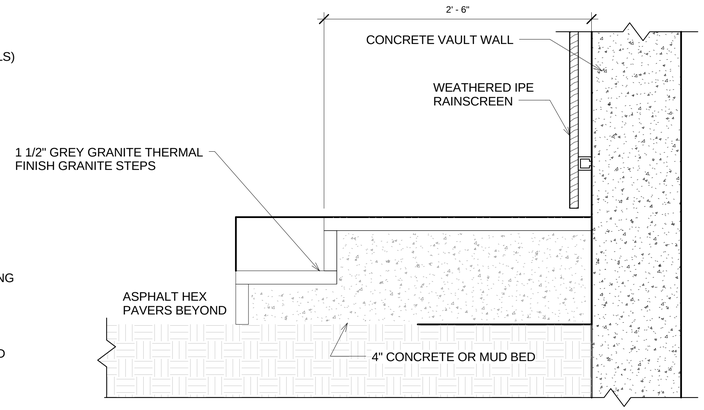

2 Typical Stair and Curbing Detail
1 1/2" = 1'-0"

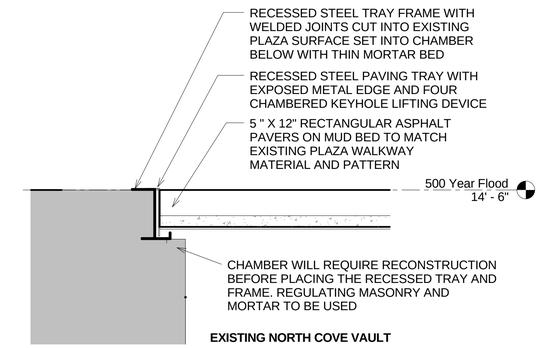

5 Recessed Paving Tray
1 1/2" = 1'-0"

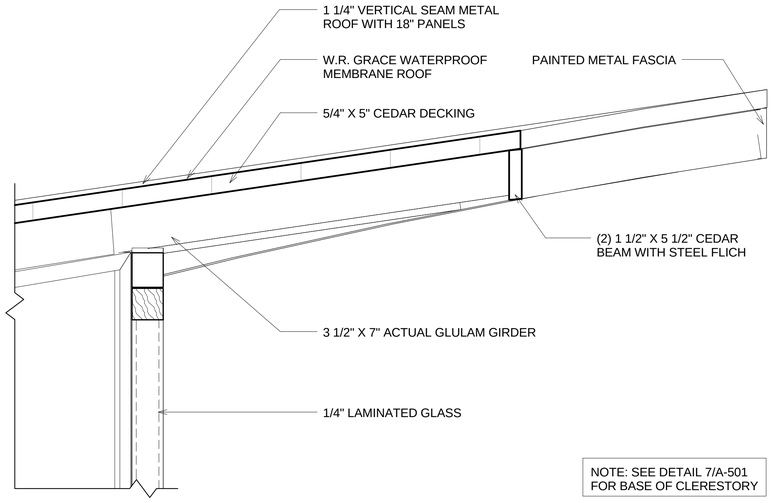

NOTE: SEE DETAIL 7/A-501
FOR BASE OF CLERESTORY

4 Post to Beam Connection
1 1/2" = 1'-0"

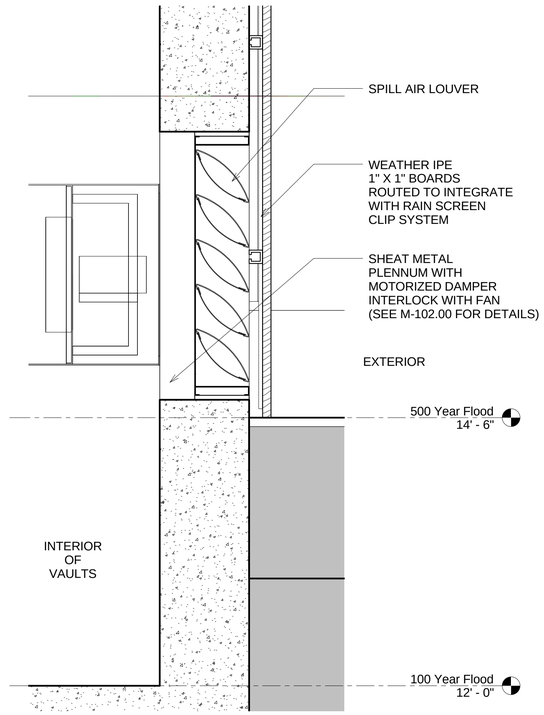

6 Wall Mounted Fan Detail
1 1/2" = 1'-0"

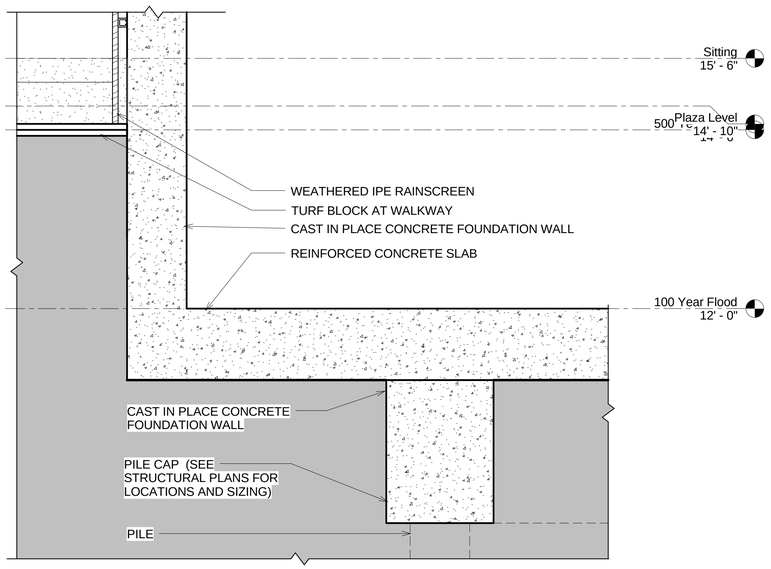

3 Floor Detail
1" = 1'-0"

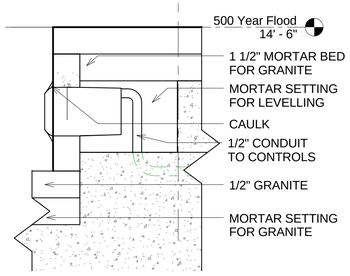

7 Fixture Mounting Detail on Stair Riser
3" = 1'-0"

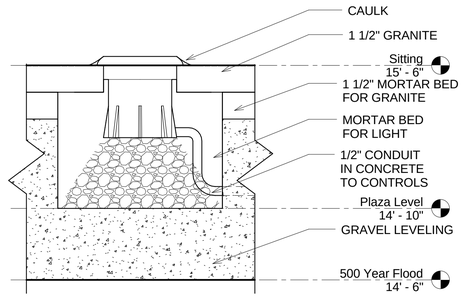

8 Fixture Mounting Detail on Stair Landing
3" = 1'-0"

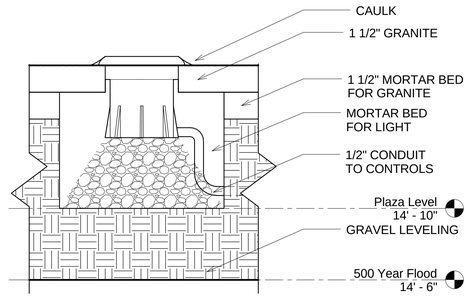

9 Fixture Mounting Detail on Dirt
3" = 1'-0"

hMa
hanrahan Meyers architect,llp

ARCHITECT:
HANRAHAN MEYERS ARCHITECTS, LLP
6 MAIDEN LANE SUITE 510
NEW YORK, NY 10038
T: (212) 989-6026 F: (917) 591-9825

Cosentini

MEP ENGINEERS:
Cosentini Associates
Two Pennsylvania Plaza - Third Floor
NEW YORK, NY 10121
T: (212) 615-3760 F: (212) 615-3600

Thornton Tomasetti

STRUCTURAL ENGINEERS:
Thornton Tomasetti
51 Madison Avenue
NEW YORK, NY 10010
T: (917) 661-7800 F: (917) 661-7801

EK|A PLLC

LANDSCAPE ARCHITECTS:
Elizabeth Kennedy Landscape Architect, PLLC
Brooklyn Navy Yard Building 275 Room 202
63 Flushing Avenue Unit 264
BROOKLYN, NY 11205
T: (718) 569-8837 F: (718) 709-5885

PROJECT:

Kowsky Plaza Vaults

Battery Park City- North Cove

PROPERTY INFORMATION:

NOTES:

Rev No.	Description	Date
1	Adendum#1	10.05.15

DOB STAMPS AND SIGNATURE:

SEAL AND SIGNATURE:

DATE: 11/15/15

DRAWN BY: AS/SH

CHECKED BY: TH

SHEET TITLE:

Details

SHEET NUMBER:

A-500.00

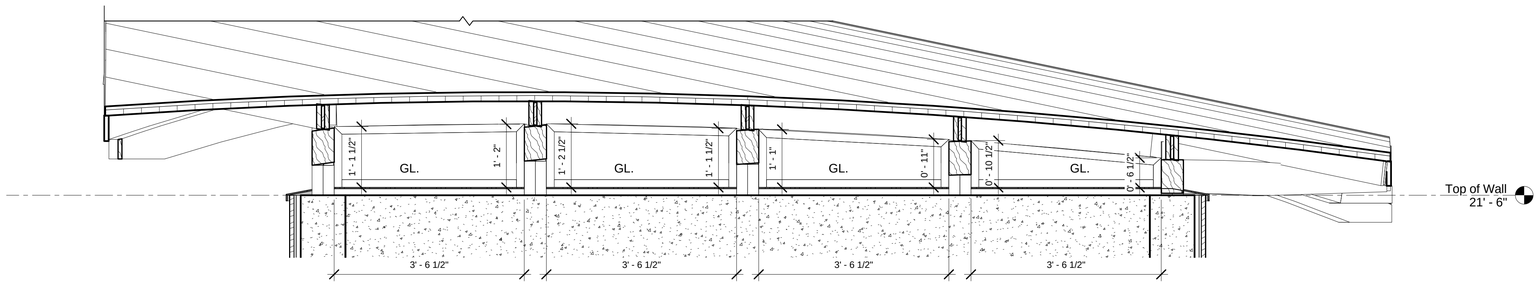

1 Windows East
3/4" = 1'-0"

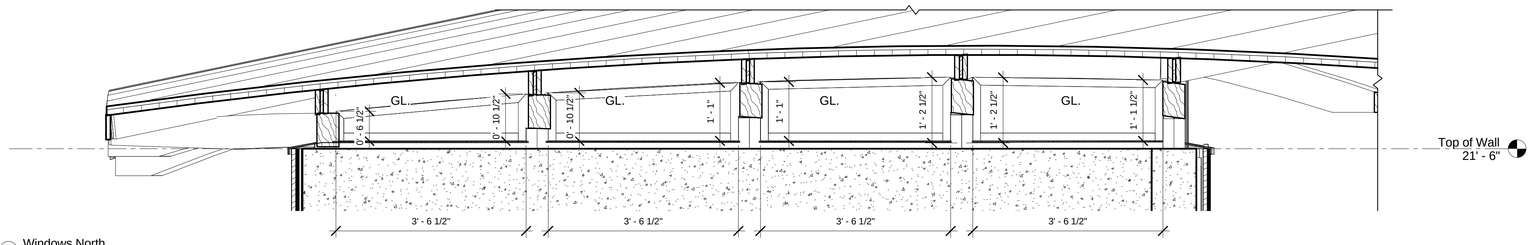

2 Windows North
3/4" = 1'-0"

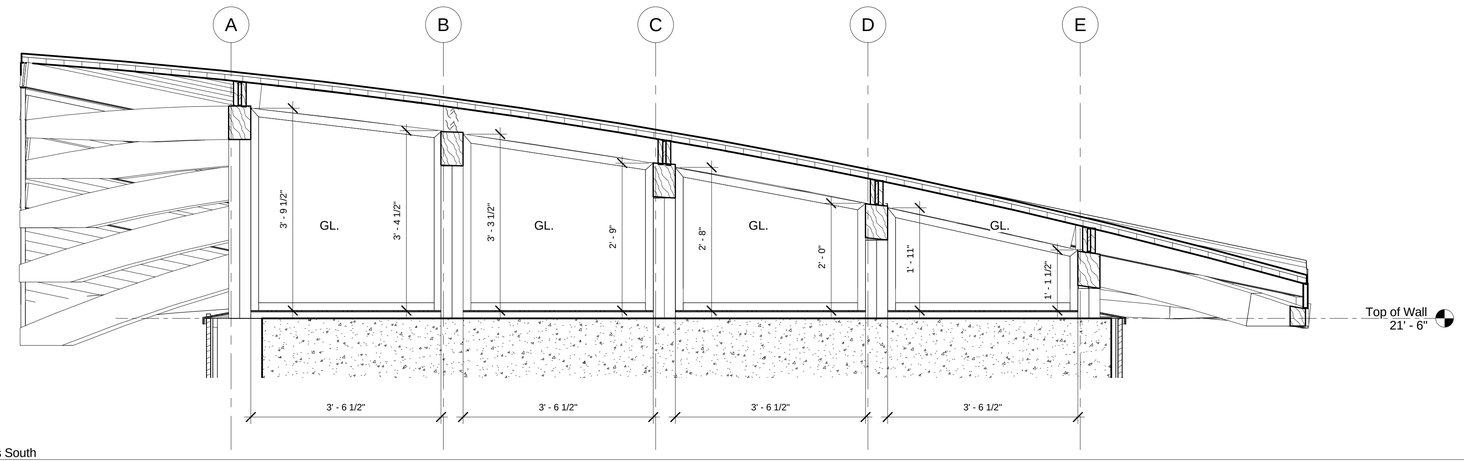

3 Windows South
3/4" = 1'-0"

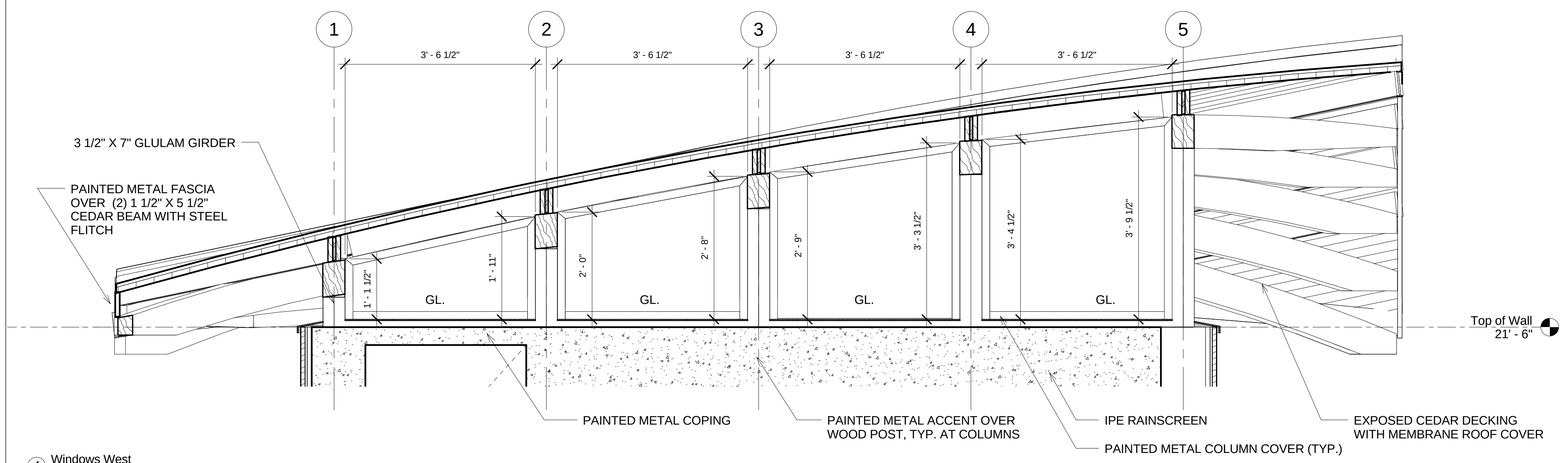

4 Windows West
3/4" = 1'-0"

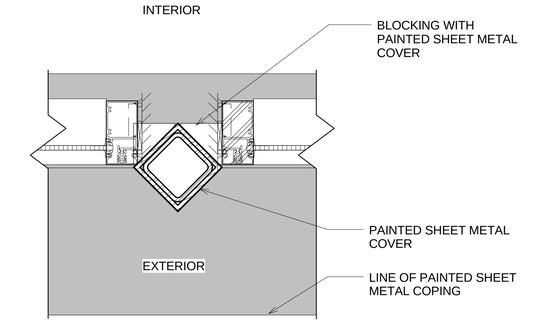

5 Window Plan Detail Typ.
3" = 1'-0"

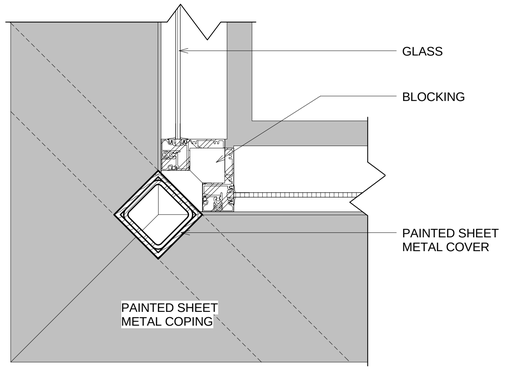

6 Window Plan Detail at Corner
3" = 1'-0"

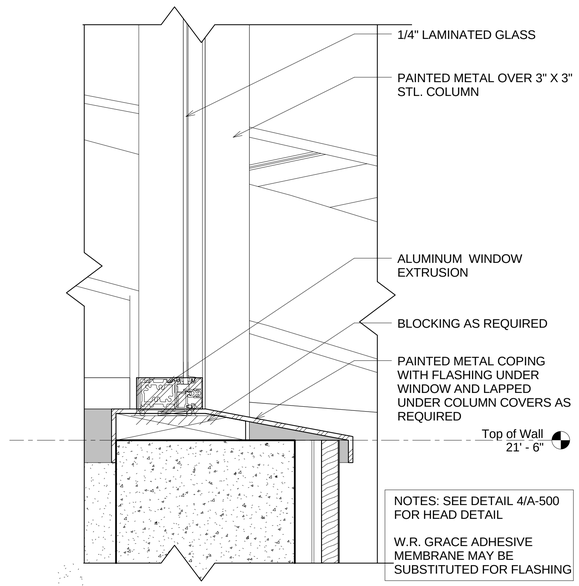

7 Window Sill and Head
3" = 1'-0"

hMa
hanrahan Meyers architect,llp

ARCHITECT:
HANRAHAN MEYERS ARCHITECTS, LLP
6 MAIDEN LANE SUITE 510
NEW YORK, NY 10038
T: (212) 989-6026 F: (917) 591-9825

Cosentini

MEP ENGINEERS:
Cosentini Associates
Two Pennsylvania Plaza - Third Floor
NEW YORK, NY 10121
T: (212) 615-3760 F: (212) 615-3600

Thornton Tomasetti

STRUCTURAL ENGINEERS:
Thornton Tomasetti
51 Madison Avenue
NEW YORK, NY 10010
T: (917) 661-7800 F: (917) 661-7801

EKLA PLLC

LANDSCAPE ARCHITECTS:
Elizabeth Kennedy Landscape Architect, PLLC
Brooklyn Navy Yard Building 275 Room 202
63 Flushing Avenue Unit 264
BROOKLYN, NY 11205
T: (718) 569-8837 F: (718) 709-5885

PROJECT:

Kowsky Plaza Vaults

Battery Park City- North Cove

PROPERTY INFORMATION:

NOTES:

Rev No.	Description	Date

DOB STAMPS AND SIGNATURE:

SEAL AND SIGNATURE:

DATE: 11/15/15

DRAWN BY: AS/SH

CHECKED BY: TH

SHEET TITLE:

Window Details

SHEET NUMBER:

A-501.00

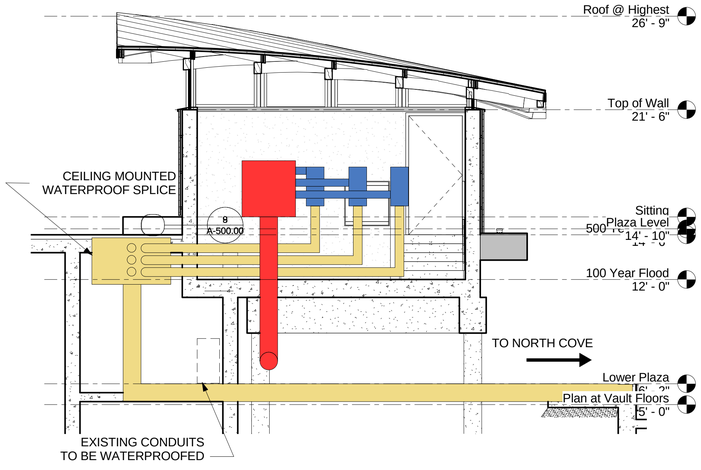

1 Road Map for the Site Underground Infrastructure_Section 1
1/4" = 1'-0"

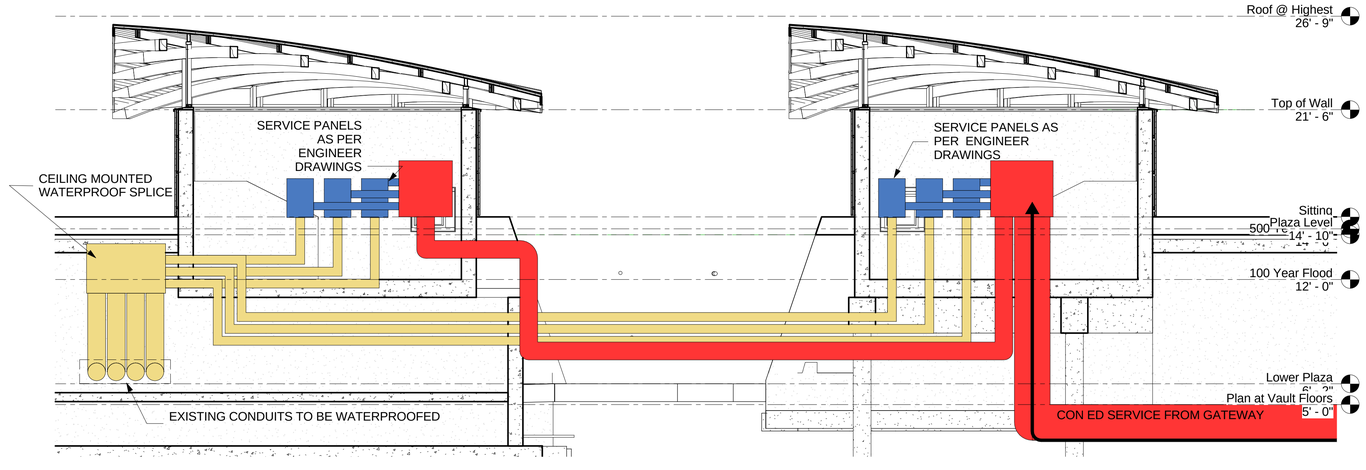

3 Road Map for the Site Underground Infrastructure_Section 2
1/4" = 1'-0"

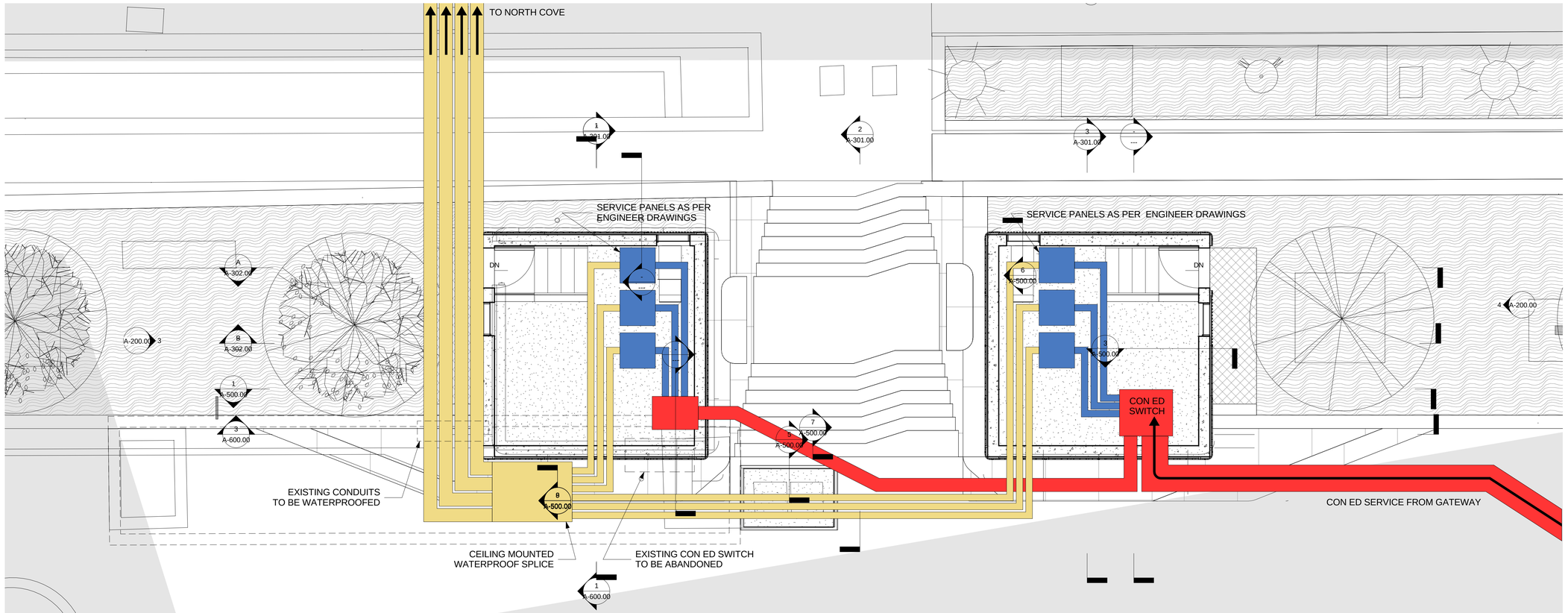

2 Road Map for the Site Underground Infrastructure_Plan
1/4" = 1'-0"

hMa
hanrahan Meyers architect,llp

ARCHITECT:
HANRAHAN MEYERS ARCHITECTS, LLP
6 MAIDEN LANE SUITE 510
NEW YORK, NY 10038
T: (212) 989-6026 F: (917) 591-9825

Cosentini

MEP ENGINEERS:
Cosentini Associates
Two Pennsylvania Plaza - Third Floor
NEW YORK, NY 10121
T: (212) 615-3760 F: (212) 615-3600

Thornton Tomasetti

STRUCTURAL ENGINEERS:
Thornton Tomasetti
51 Madison Avenue
NEW YORK, NY 10010
T: (917) 661-7800 F: (917) 661-7801

EK|A PLLC

LANDSCAPE ARCHITECTS:
Elizabeth Kennedy Landscape Architect, PLLC
Brooklyn Navy Yard Building 275 Room 202
63 Flushing Avenue Unit 264
BROOKLYN, NY 11205
T: (718) 569-8837 F: (718) 709-5885

PROJECT:

Kowsky Plaza
Vaults

Battery Park City- North
Cove

PROPERTY INFORMATION:

NOTES:

Rev No.	Description	Date
1	NOTES CORRECTION	08.05.15

DOB STAMPS AND SIGNATURE:

SEAL AND SIGNATURE:

DATE: 11/15/15

DRAWN BY: AS

CHECKED BY: TH

SHEET TITLE:

Infrastructure
Diagram

SHEET NUMBER:

A-600.00









hMa
hanrahan Meyers architect,llp

ARCHITECT:
HANRAHAN MEYERS ARCHITECTS, LLP
6 MAIDEN LANE SUITE 510
NEW YORK, NY 10038
T: (212) 989-6026 F: (917) 591-9825

Cosentini

MEP ENGINEERS:
Cosentini Associates
Two Pennsylvania Plaza - Third Floor
NEW YORK, NY 10121
T: (212) 615-3760 F: (212) 615-3600

Thornton Tomasetti

STRUCTURAL ENGINEERS:
Thornton Tomasetti
51 Madison Avenue
NEW YORK, NY 10010
T: (917) 661-7800 F: (917) 661-7801

EK|A PLLC

LANDSCAPE ARCHITECTS:
Elizabeth Kennedy Landscape Architect, PLLC
Brooklyn Navy Yard Building 275 Room 202
63 Flushing Avenue Unit 264
BROOKLYN, NY 11205
T: (718) 569-8837 F: (718) 709-5885

PROJECT:

Kowsky Plaza
Vaults

Battery Park City- North
Cove

PROPERTY INFORMATION:

NOTES:

Rev No.	Description	Date

DOB STAMPS AND SIGNATURE:

SEAL AND SIGNATURE:

DATE: 11/15/15

DRAWN BY: SH/AS

CHECKED BY: TH

SHEET TITLE:

Rendered
Views

SHEET NUMBER:

G-002.00







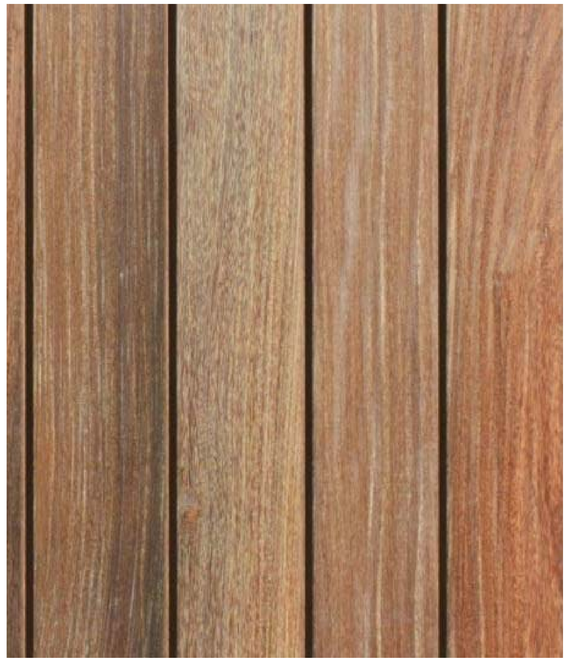











hMa
hanrahan Meyers architect,llp

ARCHITECT:
HANRAHAN MEYERS ARCHITECTS, LLP
6 MAIDEN LANE SUITE 510
NEW YORK, NY 10038
T: (212) 989-6026 F: (917) 591-9825

Cosentini

MEP ENGINEERS:
Cosentini Associates
Two Pennsylvania Plaza - Third Floor
NEW YORK, NY 10121
T: (212) 615-3760 F: (212) 615-3600

Thornton Tomasetti

STRUCTURAL ENGINEERS:
Thornton Tomasetti
51 Madison Avenue
NEW YORK, NY 10010
T: (917) 661-7800 F: (917) 661-7801

EKLA PLLC

LANDSCAPE ARCHITECTS:
Elizabeth Kennedy Landscape Architect, PLLC
Brooklyn Navy Yard Building 275 Room 202
63 Flushing Avenue Unit 264
BROOKLYN, NY 11205
T: (718) 569-8837 F: (718) 709-5885

PROJECT:

Kowsky Plaza Vaults

Battery Park City- North Cove

PROPERTY INFORMATION:

NOTES:

Rev No.	Description	Date

DOB STAMPS AND SIGNATURE:

SEAL AND SIGNATURE:

DATE: 11/15/15

DRAWN BY: SH/AS

CHECKED BY: TH

SHEET TITLE:

Material Samples

SHEET NUMBER:

G-003.00

GENERAL NOTES

1. COORDINATE NEW PLANTING AND RESTORATION WORK WITH TREE REMOVAL AND PROTECTION UNDER SPECIFICATION SECTION 015390.
2. REFER TO SPECIFICATION SECTION 329300 FOR PLANTING REQUIREMENTS.
3. REFER TO SPECIFICATION SECTION 329300 FOR TRANSPLANTING REQUIREMENTS.
4. TRANSPLANTED MATERIALS TO BE PLANTED UNDER WARRANTY. REPLACE ANY TRANSPLANTED MATERIALS

PLANT MATERIALS LIST

QUANTITY	ABBREV	BOTANICAL NAME	COMMON NAME	SIZE	SPEC	NOTES
14	HQSD	HYDRANGEA QUERCIFOLIA VAR. "SIKES DWARF"	"SIKES DWARF" OAKLEAF HYDRANGEA	2 GAL	CONT	NOTES
200	LM-(T)	(TRANSPLANTED) LIRIOPE MUSCARI	LIRIOPE ("LILYTURF"); TRANSPLANTED	1 GAL	CONT	SOURCE FROM TRANSPLANTING; 9" OC STAGGERED SPACING
QUANTITY	ABBREV	BOTANICAL NAME	COMMON NAME	SIZE	SPEC	NOTES
QUANTITY	ABBREV	BOTANICAL NAME	COMMON NAME	SIZE	SPEC	NOTES

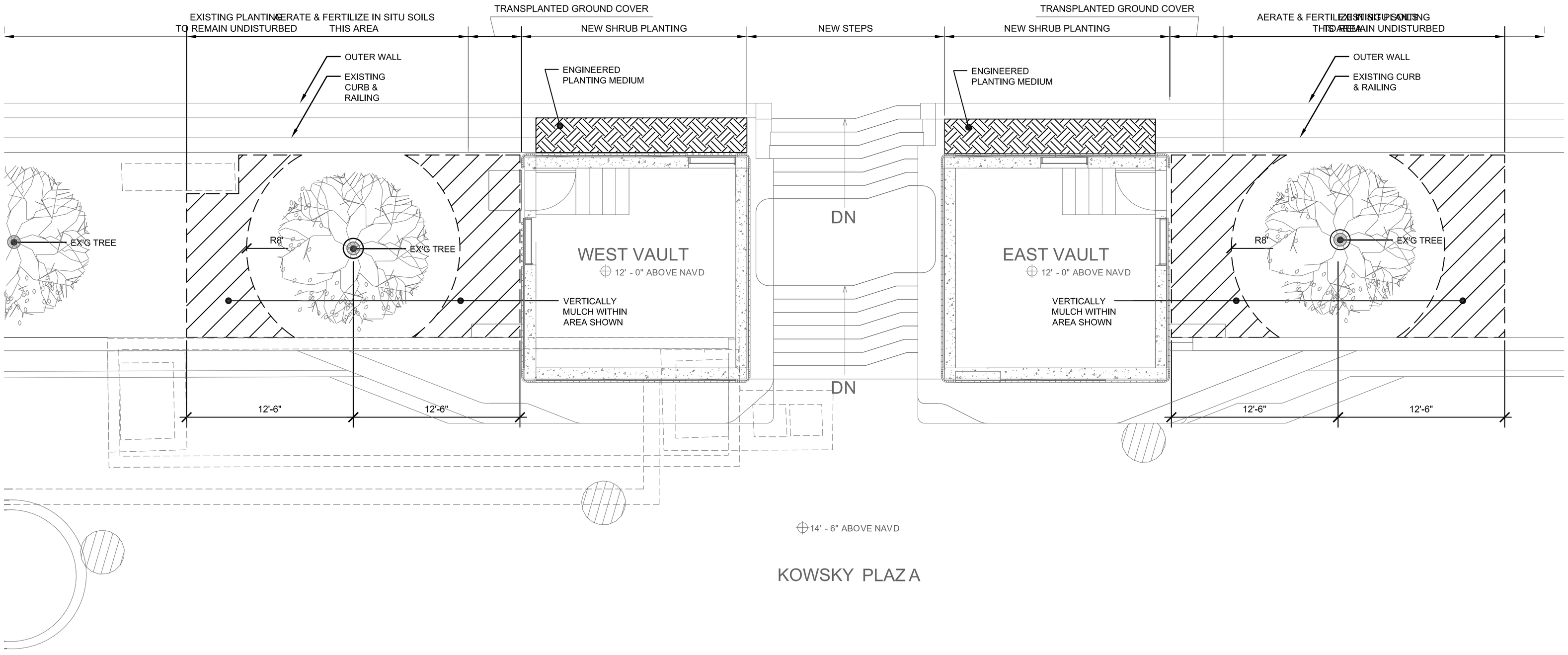

KOWSKY PLAZA

01 LANDSCAPE PREPARATION PLAN
SCALE: 1/4" = 1'-0"

hMa
hanrahan Meyers architect,llp

ARCHITECT:
HANRAHAN MEYERS ARCHITECTS, LLP
6 MAIDEN LANE SUITE 510
NEW YORK, NY 10038
T: (212) 989-6026 F: (917) 591-9825

Cosentini

MEP ENGINEERS:
Cosentini Associates
Two Pennsylvania Plaza - Third Floor
NEW YORK, NY 10121
T: (212) 615-3760 F: (212) 615-3600

Thornton Tomasetti

STRUCTURAL ENGINEERS:
Thornton Tomasetti
51 Madison Avenue
NEW YORK, NY 10010
T: (917) 661-7800 F: (917) 661-7801

EKLA PLLC

LANDSCAPE ARCHITECTS:
Elizabeth Kennedy Landscape Architect, PLLC
Brooklyn Navy Yard Building 275 Room 202
63 Flushing Avenue Unit 264
BROOKLYN, NY 11205
T: (718) 569-8837 F: (718) 709-5885

PROJECT:
Kowsky Plaza Repair
401 South End Avenue
New York, NY 10280

PROPERTY INFORMATION:

NOTES:

Rev No.	Description	Date

DOB STAMPS AND SIGNATURE:

SEAL AND SIGNATURE:

DATE: 11/15/15
DRAWN BY: AS & SH
CHECKED BY: TH
SHEET TITLE:
PAGE OF

SHEET NUMBER:

GENERAL NOTES

1. COORDINATE NEW PLANTING AND RESTORATION WORK WITH TREE REMOVAL AND PROTECTION UNDER SPECIFICATION SECTION 015390.
2. REFER TO SPECIFICATION SECTION 329300 FOR PLANTING REQUIREMENTS.
3. REFER TO SPECIFICATION SECTION 329300 FOR TRANSPLANTING REQUIREMENTS.
4. TRANSPLANTED MATERIALS TO BE PLANTED UNDER WARRANTY. REPLACE ANY TRANSPLANTED MATERIALS

PLANT MATERIALS LIST

QUANTITY	ABBREV	BOTANICAL NAME	COMMON NAME	SIZE	SPEC	NOTES
14	HQSD	HYDRANGEA QUERCIFOLIA VAR. "SIKES DWARF"	"SIKES DWARF" OAKLEAF HYDRANGEA	2 GAL	CONT	NOTES
200	LM-(T)	(TRANSPLANTED) LIRIOPE MUSCARI	LIRIOPE ("LILYTURF"); TRANSPLANTED	1 GAL	CONT	SOURCE FROM TRANSPLANTING; 9" OC STAGGERED SPACING
QUANTITY	ABBREV	BOTANICAL NAME	COMMON NAME	SIZE	SPEC	NOTES
QUANTITY	ABBREV	BOTANICAL NAME	COMMON NAME	SIZE	SPEC	NOTES

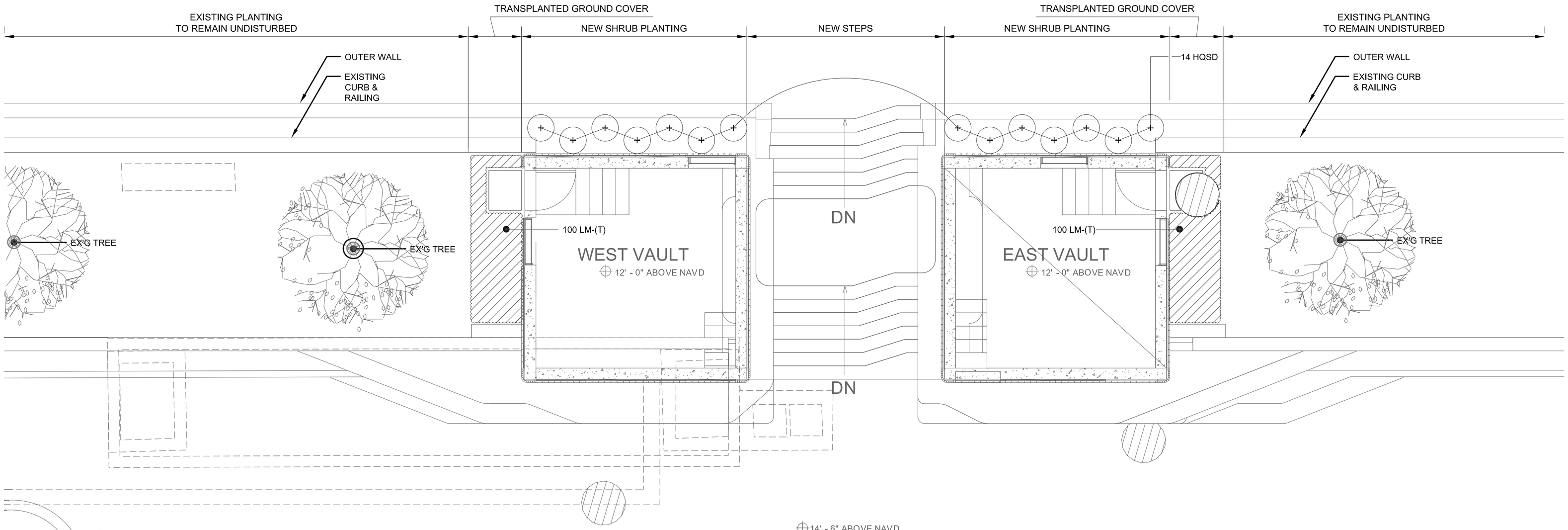

KOWSKY PLAZA

01 PLANTING PLAN
SCALE: 1/4" = 1'-0"

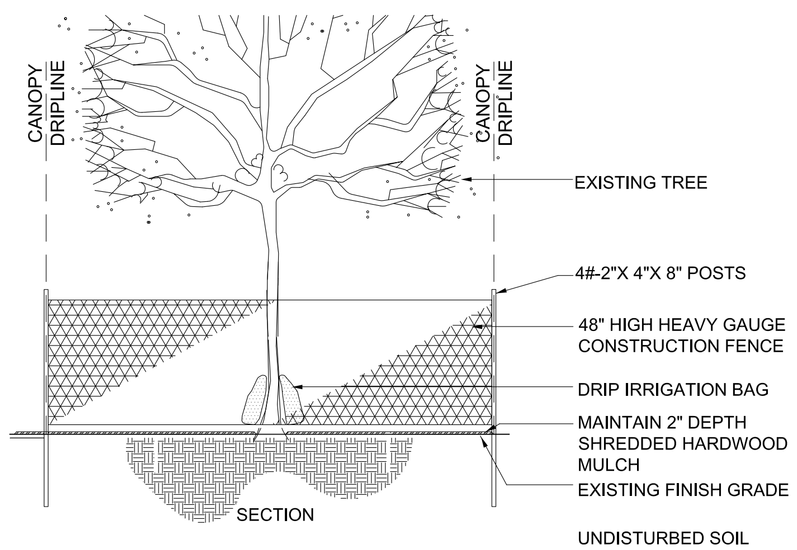

02 TREE ROOT ZONE PROTECTION DETAIL
NOT TO SCALE

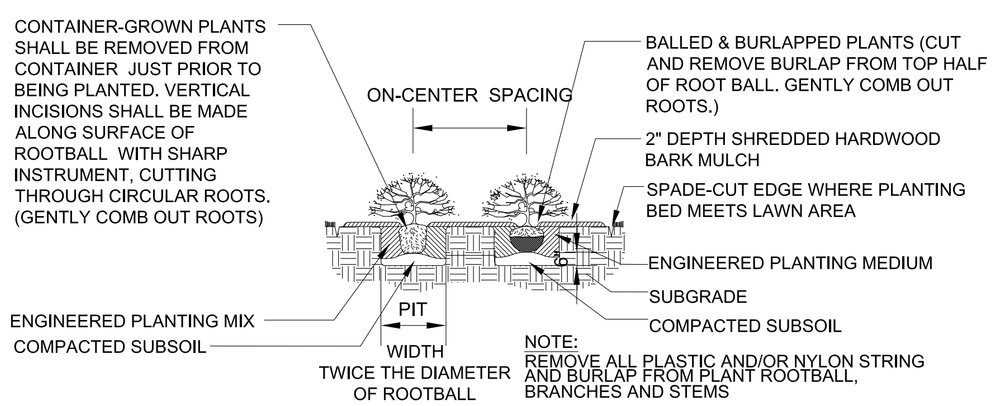

03 TYPICAL CONTAINER STOCK PLANTING DETAIL
NOT TO SCALE

hMa
hanrahan Meyers architect,llp

ARCHITECT:
HANRAHAN MEYERS ARCHITECTS, LLP
6 MAIDEN LANE SUITE 510
NEW YORK, NY 10038
T: (212) 989-6026 F: (917) 591-9825

Cosentini

MEP ENGINEERS:
Cosentini Associates
Two Pennsylvania Plaza - Third Floor
NEW YORK, NY 10121
T: (212) 615-3760 F: (212) 615-3600

Thornton Tomasetti

STRUCTURAL ENGINEERS:
Thornton Tomasetti
51 Madison Avenue
NEW YORK, NY 10010
T: (917) 661-7800 F: (917) 661-7801

EK|A PLLC

LANDSCAPE ARCHITECTS:
Elizabeth Kennedy Landscape Architect, PLLC
Brooklyn Navy Yard Building 275 Room 202
63 Flushing Avenue Unit 264
BROOKLYN, NY 11205
T: (718) 569-8837 F: (718) 709-5885

PROJECT:
Kowsky Plaza Repair
401 South End Avenue
New York, NY 10280

PROPERTY INFORMATION:

NOTES:

Rev No.	Description	Date

DOB STAMPS AND SIGNATURE:

SEAL AND SIGNATURE:

DATE: 11/15/15
DRAWN BY: AS & SH
CHECKED BY: TH
SHEET TITLE:
PAGE OF

SHEET NUMBER:

GR GENERAL REQUIREMENTS

GR-1 AS USED IN THESE GENERAL NOTES:
"DRAWINGS" MEANS THE LATEST STRUCTURAL DESIGN DRAWINGS, UON.
"SPECIFICATIONS" MEANS THE LATEST PROJECT SPECIFICATIONS, UON.
“CONTRACT DOCUMENTS” IS DEFINED AS THE DESIGN DRAWINGS AND THE SPECFICATIONS
“SER” IS DEFINED AS THE STRUCTURAL ENGINEER OF RECORD FOR THE STRUCTURE IN ITS FINAL CONDITION.
“DESIGN PROFESSIONALS” IS DEFINED AS THE OWNER’S ARCHITECT AND SER.
“MEP” INCLUDES, BUT IS NOT LIMITED TO MECHANICAL, ELECTRICAL, PLUMBING, FIRE PROTECTION.
“CONTRACTOR” IS DEFINED TO INCLUDE ANY OF THE FOLLOWING: GENERAL CONTRACTOR AND THEIR SUBCONTRACTORS, CONSTRUCTION MANAGER AND THEIR SUBCONTRACTORS, STRUCTURAL STEEL FABRICATOR OR STRUCTURAL STEEL ERECTOR.
“BASE BUILDING STRUCTURE” IS DEFINED AS THE STRUCTURAL FRAME DESIGNED BY THORNTON TOMASETTI.
“STRUCTURE IN ITS FINAL CONDITION” MEANS ALL STRUCTURAL ELEMENTS SHOWN ON THE STRUCTURAL CONTRACT DOCUMENTS ARE INSTALLED AND COMPLETELY CONNECTED AND INSPECTED WITH NO OUTSTANDING NON-COMPLIANCE ISSUES.

GR-2 THE CONTRACTOR IS RESPONSIBLE FOR COORDINATION OF THE STRUCTURAL WORK WITH THE ARCHITECTURAL, CIVIL, MEP CONTRACT DOCUMENTS, AS WELL AS ANY OTHER APPLICABLE TRADES.

GR-3 THE CONTRACTOR IS RESPONSIBLE FOR THE STABILITY OF THE STRUCTURE UNTIL THE CONSTRUCTION OF THE STRUCTURE REACHES ITS FINAL CONDITION.

GR-4 THE CONTRACTOR IS SOLELY RESPONSIBLE FOR THE DESIGN, INSTALLATION, AND REMOVAL OF TEMPORARY BRACING AND CONSTRUCTION SUPPORTS, FOR NEW AND EXISTING STRUCTURES, AS NECESSARY TO COMPLETE THE PROJECT. NO PORTION OF THE PROJECT WHILE UNDER CONSTRUCTION IS INTENDED TO BE STABLE IN THE ABSENCE OF THE CONTRACTOR’S TEMPORARY SUPPORTS AND BRACES. CONTRACTOR SHALL RETAIN A STRUCTURAL ENGINEER LICENSED IN THE STATE IN WHICH THE PROJECT IS LOCATED TO DESIGN TEMPORARY BRACING AND CONSTRUCTION SUPPORTS.

GR-5 LATERAL LOAD RESISTANCE AND STABILITY OF THE STRUCTURE IN ITS FINAL CONDITION IS PROVIDED BY SHEARWALLS AND LATERAL STABILITY OF OTHER ELEMENTS IS PROVIDED THROUGH ROOF DECK AND IN FLOOR BRACING.

GR-6 THE SPECIFICATIONS ARE AN INTEGRAL PART OF THE CONTRACT DOCUMENTS AND SHALL BE USED IN CONJUNCTION WITH THE STRUCTURAL DRAWINGS.

GR-7 THE CONTRACTOR SHALL VERIFY ALL EXISTING DIMENSIONS AND CONDITIONS AND COORDINATE WITH THE STRUCTURAL DRAWINGS, ARCHITECTURAL DRAWINGS, DRAWINGS FROM OTHER CONSULTANTS, PROJECT SHOP DRAWINGS AND FIELD CONDITIONS.

GR-8 IN CASES OF CONFLICT BETWEEN DRAWINGS AND/OR SPECIFICATIONS AND OTHER DISCIPLINES OR EXISTING CONDITIONS, CONTRACTOR SHALL NOTIFY THE DESIGN PROFESSIONALS AND OBTAIN CLARIFICATION PRIOR TO BIDDING AND PROCEEDING WITH WORK.

GR-9 APPLY DETAILS, SECTIONS, AND NOTES ON THE DRAWINGS WHERE CONDITIONS ARE SIMILAR TO THOSE INDICATED BY DETAIL, DETAIL TITLE OR NOTE.

GR-10 ONLY USE DIMENSIONS INDICATED ON THE DRAWINGS. DO NOT SCALE DRAWINGS.

GR-11 ASSUME EQUAL SPACING BETWEEN ESTABLISHED DIMENSIONS, IF NOT INDICATED ON DRAWINGS.

GR-12 CENTERLINES OF COLUMNS AND FOUNDATIONS COINCIDE WITH GRID LINE INTERSECTIONS, UON.

GR-13 CENTERLINES OF GRADE BEAMS AND WALLS COINCIDE WITH CENTERLINES OF FOUNDATIONS, UON.

GR-14 CENTERLINES OF FRAMING MEMBERS COINCIDE WITH COLUMN CENTERLINES, UON.

GR-15 THE CONTRACTOR SHALL PROTECT EXISTING FACILITIES, STRUCTURES AND UTILITIES FROM DAMAGE.

GR-16 THE CONTRACTOR SHALL VERIFY THAT CONSTRUCTION LOADS DO NOT EXCEED THE CAPACITY OF THE STRUCTURE AT THE TIME THE LOAD IS APPLIED.

GR-17 THE CONTRACTOR SHALL COORDINATE THE BOTTOM OF BASE PLATE ELEVATIONS WITH THE AS-BUILT TOP OF SUPPORT ELEVATIONS.

GR-18 THE CONTRACTOR SHALL VERIFY ALL OPENING SIZES AND LOCATIONS WITH OTHER DISCIPLINES. THE DRAWINGS DO NOT SHOW ALL OPENINGS REQUIRED. ADDITIONAL OPENINGS, BLOCKOUTS AND SLEEVES MAY BE REQUIRED BY OTHER DISCIPLINES AND SHALL BE CONSTRUCTED USING THE TYPICAL DETAILS AND/OR THE CRITERIA INDICATED ON THE DRAWINGS. OPENINGS REQUIRED BUT NOT SHOWN ON THE STRUCTURAL DRAWINGS MUST BE APPROVED BY THE STRUCTURAL ENGINEER.

GR-19 ELEVATIONS INDICATED ON STRUCTURAL DRAWINGS ARE BASED ON A PROJECT DATUM INDICATED ON THE ARCHITECTURAL DRAWINGS.

[GR-20] SEE ARCHITECTURAL, CIVIL, AND MEP CONTRACT DOCUMENTS FOR ADDITIONAL INFORMATION RELATING TO THE COORDINATION OF STRUCTURAL COMPONENTS INCLUDING, BUT NOT LIMITED TO:

CIVIL:
SITING OF BUILDING GRID LINES WITH RESPECT TO CITY BENCHMARKS
SITE PREPARATION
BACKFILLING MATERIALS AND REQUIREMENTS
PAVING AND SITE ELEMENTS OUTSIDE OF BUILDING ENVELOPE
NEW AND EXISTING SITE UTILITIES

ARCHITECTURAL:
PLAN DIMENSIONS AND PROJECT DATUM
SLAB EDGE DIMENSIONS
FINISH ELEVATIONS
WATERPROOFING AND DAMP-PROOFING DETAILS
RAMP GEOMETRY, PITS, SLAB SLOPES AND DEPRESSIONS
EMBEDMENTS, INSERTS, BLOCKOUTS, ETC.
EXACT OPENING SIZES FOR PIPES, DUCTS, ETC.
CONCRETE FINISHES AND TOPPING SLABS
CONCRETE CURBS AND HOUSEKEEPING PADS
INTERIOR NON-STRUCTURAL MASONRY PARTITIONS
FIRE RATINGS

MEP:
PIPE AND DUCT SIZES FOR OPENING AND SLEEVE COORDINATION
FLOOR DRAINS
UNDERFLOOR AND PERIMETER DRAINAGE SYSTEMS
EQUIPMENT CURBS
CONDUITS AND EMBEDMENTS IN WALLS AND SLABS

CD CODES AND DESIGN CRITERIA

CD-1 PERFORM ALL CONSTRUCTION IN CONFORMANCE WITH THE BUILDING AND DESIGN CODES REFERENCED WITHIN THESE DOCUMENTS. THE PROJECT DOCUMENTS REFER TO THE FOLLOWING CODES AND STANDARDS, UON:

NEW YORK CITY BUILDING CODE, 2014 EDITION

STRUCTURAL CONCRETE:
"BUILDING CODE REQUIREMENTS FOR STRUCTURAL CONCRETE"
THE AMERICAN CONCRETE INSTITUTE (ACI 318-11)

CONCRETE MASONRY:
"BUILDING CODE REQUIREMENTS FOR CONCRETE MASONRY STRUCTURES"
THE AMERICAN CONCRETE INSTITUTE (ACI 530-11)

STRUCTURAL STEEL:
"SPECIFICATION FOR STRUCTURAL STEEL BUILDINGS”, MARCH 2011 14TH EDITION CONFORMING TO THE PROVISIONS OF LOAD RESISTANCE FACTOR DESIGN,
BY THE AMERICAN INSTITUTE OF STEEL CONSTRUCTION (AISC-LRFD)

WOOD:
"NATIONAL DESIGN SPECIFICATION FOR WOOD CONSTRUCTION"
AMERICAN NATIONAL STANDARDS INSTITUTE / AMERICAN FOREST & PAPER ASSOCIATION (ANSI/AF&PA NDS-[YEAR])

CD-2 LIVE LOADS:

MECHANICAL ROOMS	150 LBS/SQ. FT. OR ACTUAL WEIGHT
SIDEWALKS	600 LBS./SQ. FT.
ROOFS	20 LBS./SQ. FT. [UNREDUCED]

CD-3 SUPERIMPOSED DEAD LOADS:

HUNG MEP ABOVE MECH ROOM	10 LBS/SQ. FT.

CD-4 SNOW LOADS:

FLAT ROOF SNOW LOAD (Pf)	22 PSF
GROUND SNOW LOAD (Pg)	30 PSF
SNOW EXPOSURE FACTOR (Ce):	0.9
SNOW LOAD IMPORTANCE FACTOR (Is):	1.0
THERMAL FACTOR (Ct):	1.2
SNOW DRIFTING PER CODE	

CD-5 WIND LOAD DESIGN DATA:

MAIN WIND FORCE RESISTING SYSTEM	
BASIC WIND SPEED, V	98 MPH
EXPOSURE	D
WIND IMPORTANCE FACTOR (Iw)	0.87
OCCUPANCY/RISK CATEGORY	I
INTERNAL PRESSURE COEFFICIENT	± 0.18

COMPONENT AND CLADDING DESIGN PRESSURES A=3'0"
EFFECTIVE WIND AREA= 22 PSF WALL= 22 PSF WALL END ZONE= 30 PSF

ROOF EFFECTIVE WIND AREA = 575 SF
ROOF= 24 PSF ROOF EDGE= 40PSF ROOF CORNER= 60 PSF
OVERHANG EDGE= 70PSF OVERHANG CORNER= 100 PSF

CD-6 SEISMIC LOAD DESIGN DATA:

SEISMIC IMPORTANCE FACTOR (Is)	1.0
Ss	0.281 g
S1	0.073 g
SDS	0.450 g
SD1	0.170 g
SITE CLASS	E
SEISMIC DESIGN CATEGORY	C
LATERAL SYSTEM DESCRIPTION	ORDINARY RC SHEAR WALL
SEISMIC RESPONSE COEFFICIENT (Cs)	0.11
RESPONSE MODIFICATION FACTOR (R)	4
ANALYSIS PROCEDURE DESCRIPTION	EQUIVALENT LATERAL FORCE
DESIGN BASE SHEAR	15 KIPS

hMa
hanrahan Meyers architect,llp

ARCHITECT:
HANRAHAN MEYERS ARCHITECTS, LLP
6 MAIDEN LANE SUITE 510
NEW YORK, NY 10038
T: (212) 989-6026 F: (917) 591-9825

Cosentini

MEP ENGINEERS:
Cosentini Associates
Two Pennsylvania Plaza - Third Floor
NEW YORK, NY 10121
T: (212) 615-3760 F: (212) 615-3600

Thornton Tomasetti

STRUCTURAL ENGINEERS:
Thornton Tomasetti
51 Madison Avenue
NEW YORK, NY 10010
T: (917) 661-7800 F: (917) 661-7801

EK|A PLLC

LANDSCAPE ARCHITECTS:
Elizabeth Kennedy Landscape Architect, PLLC
Brooklyn Navy Yard Building 275 Room 202
63 Flushing Avenue Unit 264
BROOKLYN, NY 11205
T: (718) 569-8837 F: (718) 709-5885

PROJECT:

Kowsky Plaza Repair

401 South End Avenue
New York, NY 10280

PROPERTY INFORMATION:

NOTES:

Rev No.	Description	Date
1	COORDINATION SET	08.21.2015
2	BID SET	08.31.2015

DOB STAMPS AND SIGNATURE:

SEAL AND SIGNATURE:

DATE: 11/15/2015
DRAWN BY: Author
CHECKED BY: Checker

SHEET TITLE:
GENERAL NOTES

SHEET NUMBER:

S-001.00

CD-7 FLOOD LOADS: SEE ASCE 24

CD-8 IN CASES WHERE THE CONTRACTOR DETERMINES THAT SUSPENDED OR FLOOR MOUNTED MEP EQUIPMENT LOADS EXIST WHICH EXCEED DESIGN LOADS INDICATED ON CONTRACT DOCUMENTS, CONTRACTOR SHALL SUBMIT LOAD DATA TO DESIGN PROFESSIONALS FOR REVIEW PRIOR TO PROCEEDING WITH WORK.

CD-9 DISTRIBUTE THE MAXIMUM LOAD HUNG FROM ANY STRUCTURAL MEMBER FOR MEP DUCTWORK, PIPING ETC OVER THE MEMBER'S TRIBUTARY AREA IN A WAY THAT THE DESIGN SUPERIMPOSED DEAD LOADS LISTED IN CONTRACT DOCUMENTS ARE NOT EXCEEDED. THE CONTRACTOR SHALL COORDINATE THE LOADS OF ALL TRADES AND PROVIDE ADDITIONAL SUPPORT OR DISTRIBUTION FRAMING AS REQUIRED TO ACHIEVE THE ALLOWABLE LOAD DISTRIBUTION.

CD-10 STRUCTURAL COMPONENTS ARE NOT DESIGNED FOR VIBRATING EQUIPMENT. MOUNT VIBRATING EQUIPMENT ON VIBRATION ISOLATORS.

CD-11 SERVICEABILITY

LIVE LOAD DEFLECTION IS LESS THAN [L/360]

LONG-TERM TOTAL DEFLECTION IS LESS THAN [L/240]

LATERAL DRIFT DUE TO [WIND] LOADS IS LESS THAN OR EQUAL TO [H/400]

CD-12 CONNECTIONS OF SYSTEMS DESIGNED BY CONTRACTOR'S ENGINEER SUCH AS, BUT NOT LIMITED TO, CLADDING, STAIRS, ELEVATORS, ESCALATORS, PRECAST STADIA, AND MEP LOADS ARE ASSUMED TO IMPOSE VERTICAL AND/OR HORIZONTAL LOADS ON THE BASE BUILDING STRUCTURAL MEMBERS WITHOUT GENERATING TORSION IN THE SUPPORTING STRUCTURAL MEMBERS. CONTRACTOR IS RESPONSIBLE FOR FURNISHING AND INSTALLING ALL SUPPLEMENTARY BRACING MEMBERS AS REQUIRED TO PREVENT TORSION ON THE BASE BUILDING STRUCTURE.

CD-13 FOR FIRE RATING AND FIREPROOFING ASSEMBLY EVALUATIONS, CONSIDER THE FOLLOWING ASSEMBLIES RESTRAINED: COMPOSITE WIDE-FLANGE STEEL FRAMING, INTERIOR BAYS OF CONTINUOUS CAST-IN-PLACE CONCRETE CONSTRUCTION. CONSIDER ALL OTHER ASSEMBLIES UNRESTRAINED.

DE DEMOLITION

DE-1 THE CONTRACTOR IS FULLY RESPONSIBLE FOR THE MEANS AND METHODS OF DEMOLITION AND THE INTEGRITY AND STABILITY OF THE EXISTING STRUCTURE DURING DEMOLITION UNTIL THE WORK IS COMPLETED. THE CONTRACTOR SHALL PROVIDE SHORING IN REQUIRED LOCATIONS WHERE EXISTING CONSTRUCTION TO REMAIN WILL BE AFFECTED BY DEMOLITION.

DE-2 THE CONTRACTOR IS REPONSIBLE FOR REPAIRS TO ANY STRUCTURAL ELEMENTS WHICH ARE TO REMAIN AND THAT HAVE BEEN DAMAGED DURING THE DEMOLITION PROCESS TO THE COMPLETE SATISFACTION OF THE OWNER. THE REPAIRS SHALL BE AT NO EXPENSE TO THE OWNER. ALL REPAIR WORK SHALL BE DESIGNED BY A LICENSED STRUCTURAL ENGINEER IN THE STATE OF [STATE] AND SUBMITTED TO THE STRUCTURAL ENGINEER OF RECORD FOR REVIEW AND APPROVAL PRIOR TO COMMENCING REPAIR WORK.

DE-3 ALL EXISTING FRAMING IS INDICATED FOR REFERENCE ONLY AND IS TO BE FIELD VERIFIED BY THE CONTRACTOR. VERIFY THE EXACT EXTENT OF DEMOLITION AT THE SITE. DETERMINE THE NATURE AND EXTENT OF DEMOLITION THAT WILL BE NECESSARY BY COMPARING THE CONTRACT DOCUMENTS WITH THE EXISTING CONSTRUCTION.

DE-4 THE CONTRACTOR SHALL USE THE STRUCTURAL CONTRACT DOCUMENTS IN CONJUNCTION WITH THE ARCHITECTURAL AND MEP DEMOLITION CONTRACT DOCUMENTS. IN THE EVENT OF CONFLICTS, THE CONTRACTOR SHALL IMMEDIATELY NOTIFY THE ARCHITECT AND STRUCTURAL ENGINEER.

DE-5 THE CONTRACTOR SHALL USE QUALIFIED, EXPERIENCED PERSONNEL FOR DEMOLITION AND REMOVAL OPERATIONS. PERFORM DEMOLITION AND REMOVAL OPERATIONS IN A CAREFUL AND ORDERLY MANNER TO PREVENT HAZARDS TO PERSONS, DAMAGE TO PROPERTY, AND THE SPREADING OF DUST AND DEBRIS.

DE-6 DO NOT PERMIT PORTIONS OF THE STRUCTURE TO FALL NOR DEBRIS TO DROP EXCEPT BY METHODS WHICH WILL INSURE INTEGRITY OF THE STRUCTURE.

DE-7 PRIOR TO THE START OF WORK, VERIFY THAT THE SCOPE OF DEMOLITION INDICATED ON THE CONTRACT DOCUMENTS SHALL NOT DAMAGE, CUT OR DISRUPT SERVICE OF ANY MECHANICAL SYSTEM, ELECTRICAL SYSTEM OR UTILITY EMBEDDED IN THE EXISTING STRUCTURE.

DE-8 DO NOT REMOVE MORE OF THE EXISTING STRUCTURE THAN INDICATED ON CONTRACT DOCUMENTS. DO NOT DAMAGE, MAR, CUT OR DEFACE THE REMAINING STRUCTURE OR MATERIALS TO BE REUSED.

DE-9 THE CONTRACTOR SHALL INCLUDE IN HIS BID THE COST OF REMOVING DEMOLISHED MATERIALS FROM THE SITE IN ACCORDANCE WITH ALL APPLICABLE LAWS, CODES, AND REGULATIONS.

DE-10 WHERE NEW OPENINGS IN EXISTING CONCRETE SLABS OR WALLS ARE TO BE CREATED, THE DEMOLITION CONTRACTOR SHALL CORE HOLES AT THE OUTSIDE CORNERS OF THE NEW OPENING PRIOR TO DEMOLITION. SAW-CUT AND DEMOLISH SLAB OR WALL ONLY AFTER THE INSTALLATION OF ALL REQUIRED NEW STRUCTURAL FRAMING AND/OR REINFORCEMENT IN PLAN OR SECTION, UON. SAW CUTTING SHALL BE STRAIGHT AND SHALL NOT EXTEND INTO EXISTING SLAB OR WALL TO REMAIN NOR BEYOND THE HOLES CORED AT THE CORNERS OF THE NEW OPENING.

PI PERFORMANCE ITEMS

PI-1 THE CONTRACTOR SHALL EMPLOY OR RETAIN A LICENSED STRUCTURAL ENGINEER IN THE STATE IN WHICH THIS PROJECT IS LOCATED TO DESIGN AND DETAIL PERFORMANCE ITEMS AS PART OF THE BASE BUILDING STRUCTURE INDICATED IN THE CONTRACT DOCUMENTS INCLUDING BUT NOT LIMITED TO:

AUGERCAST PILES

SU SUBMITTALS

SU-1 TWENTY WORKING DAYS PRIOR TO SUBMITTING SHOP DRAWINGS, THE CONTRACTOR SHALL SUBMIT FOR STRUCTURAL ENGINEER' S REVIEW A SCHEDULE WHICH DETAILS THE ESTIMATED QUANTITY OF SHOP DRAWINGS AND THE DATE THE SHOP DRAWINGS WILL BE RECEIVED BY THE STRUCTURAL ENGINEER. THE STRUCTURAL ENGINEER SHALL HAVE THE OPPORTUNITY TO REVIEW THE PROPOSED SCHEDULE AND SUBMIT COMMENTS TO THE CONTRACTOR. THE FINAL SHOP DRAWING SCHEDULE SHALL BE DEVELOPED AND SUBMITTED TO THE STRUCTURAL ENGINEER. IN ACCORDANCE WITH THE SHOP DRAWING SCHEDULE, THE STRUCTURAL ENGINEER WILL RETURN THE SHOP DRAWING ITEMS WITHIN TEN WORKING DAYS AFTER HAVING RECEIVED THE REPRODUCIBLE SHOP DRAWING.

SU-2 THE CONTRACTOR IS TO REVIEW EACH SUBMITTAL PRIOR TO FORWARDING TO ARCHITECT AND STRUCTURAL ENGINEER. THE CONTRACTOR IS TO STAMP EACH SUBMITTAL VERIFYING THAT THE FOLLOWING IS ADDRESSED:

1. THE SHOP DRAWING IS REQUESTED.
2. THE SHOP DRAWING IS BASED ON THE LATEST DESIGN.
3. THE ARCHITECT' S AND STRUCTURAL ENGINEER' S COMMENTS FROM ANY PREVIOUS SUBMITTALS ARE ADDRESSED.
4. THE WORK IS COORDINATED AMONG ALL CONSTRUCTION TRADES.
5. REVISIONS FROM PREVIOUS SUBMITTALS ARE CLEARLY MARKED BY CIRCLING OR CLOUDS.
6. SUBMITTAL IS COMPLETE.
7. SUBMITTAL DOES NOT INCLUDE SUBSTITUTION REQUEST
8. SUBMITTAL SHALL INCLUDE A STAMP INDICATING PROJECT NAME AND LOCATION, SUBMITTAL NUMBER, SPECIFICATION SECTION NUMBER.

THE STRUCTURAL ENGINEER SHALL RETURN, WITHOUT COMMENT, SUBMITTALS WHICH THE CONTRACTOR HAS NOT STAMPED OR WHICH DO NOT MEET THE ABOVE REQUIREMENTS. THE STRUCTURAL ENGINEER' S REVIEW OF SUBMITTALS SHALL BE FOR GENERAL CONFORMANCE WITH THE DESIGN INTENT. NO WORK SHALL BE STARTED WITHOUT SUCH REVIEW.

SU-3 FOR COMPONENTS THAT REQUIRE ENGINEERING BY THE CONTRACTOR, PROVIDE A NOTE ON EACH SHOP DRAWING, WRITTEN AND SIGNED BY THE SUPPLIER' S ENGINEER, INDICATING THAT THE SHOP DRAWING IS IN CONFORMANCE WITH THE CALCULATIONS OF THE CONTRACTOR' S ENGINEER.

SU-4 THE FOLLOWING ITEMS REQUIRE SUBMITTALS FOR STRUCTURAL REVIEW AS OUTLINED IN THE SPECIFICATIONS:

031000	S	CALC	CONCRETE FORMWORK
032000	S		CONCRETE REINFORCING LAYOUT
033000		CALC	CONCRETE MIX DESIGNS
033000	S		CONCRETE CONSTRUCTION JOINT LAYOUT
033800	S		POST-TENSIONING TENDON LAYOUT
033800		CALC	POST-TENSIONING FRICTION LOSSES
034120	S	CALC	STRUCTURAL PRECAST CONCRETE
034120	S	CALC	STRUCTURAL PRECAST CONCRETE CONNECTIONS
041000	S		MASONRY REINFORCEMENT LAYOUT
051000	S		STRUCTURAL STEEL
051000	S	CALC	STRUCTURAL STEEL CONNECTIONS
051000	S		SHEAR STUD LAYOUT
052000	S	CALC	STEEL JOISTS, BRIDGING AND CONNECTIONS
053000	S	CALC	STEEL COMPOSITE DECK
053000	S	CALC	STEEL FORM DECK
053000	S	CALC	STEEL ROOF DECK
315600	S		SLURRY WALLS
316200	S		PILE LAYOUT, SIZE AND LENGTH
316329	S		CAISSON LAYOUT AND SIZE

S = SHOP DRAWINGS REQUIRED

CALC = SUPPORTING CALCULATIONS REQUIRED, SIGNED AND SEALED BY A LICENSED PROFESSIONAL, STRUCTURAL ENGINEER IN THE STATE IN WHICH THE PROJECT IS LOCATED.

SU-5 THE ITEMS IN THIS SECTION REFER TO LOADS IMPOSED BY CONTRACTOR DESIGNED SYSTEMS, SPECIFICALLY:

COLD-FORMED METAL FRAMING
EXTERIOR CLADDING SYSTEMS
ARCHITECTURAL ORNAMENTATION (FLAGPOLES, BANNERS, MASTS, ETC.)

WHERE CONTRACTOR LOADS IMPOSED DO NOT EXCEED AND/OR CONNECTION CONDITIONS DO NOT DIFFER FROM WHAT IS INDICATED IN THE STRUCTURAL DRAWINGS, SUBMIT FOR RECORD A LETTER SIGNED AND SEALED BY A LICENSED PROFESSIONAL, STRUCTURAL ENGINEER IN THE STATE IN WHICH THE PROJECT IS LOCATED STATING THE FOLLOWING:

"THE CONTRACTOR DESIGNED SYSTEM HAS BEEN DESIGNED TO IMPOSE LOADS ON THE BASE BUILDING STRUCTURE THAT ARE WITHIN THE LOAD LIMITS AND AT THE LOCATIONS INDICATED ON THE STRUCTURAL DRAWINGS."

WHERE CONTRACTOR LOADS IMPOSED FOR THE FOLLOWING ITEMS EXCEED AND/OR CONNECTION CONDITIONS DIFFER FROM WHAT IS SHOWN IN THE STRUCTURAL DRAWINGS, SUBMIT FOR APPROVAL TO SER LOADS IMPOSED ON THE PRIMARY STRUCTURAL FRAME DUE TO THE DEAD, LIVE, AND WIND/SEISMIC LOADS INDICATED ON THE CONTRACT DOCUMENTS.

SUBMITTAL SHALL LIST THE DESIGN LOADS USED AND BE SIGNED AND SEALED BY A LICENSED PROFESSIONAL, STRUCTURAL ENGINEER IN THE STATE IN WHICH THE PROJECT IS LOCATED. SUBMITTAL SHALL INCLUDE LOCATION, MAGNITUDE AND DIRECTION OF UNFACTORED IMPOSED LOADS, GRAPHICALLY REPRESENTED IN THEIR APPROPRIATE LOCATIONS ON A COPY OF THE CONTRACT DOCUMENT STRUCTURAL FRAMING PLANS OR ELEVATIONS AS APPROPRIATE. DETAIL REFERENCES IN THE CONNECTIONS APPLICABLE AT EACH LOCATION SHALL BE NOTED ON THE SUBMITTAL DRAWINGS.

FOR EXERIOR WALL ASSEMBLIES, THE LOADS IMPOSED SUBMITTAL SHALL BE COMPREHENSIVE INDICATING THE LOAD IMPOSED ON THE BASE BUILDING STRUCTURE AND SHALL BE THE REACTION BASED ON THE ACTUAL LOADS OF THE ENTIRE ASSEMBLY, INCLUDING BUT NOT LIMITED TO GLAZING, CLADDING, METAL STUD BACKUP, AND MULLIONS.

A SUBSTITUTION REQUEST MAY BE REQUIRED WHERE CONTRACTOR LOADS IMPOSED EXCEED AND/OR CONNECTION CONDITIONS DIFFER FROM THE BASIS OF DESIGN.

FN FOUNDATIONS

FN-1 THE FOUNDATION DESIGN IS BASED ON THE GEOTECHNICAL REPORT BY GEO TECH CONSULTANTS, LLC, DATED MARCH 5TH, 2015

FN-2 FOUNDATIONS HAVE BEEN DESIGNED BASED ON THE FOLLOWING DESIGN VALUES FROM THE GEOTECHNICAL REPORT:
GEOTECHNICAL PARAMETERS INCLUDING:

PILE SERVICE CAPACITY	10 TONS
PILE UPLIFT SERVICE CAPACITY	50 TONS
PILE LATERAL SERVICE CAPACITY	2 TONS

SEE GEOTECHNICAL REPORT FOR ADDITIONAL REQUIREMENTS AND INFORMATION. DESIGN VALUES SHALL BE FIELD VERIFIED BY QUALIFIED GEOTECHNICAL ENGINEER RETAINED BY THE OWNER.

FN-3 THE CONTRACTOR SHALL VERIFY FOUNDATION INSTALLATION AND CONSTRUCTION IS IN CONFORMANCE WITH THE RECOMMENDATIONS OUTLINED IN THE GEOTECHNICAL REPORT.

FN-4 CONTRACTOR SHALL BE RESPONSIBLE TO ADEQUATELY PROTECT ALL EXCAVATION. WHERE NECESSARY, SHEET AND SHORE THE EXCAVATION WITH ALL REQUIRED TIEBACKS AND BRACING AS DETERMINED BY CONTRACTOR'S STRUCTURAL ENGINEER.

FN-5 PROVIDE BRACING FOR ALL BASEMENT FOUNDATION WALLS PRIOR TO BACKFILLING. THIS BRACING SHALL REMAIN IN PLACE UNTIL ALL SLABS AND BEAMS FRAMING INTO WALL HAVE BEEN PLACED AND HAVE ATTAINED [100%] OF THEIR DESIGN STRENGTH.

FN-6 DO NOT BACKFILL AGAINST CANTILEVER RETAINING WALLS UNTIL THE CONCRETE HAS ATTAINED [100%] OF ITS DESIGN STRENGTH.

CM CONCRETE MATERIALS

CM-1 CONCRETE STRENGTH SHALL MEET THE FOLLOWING 28-DAY COMPRESSIVE STRENGTHS (f' c), UON:

SITE RETAINING WALLS	5,000 PSI
CAISSONS AND PILES	5,000 PSI
CAISSON CAPS	5,000 PSI
FOOTINGS, PILE CAPS AND PIERS	5,000 PSI
GRADE BEAMS	5,000 PSI
FOUNDATION WALLS, PILASTERS, BUTTRESSES	5,000 PSI
NON-SHRINK GROUT	8,000 PSI
SLAB ON GRADE	5,000 PSI
CONCRETE HOUSEKEEPING PADS, AND FILL SLABS	5,000 PSI
CONCRETE SHEARWALLS	5,000 PSI

CM-2 PROVIDE NORMALWEIGHT CONCRETE WITH CURED DENSITY OF 145 +/- 5 PCF, AND AGGREGATE CONFORMING TO ASTM C33, UON. WHERE INDICATED, PROVIDE LIGHTWEIGHT CONCRETE WITH CURED DENSITY OF 112+/-3 PCF AND AGGREGATE CONFORMING TO ASTM C330.

CM-3 THE USE OF CALCIUM CHLORIDE AND OTHER CHLORIDE CONTAINING AGENTS IS PROHIBITED. THE USE OF RECYCLED CONCRETE IS PROHIBITED. PLACEMENT WITHIN AND CONTACT BETWEEN ALUMINUM ITEMS, INCLUDING ALUMINUM CONDUIT, AND CONCRETE IS PROHIBITED.

CM-4 ALL CAST-IN-PLACE CONCRETE WILL EXPERIENCE DIFFERING VARIATIONS OF CRACKING. ANY ELEMENT EXPOSED TO DIRECT WEATHER AND/OR TEMPERATURE VARIATIONS DURING CONSTRUCTION OR IN THE FINAL CONDITION IS TO BE TREATED AND REGULARLY MAINTAINED TO PREVENT PROPAGATION OF CRACKS AND WATER PENETRATION. THE CONTRACTOR SHALL DEVELOP A REGULAR MAINTENANCE PROGRAM AND SUBMIT IT TO THE OWNER.

RE CONCRETE REINFORCEMENT

RE-1 ALL CONCRETE SHALL INCLUDE REINFORCEMENT. IF REINFORCEMENT IS NOT SPECIFICALLY INDICATED ON THE DRAWINGS VERIFY WITH THE STRUCTURAL ENGINEER.

RE-2 REINFORCEMENT SHALL CONFORM TO THE FOLLOWING STANDARDS AND MATERIAL PROPERTIES UON:

DEFORMED BARS:	ASTM A615
WELDABLE DEFORMED BARS:	ASTM A706
EPOXY COATED DEFORMED BARS:	ASTM A615 / A775
WELDED WIRE REINFORCEMENT	ASTM A1064
EPOXY COATED WELDED WIRE REINFORCEMENT	ASTM A1064 / A884

RE-3 DETAIL REINFORCEMENT BASED ON THE PROJECT REQUIREMENTS, ACI-318 AND ACI-315, UON.

RE-4 WHERE A 90-DEG, 135 –DEG OR 180-DEG HOOK IS GRAPHICALLY INDICATED, PROVIDE CORRESPONDING ACI STANDARD HOOKS UON.

RE-5 DOWELS SHALL MATCH SIZE AND SPACING OF MAIN REINFORCEMENT UON.

RE-6 REINFORCEMENT SHALL HAVE CONCRETE PROTECTION (CLEAR COVER) PER ACI 318 UNLESS OTHERWISE INDICATED ON THE DRAWINGS.

RE-7 LAP REINFORCEMENT ONLY AT LOCATIONS AS SPECIFICALLY DETAILED ON THE DRAWINGS EXCEPT REINFORCEMENT MARKED AS CONTINUOUS CAN BE SPLICED AT LOCATIONS DETERMINED BY CONTRACTOR USING TENSION LAP SPLICES (LTS). SEE LAP SPLICE AND EMBEDMENT SCHEDULE.
RE-8 UNLESS OTHERWISE NOTED ALL LAP SPLICES ARE TO BE TENSION LAP SPLICES PER LAP SPLICE AND EMBEDMENT SCHEDULE.

RE-9 PROVIDE MECHANICAL SPLICES FOR BARS LARGER THAN #11 OR WHERE INDICATED. PROVIDE TENSILE, PRE-QUALIFIED, WELDED OR THREADED MECHANICAL SPLICES UON.

RE-10 LAP WELDED WIRE REINFORCEMENT TWO PANEL SPACINGS, UON.

RE-11 PROVIDE LAP LOCATIONS AS FOLLOWS, UON:
A. GRADE BEAM / WALL (TOP HORIZONTAL REINFORCEMENT): AT CENTER OF SPAN
B. GRADE BEAM / WALL (BOTTOM HORIZONTAL REINFORCEMENT): AT SUPPORTS
C. WALL INSIDE FACE (VERTICAL REINFORCEMENT): AT SUPPORT
D. WALL OUTSIDE FACE (VERTICAL REINFORCEMENT): AT MIDHEIGHT OF WALL
E. UNLESS OTHERWISE NOTED TERMINATE BARS AT DISCONTINUOUS ENDS WITH STANDARD HOOKS.

RE-12 PROVIDE EPOXY COATED REINFORCEMENT AND ACCESSORIES IN AREAS OF DIRECT EXPOSURE TO THE ENVIRONMENT, CHEMICALS, OR DE-ICING FOR THE AREAS INDICATED ON THE DRAWINGS.

hMa
hanrahan Meyers architect,llp

ARCHITECT:
HANRAHAN MEYERS ARCHITECTS, LLP
6 MAIDEN LANE SUITE 510
NEW YORK, NY 10038
T: (212) 989-6026 F: (917) 591-9825

Cosentini

MEP ENGINEERS:
Cosentini Associates
Two Pennsylvania Plaza - Third Floor
NEW YORK, NY 10121
T: (212) 615-3760 F: (212) 615-3600

Thornton Tomasetti

STRUCTURAL ENGINEERS:
Thornton Tomasetti
51 Madison Avenue
NEW YORK, NY 10010
T: (917) 661-7800 F: (917) 661-7801

EK|A PLLC

LANDSCAPE ARCHITECTS:
Elizabeth Kennedy Landscape Architect, PLLC
Brooklyn Navy Yard Building 275 Room 202
63 Flushing Avenue Unit 264
BROOKLYN, NY 11205
T: (718) 569-8837 F: (718) 709-5885

PROJECT:

Kowsky Plaza Repair

401 South End Avenue
New York, NY 10280

PROPERTY INFORMATION:

NOTES:

Rev No.	Description	Date
1	COORDINATION SET	08.21.2015
2	BID SET	08.31.2015

DOB STAMPS AND SIGNATURE:

SEAL AND SIGNATURE:

DATE: 11/15/2015

DRAWN BY: Author

CHECKED BY: Checker

SHEET TITLE:

GENERAL NOTES

SHEET NUMBER:

S-002.00

CJ CONCRETE CONSTRUCTION JOINTS

CJ-1 PROVIDE CONSTRUCTION JOINTS IN ACCORDANCE WITH ACI-318. SUBMIT SHOP DRAWINGS SHOWING PROPOSED CONSTRUCTION JOINT LOCATIONS, DETAILS AND THE PLACEMENT SEQUENCE FOR THE STRUCTURAL ENGINEER'S APPROVAL PRIOR TO PROCEEDING WITH WORK.

CJ-2 NO HORIZONTAL CONSTRUCTION JOINTS WILL BE PERMITTED IN FOOTINGS, PILE CAPS, MAT FOUNDATIONS, GRADE BEAMS, BEAMS, UPTURNED BEAMS, SLABS, AND WALLS UNLESS SPECIFICALLY SHOWN ON THE DRAWINGS OR APPROVED IN WRITING BY THE DESIGN PROFESSIONALS PRIOR TO CONSTRUCTION.

CJ-3 PLACE VERTICAL CONSTRUCTION JOINTS TO PROVIDE A **60 FT** MAXIMUM LENGTH OF CONCRETE PLACEMENT AND LOCATE AS FOLLOWS:
A. FOUNDATION WALLS: MINIMUM OF **8 FT** FROM ANY WALL INTERSECTION, PILASTER, PIER, OR WALL OPENING
B. BEAMS AND GRADE BEAMS; WITHIN THE MIDDLE THIRD OF THE CLEAR SPAN AVOIDING LAP SPLICES, SUBJECT TO SER APPROVAL.

CJ-4 PROVIDE CONTINUOUS WATERSTOPS AT ALL CONSTRUCTION JOINTS EXPOSED TO SOIL OR WATER, AS DESCRIBED IN THE SPECIFICATIONS.

SS STRUCTURAL STEEL

SS-1 STEEL MATERIALS SHALL CONFORM TO THE FOLLOWING MINIMUM REQUIREMENTS UNLESS OTHERWISE NOTED ON THE CONTRACT DOCUMENTS:

ROLLED SHAPES AND CHANNELS: ASTM A572 OR A992, MIN. YIELD STRENGTH 50 KSI
ANGLES FOR TRUSSES AND BRACES: ASTM A36 MIN YIELD STRENGTH 36 KSI
MISCELLANEOUS ANGLES: ASTM A36
HOLLOW STRUCTURAL SECTIONS: ASTM A500 GRADE B, MIN YIELD STRENGTH 42 KSI FOR ROUND AND 46 KSI FOR RECTANGULAR HSS
SEAMLESS PIPE: ASTM A53 GRADE B, TYPE S, MIN YIELD STRENGTH 35 KSI.

SS-2 CONNECTION MATERIAL SHALL CONFORM TO THE FOLLOWING MINIMUM REQUIREMENTS OR AS NEEDED FOR CONNECTION DESIGN:

ANGLES: ASTM A36
WTs: ASTM A992
PLATES: ASTM A572 OR A529, MINIMUM YIELD STRENGTH 50 KSI
BOLTS: ASTM A325 OR A490
NUTS: ASTM A563
WASHERS: ASTM F436
ANCHOR RODS: ASTM F1554 GRADE 55 WITH WELDABILITY SUPPLEMENT S1
HEADED STUDS ASTM A 108, GRADE 1010 THROUGH 1020 HEADED STUD TYPE, COLD-FINISHED CARBON STEEL, AWS D1.1, TYPE B. ¾" DIAMETER UON
WELD ELECTRODES: E70XX

SS-3 WHERE NO CAMBER IS INDICATED, FABRICATE BEAMS SO THAT ANY NATURAL CAMBER IS UPWARD AFTER ERECTION.

SS-4 SPLICES SHALL BE ALLOWED ONLY AT LOCATIONS SPECIFICALLY INDICATED ON THE STRUCTURAL DRAWINGS UNLESS APPROVED OTHERWISE BY THE SER IN WRITING.

SS-5 FOR STEEL MEMBERS AND EMBEDMENTS EXPOSED TO WEATHER, PROVIDE HOT-DIPPED GALVANIZED FINISH.

SS-6 PROVIDE HOLES IN ALL STEEL AS REQUIRED TO PREVENT ANY ACCUMULATION OF WATER. ALL PENETRATIONS THROUGH MAIN MEMBERS SHALL NOT EXCEED 1 1/8" DIA. AND SHALL BE GROUND SMOOTH. THESE DRAINS MUST BE KEPT CLEAN AND OPEN.

SS-7 SHOW ALL COPES, HOLES, OPENINGS AND MODIFICATIONS REQUIRED IN STRUCTURAL STEEL MEMBERS FOR ERECTION OR THE WORK OF OTHER TRADES ON THE SHOP DRAWINGS FOR APPROVAL BY THE ARCHITECT AND STRUCTURAL ENGINEER.

SS-8 FIELD MODIFICATION OF STRUCTURAL STEEL IS PROHIBITED WITHOUT PRIOR APPROVAL OF THE ARCHITECT AND STRUCTURAL ENGINEER.

SS-9 THE CONTRACTOR SHALL SUBMIT A STEEL ERECTION PROCEDURE, PREPARED UNDER THE SUPERVISION OF A STRUCTURAL ENGINEER LICENSED IN THE STATE OF THE LOCATION OF THE PROJECT (THE CONTRACTOR'S ENGINEER) FOR REVIEW BY THE STRUCTURAL ENGINEER OF RECORD. THIS PROCEDURE MUST INCLUDE THE PROPOSED SURVEY REQUIRED BY THE STEEL SPECIFICATIONS.

SS-10 STEEL USING COMPLETE JOINT PENETRATION GROOVE WELDS THAT FUSE THROUGH THE THICKNESS OF THE FLANGE OR WEB SHALL HAVE A MINIMUM CHARPY V-NOTCH IMPACT TESTING VALUE AS FOLLOWS:

A. ASTM A6/A6M HOT-ROLLED SHAPES WITH A FLANGE THICKNESS EXCEEDING [2] INCHES AND BUILT-UP HEAVY SHAPES WITH PLATES EXCEEDING [2] INCHES IN THICKNESS: 20 FT-LB @ 70 DEG. F
B. REGARDLESS OF THICKNESS, ALL TRUSSES, LATERAL SYSTEM MEMBERS (INCLUDING COLUMNS, WIND GIRDERS, BRACES, ETC.): 20 FT-LB @ 70 DEG. F
C. STEEL EXPOSED TO TEMPERATURES IN SERVICE BELOW 50 DEG. F: 20 FT-LB @ [LAST + 70 DEG. F, 40 DEG. F MAX]
D. REGARDLESS OF THICKNESS, ALL TRUSSES, LATERAL SYSTEM MEMBERS (INCLUDING COLUMNS, WIND GIRDERS, BRACES, ETC) EXPOSED TO TEMPERATURES IN SERVICE BELOW 50 DEG. F: 30 FT-LB @ [LOWEST ANTICIPATED SERVICE TEMPERATURE + 70 DEG. F, 40 DEG. F MAX]
E. WELD METAL: 20 FT-LB @ MINUS 20 DEG. F AND 40 FT-LB @ 70 DEG. F
F. WELD METAL EXPOSED TO TEMPERATURES IN SERVICE BELOW 50 DEG. F: 20 FT-LB @ MINUS 20 DEG. F AND 40 FT-LB @ [LAST + 20 DEG. F, 40 DEG. F MAX]
G. TESTING IS TO BE IN ACCORDANCE WITH ASTM A6/A6M, SUPPLEMENTARY REQUIREMENT S30, CHARPY V- NOTCH IMPACT TEST FOR STRUCTURAL SHAPES – ALTERNATE CORE LOCATION, AT ROLLED SHAPES AND ASTM A673 FOR PLATES, AT ANY PERMITTED LOCATIONS.

LAST – LOWEST ANTICIPATED SERVICE TEMPERATURE. IN ABSENCE OF MORE ACCURATE DATA, THE RECORD LOW TEMPERATURE FOR THE PROJECT SITE

SC STRUCTURAL STEEL CONNECTIONS

SC-1 ALL STEEL DETAILS AND CONNECTIONS SHALL BE IN ACCORDANCE WITH THE REQUIREMENTS OF "SPECIFICATION FOR STRUCTURAL STEEL BUILDINGS", AISC-LOAD AND RESISTANCE FACTOR DESIGN.

SC-2 ALL CONNECTIONS, UNLESS INDICATED AS BEING COMPLETELY DESIGNED ON THE STRUCTURAL DRAWINGS, SHALL BE DESIGNED AND DETAILED BY A LICENSED STRUCTURAL ENGINEER IN THE STATE WHERE THE PROJECT IS LOCATED. THE DESIGN AND DETAILING SHALL COMPLY WITH ALL APPLICABLE CODES AND SPECIFICATION SECTIONS.

SC-3 UNLESS OTHERWISE NOTED, DETAILS INDICATED ON DRAWINGS INDICATE GENERAL CRITERIA FOR DESIGN AND DETAILING OF CONNECTIONS. DETAILS INDICATED ON DRAWINGS ARE NOT INTENDED TO CONVEY COMPLETE CONNECTOR SIZES, PLATE SIZES, WELD SIZES, NUMBER OF BOLTS, OR ANY OTHER SPECIFIC INFORMATION THAT IS OBTAINED THROUGH DESIGNING OF AN INDIVIDUAL CONNECTION FOR A GIVEN SET OF LOADS. THESE DETAILS DO NOT SHOW ERECTION AIDS. PROVIDE ERECTION AIDS AS REQUIRED AND REMOVE THEM AFTER WORK IS COMPLETE.

SC-4 SUBMIT CONNECTIONS NOT SPECIFICALLY DETAILED ON THE DRAWINGS TO THE SER FOR REVIEW PRIOR TO REVIEW OF SHOP DRAWINGS. FOR BIDDING PURPOSES, WHERE NO MOMENT IS INDICATED ON DRAWINGS PROVIDE FULL MOMENT CAPACITY OF MEMBER (.9 Fy Z) AND WHERE NO VERTICAL SHEAR IS INDICATED ON DRAWINGS PROVIDE FULL SHEAR CAPACITY (.54 Fy d tw).

SC-5 ALTERNATE CONNECTIONS TO THOSE SHOWN ON DRAWINGS WILL ONLY BE CONSIDERED ACCEPTABLE IF CONTRACTOR FORMALLY SUBMITS ALTERNATES AND THE SER APPROVES THE SUBMITTAL.

SC-6 FOR CONNECTION DESIGN AND DETAILING, SET CONNECTION WORK POINT AT INTERSECTION OF MEMBER CENTERLINES, UON.
PLATES ASTM A572 OR A529, MIN YIELD STRENGTH 50 KSI
SC-7 DESIGN ALL CONNECTIONS FOR FORCES INDICATED ON THE DRAWINGS. CONNECTION DESIGN FORCES INDICATED ON THE DRAWINGS ARE FACTORED UON.

SC-8 DESIGN OF MEMBERS IS BASED ON ASSUMPTION OF [3/4-INCH] DIAMETER AND [1-INCH] DIAMETER A325 OR A490 BOLTS. USE NO MORE THAN TWO BOLT DIAMETERS, ONE GRADE PER DIAMETER, SKIP ONE SIZE BETWEEN DIAMETERS.

SC-9 BEAM CONNECTION DESIGN NOTES

SEE PLANS AND ELEVATIONS FOR BEAM REACTIONS AND MOMENTS THAT ARE LARGER THAN THE VALUE SHOWN IN SCHEDULES.

DEVELOP THE LARGER OF THE BEAM SHEAR REACTION SCHEDULED, SHOWN ON PLANS OR SHOWN ON ELEVATIONS.

DEVELOP THE LARGER OF THE MOMENT SCHEDULED, SHOWN ON PLANS OR SHOWN ON ELEVATIONS.

DEVELOP THE LARGER OF THE AXIAL FORCE DENOTED AS P OR TF SHOWN ON PLANS OR SHOWN ON ELEVATIONS. SEE STEEL BEAM LEGEND.

WHERE NO AXIAL FORCE IS SHOWN ALL BEAM CONNECTIONS SHALL BE DESIGNED FOR A MINIMUM AXIAL FORCE EQUAL TO 5% OF THE VERTICAL SHEAR REACTION ACTING CONCURRENTLY WITH THE VERTICAL BEAM SHEAR

ALL BEAM REACTIONS, AXIAL FORCES AND MOMENTS ACT CONCURRENTLY. UON, BEAM REACTIONS ACT IN GRAVITY DIRECTION WHILE AXIAL FORCES AND MOMENTS ARE TO BE CONSIDERED REVERSIBLE.

EXCEPT WHERE "SNUG TIGHT" INSTALLATION IS SPECIFICALLY PERMITTED ON DRAWINGS or "SLIP CRITICAL" DETAILING IS REQUIRED, ALL HIGH STRENGTH BOLTS SHALL BE INSTALLED AS FULL PRETENSIONED BOLTS.

AT A MINIMUM ALL BOLTED MOMENT AND AXIAL CONNECTION SHALL HAVE PRETENSIONED BOLTS IN STANDARD HOLES.

BOLTED MOMENT CONNECTIONS AT CANTILEVERS AND BACKSPANS SHALL USE SLIP CRITICAL BOLTS.

DO NOT USE OVERSIZED OR SLOTTED HOLES FOR ANY CONNECTIONS UNLESS SPECIFICALLY INDICATED ON THE DRAWINGS OR APPROVED IN WRITING BY THE SER.

SC-10 ALL WELDING SHALL CONFORM TO THE REQUIREMENTS OF THE STRUCTURAL WELDING CODE, ANSI/AWS D1.1, LATEST EDITION. ALL WELD SIZES SHALL BE THE LARGER OF THE SIZE REQUIRED BY CONNECTION FORCES, THE MINIMUM SIZE PER ANSI/AWS D1.1, OR 3/16 INCH MINIMUM FILLET WELD UON. ANY WELD SIZES SHOWN ON THE DESIGN DRAWINGS ARE CONSIDERED EFFECTIVE WELD SIZES AND SHALL BE INCREASED IN ACCORDANCE WITH AWS AS REQUIRED BY GAPS OR SKEWS BETWEEN COMPONENTS.

SC-11 USE RUNOFF TABS AT ALL BEVEL AND FULL PENETRATION WELDS. REMOVE RUNOFF TABS BY NEAT CUTS AFTER WELD IS COMPLETED. GRIND SMOOTH WHERE REQUIRED BY DETAIL.

SC-12 WHERE REQUIRED BY DETAIL REMOVE WELD BACK UP BARS AND GRIND SMOOTH AFTER WELD IS COMPLETED.

SC-13 FOR TRUSS DETAILING USE A MINIMUM BOLT SPACING OF 3 TIMES THE BOLT DIAMETER AND A MINIMUM EDGE DISTANCE OF 2 INCHES. ALSO REFER TO TYPICAL DETAILS.

SC-14 DESIGN, DETAIL, FURNISH AND INSTALL STIFFENERS, CONTINUITY PLATES, DOUBLER PLATES, OR OTHER NECESSARY ADDITIONAL LOCAL STRENGTHENING MEASURES AS REQUIRED. MEMBER SIZES INDICATED ON THE DRAWINGS ARE BASED ON MEMBER BEHAVIOR AWAY FROM CONNECTIONS.

hMa
hanrahan Meyers architect,llp

ARCHITECT:
HANRAHAN MEYERS ARCHITECTS, LLP
6 MAIDEN LANE SUITE 510
NEW YORK, NY 10038
T: (212) 989-6026 F: (917) 591-9825

Cosentini

MEP ENGINEERS:
Cosentini Associates
Two Pennsylvania Plaza - Third Floor
NEW YORK, NY 10121
T: (212) 615-3760 F: (212) 615-3600

Thornton Tomasetti

STRUCTURAL ENGINEERS:
Thornton Tomasetti
51 Madison Avenue
NEW YORK, NY 10010
T: (917) 661-7800 F: (917) 661-7801

EK|A PLLC

LANDSCAPE ARCHITECTS:
Elizabeth Kennedy Landscape Architect, PLLC
Brooklyn Navy Yard Building 275 Room 202
63 Flushing Avenue Unit 264
BROOKLYN, NY 11205
T: (718) 569-8837 F: (718) 709-5885

PROJECT:

Kowsky Plaza Repair

401 South End Avenue
New York, NY 10280

PROPERTY INFORMATION:

NOTES:

Rev No.	Description	Date
1	COORDINATION SET	08.21.2015
2	BID SET	08.31.2015

DOB STAMPS AND SIGNATURE:

SEAL AND SIGNATURE:

DATE: 11/15/2015

DRAWN BY: Author

CHECKED BY: Checker

SHEET TITLE:

GENERAL NOTES

SHEET NUMBER:

S-003.00

SI SPECIAL INSPECTIONS

SI-1 THE FOLLOWING STRUCTURAL ITEMS REQUIRE SPECIAL TESTING AND/OR INSPECTIONS:

ITEM	NYC CODE REF SECTION
DEEP FOUNDATION ELEMENTS	BC 1704.8
CAST IN PLACE CONCRETE	BC 1704.4
CONCRETE DESIGN MIX	BC 1905.3, BC 1913.5
CONCRETE SAMPLING AND TESTING	BC 1905.6, BC 1913.10
REINFORCING STEEL	BC 1903.5
STRUCTURAL STEEL - WELDING	BC 1704.3.1
STRUCTURAL STEEL - DETAILS	BC 1704.3.2
STRUCTURAL STEEL - HIGH STRENGTH BOLTING	BC 1704.3.3
STRUCTURAL WOOD FRAME	BC 110.3.3

AC ARCHITECTURAL CLADDING

AC-1 TYPICAL DETAILS INDICATE GENERAL CRITERIA FOR ASSUMED CONNECTIONS OF ARCHITECTURAL CLADDING TO BASE BUILDING STRUCTURE. PROVIDE DESIGNS THAT MEET INDICATED CRITERIA AND CONFORM TO LISTED CODES AND STANDARDS. REFER TO SUBMITTALS SECTION IN THESE GENERAL NOTES FOR ADDITIONAL REQUIREMENTS.

PA POST-INSTALLED ANCHORS

PA-1 ADHESIVE ANCHOR SYSTEMS USED FOR DESIGN:

SEISMIC DESIGN CATEGORY A - F

ADHESIVE: HILTI HIT-HY 200 HILTI, TULSA, OK

THREADED ROD: HILTI HAS

OVERHEAD AND/OR CONSTANT TENSION ADHESIVE ANCHOR INSTALLATIONS NOT SHOWN ON THE DRAWINGS SHALL NOT BE PERMITTED UNLESS EACH CONDITION IS REVIEWED AND APPROVED IN WRITING BY THE SER.

PA-2 PROOF TESTING OF ADHESIVE ANCHORS SHALL BE PERFORMED IN ACCORDANCE WITH THE PROJECT SPECIFICATIONS. UNLESS NOTED OTHERWISE, ADHESIVE ANCHOR PROOF TENSION LOADS SHALL BE PER THE ADHESIVE ANCHOR PROOF TENSION SCHEDULES.

PA-3 FIELD DRILLED EXPANSION ANCHOR SYSTEMS USED FOR DESIGN:

SEISMIC DESIGN CATEGORY A - F
KWIK BOLT TZ HILTI, TULSA, OK
SEISMIC DESIGN CATEGORY A - B AT LOCATIONS SPECIFICALLY NOTED IN DETAILS ONLY
KWIK BOLT 3 HILTI, TULSA, OK

PA-4 PROOF TESTING OF EXPANSION ANCHORS SHALL BE PERFORMED IN ACCORDANCE WITH THE PROJECT SPECIFICATIONS. UNLESS NOTED OTHERWISE, EXPANSION ANCHOR PROOF TORQUE LOADS SHALL BE PER THE EXPANSION ANCHOR PROOF TORQUE SCHEDULES.

PA-5 FIELD DRILLED THREADED SCREW ANCHOR SYSTEMS USED FOR DESIGN:

HUS-EZ HILTI, TULSA, OK

PA-6 ALTERNATIVE SYSTEM EQUIVALENT TO OR EXCEEDING THE PROPERTIES OF THE SYSTEMS ABOVE WILL BE CONSIDERED AS A SUBSTITUTION REQUEST. SEE PROJECT SPECIFICATIONS..

PA-7 ANCHORS ARE TO BE MINIMUM 1/2" DIAMETER WITH A MINIMUM EMBEDMENT OF 4 1/2", UON.

PA-8 INSTALL ANCHORS TO MEET THE REQUIREMENTS INDICATED IN THE CONTRACT DOCUMENTS AND THE CURRENT MANUFACTURER'S PUBLISHED INSTALLATION INSTRUCTIONS (MPII).

PA-9 LOCATE, BY NON-DESTRUCTIVE MEANS, AND AVOID ALL EXISTING REINFORCEMENT PRIOR TO INSTALLATION OF ANCHORS. IF EXISTING REINFORCING LAYOUT PROHIBITS THE INSTALLATION OF ANCHORS AS INDICATED IN THE DRAWINGS, THE CONTRACTOR SHALL NOTIFY THE DESIGN PROFESSIONALS IMMEDIATELY.

PA-10 INSTALL MASONRY ANCHORS IN SOLID MASONRY OR IN HOLLOW MASONRY THAT HAS BEEN GROUTED SOLID AT LEAST ONE COURSE ABOVE AND ONE COURSE BELOW THE ANCHOR, UON.

PA-11 SEE PROJECT SPECIFICATIONS FOR POST-INSTALLED ANCHOR INSPECTION REQUIREMENTS.

BNBID NOTES

BN-1 THE CONTRACTOR'S AND ALL SUBCONTRACTOR'S BIDS SHALL INCLUDE ADD/DEDUCT UNIT PRICES FOR EACH OF THE ITEMS LISTED. THE COST FOR ANY UNUSED PORTIONS OF THE LISTED QUANTITIES SHALL BE CREDITED TO THE OWNER.

BN-2 THIS MATERIAL SHALL BE IN ADDITION TO THAT INDICATED ON THE CONTRACT DOCUMENTS. THE BID PRICE SHALL PROVIDE FOR THE DETAILING, FABRICATION, DELIVERY, AND INSTALLATION OF THE MATERIAL IN THE BUILDING IN SUCH SIZES AND FORMS AS THE ARCHITECT AND STRUCTURAL ENGINEER MAY DIRECT, WITHOUT ADDITIONAL COST TO THE OWNER.

BN-3 THE REINFORCED CONCRETE SUBCONTRACTOR SHALL INCLUDE IN THE BASE BID THE IN-PLACE COST OF THE FOLLOWING ITEMS:

A [XX] CUBIC YARDS OF NORMALWEIGHT CONCRETE (f'c= [X,XXX] PSI).
B. [XX] CUBIC YARDS OF LIGHTWEIGHT CONCRETE (f'c= [X,XXX] PSI).
C. [XX] TONS OF REINFORCING BARS - SIZES #4 THROUGH #9.
D. [XX] TONS OF REINFORCING BARS - SIZES #10 AND #11.

BN-4 THE STRUCTURAL STEEL SUBCONTRACTOR SHALL INCLUDE IN THE BASE BID THE IN-PLACE COST OF THE FOLLOWING ITEMS:

A. [XX] TONS OF MEMBERS WEIGHING 50 POUNDS PER LINEAR FOOT AND GREATER.
B. [XX] TONS OF MEMBERS WEIGHING LESS THAN 50 POUNDS PER LINEAR FOOT.
C. [XX] BEAM WEB PENETRATIONS AND REINFORCEMENT AS INDICATED IN THE TYPICAL DETAILS.

BN-5 IF NO CONNECTION FORCES ARE INDICATED ON THE DRAWINGS, STRUCTURAL STEEL SUBCONTRACTOR SHALL ASSUME THAT BEAM AND GIRDER CONNECTIONS ARE CAPABLE OF DEVELOPING AT LEAST 50 PERCENT OF THE UNIFORMLY DISTRIBUTED LOAD CAPACITY OF THE MEMBER USING THE REACTION FROM THE ALLOWABLE LOAD OF THE BEAM AS TABULATED IN THE AISC LRFD MANUAL OF STEEL CONSTRUCTION. FOR COMPOSITE BEAMS MULTIPLY THE UNIFORMLY DISTRIBUTED LOAD CAPACITY BY 2.0 TO ACCOUNT FOR THE TRANSFORMED COMPOSITE CROSS SECTION.

BN-6 CONTRACT DOCUMENTS ISSUED FOR BID ARE NOT ISSUED FOR CONSTRUCTION UNLESS SPECIFICALLY NOTED AS "ISSUED FOR CONSTRUCTION".

IPU PURPOSE OF ISSUANCE

PU-1 THESE DRAWINGS IDENTIFIED AS AN "ISSUED FOR BID DATED 8/28/15.

ADHESIVE ANCHOR PROOF LOAD SCHEDULE

A615 GR 60 REINFORCEMENT IN NORMAL WEIGHT CONCRETE (3000 PSI MIN)

BAR SIZE	EMBEDMENT (IN)	TENSION TEST VALUE (LBS)		
		HILTI HIT-HY 200	HILTI HIT-RE 500-SD	SIMPSON SET-XP
#4	4	6010	6150	5690
#5	5	9940	9330	7640
#6	6	13660	12860	9770
#7	7	15750	13550	12250
#8	8	20670	16540	15430
#9	9	26270	19580	NA
#10	10	32500	22060	24100

ADHESIVE ANCHOR PROOF LOAD SCHEDULE

A193 B7 THREADED ROD IN NORMAL WEIGHT CONCRETE (3000 PSI MIN)

THREADED ROD DIAMETER (IN)	EMBEDMENT (IN)	TENSION TEST VALUE (LBS)		
		HILTI HIT-HY 200	HILTI HIT-RE 500-SD	SIMPSON SET-XP
3/8	3	3360	3510	3620
1/2	4	6010	6150	5690
5/8	5	9440	9330	7640
3/4	6	7120	12860	9770
7/8	7	15750	13620	12250
1	8	20670	16440	15430
1-1/4	10	32500	22060	24100

TENSION PROOF LOAD NOTES:
1. PROOF TESTING OF REINFORCEMENT FOR CONCRETE HOUSEKEEPING PADS IS NOT REQUIRED.
2. SEE PROJECT SPECIFICATIONS FOR ADDITIONAL INFORMATION REGARDING PROOF TESTING OF ADHESIVE ANCHORS.

EXPANSION ANCHOR PROOF LOAD SCHEDULE

ANCHORS IN NORMAL WEIGHT CONCRETE (3000 PSI MIN)

ANCHOR DIAMETER (IN)	TORQUE TEST VALUE (FT-LBS)	
	HILTI KWIK BOLT TZ	SIMPSON STRONG-BOLT 2
3/8	25	30
1/2	40	60
5/8	60	90
3/4	110	150

EXPANSION ANCHOR PROOF LOAD SCHEDULE

ANCHORS IN LIGHTWEIGHT CONCRETE (3000 PSI MIN)

ANCHOR DIAMETER (IN)	TORQUE TEST VALUE (FT-LBS)	
	HILTI KWIK BOLT TZ	SIMPSON STRONG-BOLT 2
3/8	25	30
1/2	40	60
5/8	60	90
3/4	NA	150

TORQUE PROOF LOAD NOTES:
1. SEE PROJECT SPECIFICATIONS FOR ADDITIONAL INFORMATION REGARDING PROOF TESTING OF EXPANSION ANCHORS.

ABBREVIATIONS AND SYMBOLS

Note – Abbreviations are included in the REVIT Template title sheet]

ABBREVIATION	DESCRIPTION
ADDL	ADDITIONAL
ADJ	ADJACENT
ALT	ALTERNATE
APPRX	APPROXIMATE
ARCH	ARCHITECT OR ARCHITECTURAL
B/	BOTTOM OF
B/B	BACK TO BACK
BAL	BALANCE
BLDG	BUILDING
BLK	BLOCK
BLKG	BLOCKING
BM	BEAM
BOT	BOTTOM
BRDG	BRIDGING
BRG	BEARING
BTWN	BETWEEN
C	COMPRESSION
C/C	CENTER TO CENTER
CIP	CAST-IN-PLACE
CL	CENTER LINE
CLR	CLEAR OR CLEARANCE
CMU	CONCRETE MASONRY UNIT
COL	COLUMN
COMP	COMPRESSION
CONC	CONCRETE
CONN	CONNECTION(S)
CONST	CONSTRUCTION
CONT	CONTINUOUS
db	REINFORCING BAR DIAMETER
DBL	DOUBLE
DCW	DEMAND CRITICAL WELD
DEG	DEGREE(S)
DET	DETAIL
DIA	DIAMETER
DIAG	DIAGONAL
DIM(S)	DIMENSION(S)
DL	DEAD LOAD
DWG(S)	DRAWING(S)
DWL	DOWEL(S)
EA	EACH
ECC	ECCENTRICITY
EF	EACH FACE
EL	ELEVATION
ELEC	ELECTRICAL
ENGR	ENGINEER
EOS	EDGE OF SLAB
EQ	EQUAL
EQUIP	EQUIPMENT
EW	EACH WAY
EXP	EXPANSION
EXST	EXISTING
EXT	EXTERIOR
F/F	FACE TO FACE
FIN	FINISH(ED)
FLR	FLOOR
FND	FOUNDATION
FP	FIREPROOF(ING)
FS	FAR SIDE
FTG	FOOTING
GA	GAGE, GAUGE
GALV	GALVANIZED
GB	GRADE BEAM
GEN	GENERAL
GR	GRADE
HK	HOOK
HORIZ	HORIZONTAL
HP	HIGH POINT
HT	HEIGHT
ID	INSIDE DIAMETER
IF	INSIDE FACE
INFO	INFORMATION
INT	INTERIOR
INTRM	INTERMEDIATE
JST(S)	JOIST(S)
JT	JOINT
K	KIPS (1,000 POUNDS)
KLF	KIP PER LINEAR FOOT
KSF	KIP PER SQUARE FOOT
LL	LIVE LOAD
LLH	LONG LEG HORIZONTAL
LLV	LONG LEG VERTICAL
LONG	LONGITUDINAL
LP	LOW POINT
LW	LIGHTWEIGHT
LWC	LIGHTWEIGHT CONCRETE
M	MOMENT
MATL	MATERIAL
MAX	MAXIMUM
MC	MOMENT CONNECTION(S)

ABBREVIATION	DESCRIPTION
MECH	MECHANICAL
MEP	MECHANICAL, ELECTRICAL, PLUMBING, FIRE PROTECTION
MEZZ	MEZZANINE
MFR	MANUFACTURER
MID	MIDDLE
MIN	MINIMUM
MISC	MISCELLANEOUS
NIC	NOT IN CONTRACT
NO	NUMBER
NOM	NOMINAL
NS	NEAR SIDE
NTS	NOT TO SCALE
NW	NORMAL WEIGHT
NWC	NORMALWEIGHT CONCRETE
OC	ON CENTER
OD	OUTSIDE DIAMETER
OF	OUTSIDE FACE
OH	OPPOSITE HAND
OPNG(S)	OPENING(S)
OPP	OPPOSITE
OSL	OUTSTANDING LEG
PC	PIECE
PCY	POUNDS PER CUBIC YARD
PERP	PERPENDICULAR
PG	PLATE GIRDER
PL	PLATE
PRC	PRECAST
PRLL	PARALLEL
PSF	POUNDS PER SQUARE FOOT
PSI	POUNDS PER SQUARE INCH
PT	POINT OR POST-TENSION(ED) OR (ING)
RAD	RADIUS
REF	REFERENCE
REINF	REINFORCE(D) (ING) OR (MENT)
REQD	REQUIRED
S&T	SHRINKAGE AND TEMPERATURE
SCHED	SCHEDULE(D)
SDL	SUPERIMPOSED DEAD LOAD
SECT	SECTION
SER	STRUCTURAL ENGINEER OF RECORD
SF	SQUARE FOOT (FEET)
SHT	SHEET
SIM	SIMILAR
SLRS	SEISMIC LOAD RESISTING SYSTEM
SOG	SLAB ON GRADE
SP	SPACE
SPEC(S)	SPECIFICATION(S)
STD	STANDARD
STL	STEEL
STR	STRUCTURE
STRCTL	STRUCTURAL
SYM	SYMMETRICAL
T	TENSION
T&B	TOP AND BOTTOM
T/	TOP OF
TEMP	TEMPERATURE OR TEMPORARY
TEN	TENSION
THK	THICK OR THICKNESS
TYP	TYPICAL
UON	UNLESS OTHERWISE NOTED
V	SHEAR
VERT	VERTICAL
VIF	VERIFY IN FIELD
W/	WITH
W/O	WITHOUT
WD	WOOD
WP	WORK POINT
WPFG	WATERPROOFING
WS	WATERSTOP
WWR	WELDED WIRE REINFORCEMENT

hMa
hanrahan Meyers architect,llp

ARCHITECT:
HANRAHAN MEYERS ARCHITECTS, LLP
6 MAIDEN LANE SUITE 510
NEW YORK, NY 10038
T: (212) 989-6026 F: (917) 591-9825

Cosentini

MEP ENGINEERS:
Cosentini Associates
Two Pennsylvania Plaza - Third Floor
NEW YORK, NY 10121
T: (212) 615-3760 F: (212) 615-3600

Thornton Tomasetti

STRUCTURAL ENGINEERS:
Thornton Tomasetti
51 Madison Avenue
NEW YORK, NY 10010
T: (917) 661-7800 F: (917) 661-7801

EK|A PLLC

LANDSCAPE ARCHITECTS:
Elizabeth Kennedy Landscape Architect, PLLC
Brooklyn Navy Yard Building 275 Room 202
63 Flushing Avenue Unit 264
BROOKLYN, NY 11205
T: (718) 569-8837 F: (718) 709-5885

PROJECT:

Kowsky Plaza Repair

401 South End Avenue
New York, NY 10280

PROPERTY INFORMATION:

NOTES:

Rev No.	Description	Date
1	COORDINATION SET	08.21.2015
2	BID SET	08.31.2015

DOB STAMPS AND SIGNATURE:

SEAL AND SIGNATURE:

DATE: 11/15/2015
DRAWN BY: Author
CHECKED BY: Checker

SHEET TITLE:
GENERAL NOTES

SHEET NUMBER:

S-004.00

WOOD FRAMING

1. SPECIFICATION AND STANDARDS:
   A. DESIGN AND DETAILING OF CONNECTIONS SHALL CONFORM TO THE NATIONAL DESIGN SPECIFICATION FOR WOOD CONSTRUCTION (2005 EDITION)

2. MATERIALS:
   A. USE ONLY STRESS GRADE LUMBER WITH THE FOLLOWING MINIMUM PROPERTIES FOR ALL DIMENSIONAL LUMBER FRAMING EXCEPT FOR STUDS (#2 DOUGLAS FIR LARCH OR BETTER):

SIZE OF MEMBER	Fb(psi)
2X4, 4X4	1500/1725
2X6, 4X6	1250/1425
2X8, 4X8	1200/1375
2X10, 4X10	1050/1200
2X12, 4X12	975/1125

   MODULES OF ELASTICITY (E) 1,600,000 PSI FOR ALL MEMBERS. ALLOWABLE SHEAR STRESS (Fv) 90 PSI FOR ALL MEMBERS.
   REQUIRED PROPERTIES LISTED ABOVE ARE SERVICE (ASD) VALUES
   B. NAILS: COMMON WIRE NAILS (ASTM F1667). WHERE ROUGH CARPENTRY IS EXPOSED TO WEATHER. IN GROUND CONTRACT OR IN AREAS OF HIGH RELATIVE HUMIDITY, PROVIDE HOT-DIPPED GALVANIZED NAILS COMPLYING WITH ASTM A153.
   C. CONNECTION PLATES: ASTM A572 GRADE 50
   D. BOLTS: ASTM A307 WITH 2 WASHERS
   E. USE ONLY PLYWOOD OR ORIENTED STRAND BOARD (OSB) WITH THICKNESS AND PANEL INDEX AS INDICATED ON DRAWINGS. ALL SHEATHING TO HAVE EXTERIOR GLUE.
   F. PRESERVATIVE TREATMENT:
      1. AWPA STANDARDS C2 (LUMBER) AND C9 (PLYWOOD)
      2. PRESSURE-TREAT ABOVE-GROUND ITEMS WITH WATER-BOURNE PRESERVATIVES TO 0.25 PCF RETENTION.
      3. PRESSURE-TREAT MEMBERS IN CONTACT WITH GROUND WITH WATER-BOURNE PRESERVATIVES TO 0.40 PCF RETENTION.
   G. GLULAM MEMBERS: ALL GLULAM SHALL BE GRADE 24F-V10, PLANT MANUFACTURED AND GLUED IN A CONTINUOUS PROCESS. DESIGN IN ACCORDANCE WITH REFERENCE STANDARD 1A ABOVE.
   H. ALL WOOD EXPOSED TO WEATHER TO BE TREATED.

3. CONSTRUCTION REQUIREMENTS:
   A. MAKE ALL CUTS TRUE AND SQUARE FOR FULL BEARING AT STRUCTURAL JOINTS.
   B. BOLT HOLES AND PLATES TO BE PLACED AS SHOWN ON DETAILS AND TO PROVIDE SPECIFIED SPACING, END DISTANCES, AND EDGE DISTANCES.
   C. PROVIDE WOOD STRUCTURAL PANELS NAILING AS RECOMMENDED BY THE APA OR AS SHOWN ON THE STRUCTURAL PLANS.
   D. CONNECT ALL FRAMING SECURELY TOGETHER WITH NAILS, SPIKES, OR FRAMING ANGLES.

hMa
hanrahan Meyers architect,llp

ARCHITECT:
HANRAHAN MEYERS ARCHITECTS, LLP
6 MAIDEN LANE SUITE 510
NEW YORK, NY 10038
T: (212) 989-6026 F: (917) 591-9825

Cosentini

MEP ENGINEERS:
Cosentini Associates
Two Pennsylvania Plaza - Third Floor
NEW YORK, NY 10121
T: (212) 615-3760 F: (212) 615-3600

Thornton Tomasetti

STRUCTURAL ENGINEERS:
Thornton Tomasetti
51 Madison Avenue
NEW YORK, NY 10010
T: (917) 661-7800 F: (917) 661-7801

EK | A
PL | C

LANDSCAPE ARCHITECTS:
Elizabeth Kennedy Landscape Architect, PLLC
Brooklyn Navy Yard Building 275 Room 202
63 Flushing Avenue Unit 264
BROOKLYN, NY 11205
T: (718) 569-8837 F: (718) 709-5885

PROJECT:

Kowsky Plaza
Repair

401 South End Avenue
New York, NY 10280

PROPERTY INFORMATION:

NOTES:

Rev No.	Description	Date
1	COORDINATION SET	08.21.2015
2	BID SET	08.31.2015

DOB STAMPS AND SIGNATURE:

SEAL AND SIGNATURE:

DATE: 11/15/2015

DRAWN BY: Author

CHECKED BY: Checker

SHEET TITLE:

GENERAL
WOOD
NOTES

SHEET NUMBER:

S-005.00

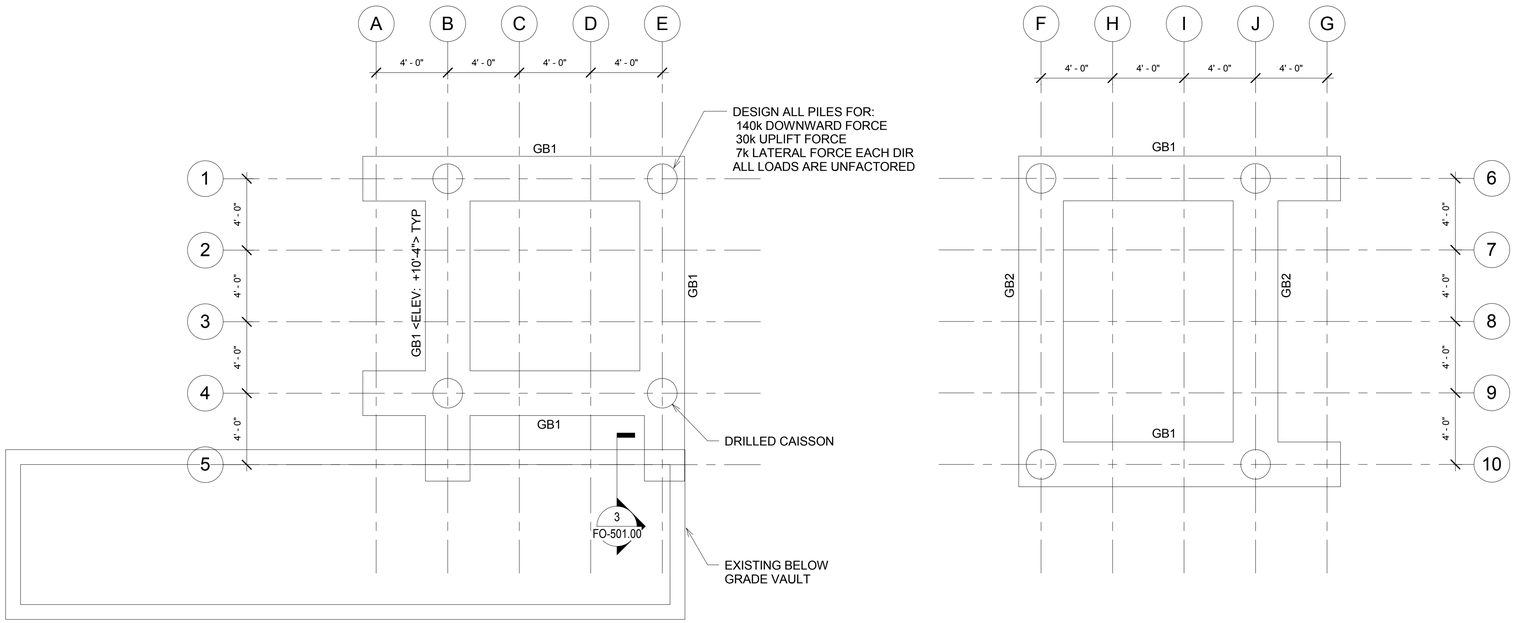

1 FOUNDATION PLAN
1/4" = 1'-0"

SHEET NOTES:

1. T/STRUCTURAL SLAB EL+12' UON THUS:

   X" — X - INDICATES CHANGE IN T/STRUCTURAL SLAB ELEVATION

2. <XX'-XX"> INDICATES ELEVATION PER NAVD DATUM
3. FOR ADDITIONAL INFORMATION REFER TO THE FOLLOWING DRAWINGS:

DRAWING LISTS, GENERAL NOTES, AND LOADING DIAGRAMS	S-0 SERIES DRAWINGS
TYPICAL FOUNDATION DETAILS	F0 SERIES DRAWINGS
STRUCTRAL PLANS	S-1 SERIES DRAWINGS
BUILDING SECTIONS	S-2 SERIES DRAWINGS

3. NOTATIONS:

GB — INDICATES GRADE BEAM .
SEE FO-502.00 FOR SCHEDULE

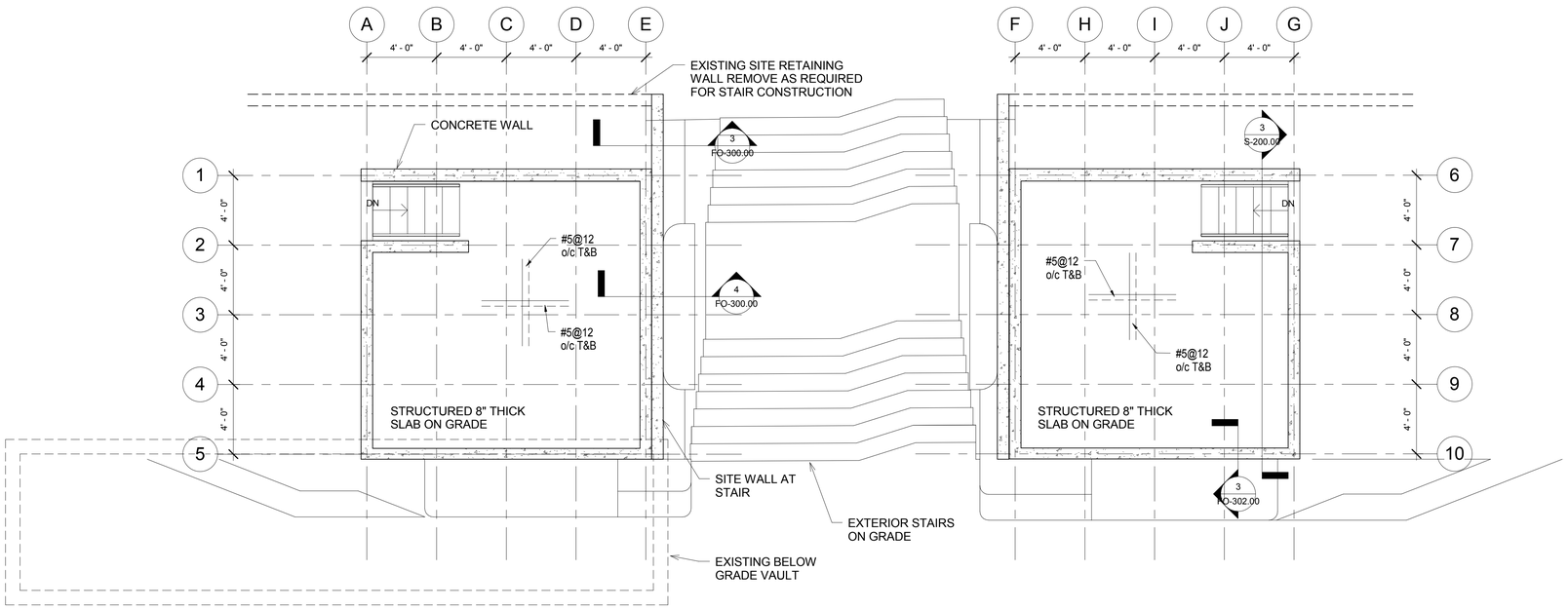

2 STRUCTURAL SLAB ON GRADE PLAN
1/4" = 1'-0"

hMa
hanrahan Meyers architect,llp

ARCHITECT:
HANRAHAN MEYERS ARCHITECTS, LLP
6 MAIDEN LANE SUITE 510
NEW YORK, NY 10038
T: (212) 989-6026 F: (917) 591-9825

Cosentini

MEP ENGINEERS:
Cosentini Associates
Two Pennsylvania Plaza - Third Floor
NEW YORK, NY 10121
T: (212) 615-3760 F: (212) 615-3600

Thornton Tomasetti

STRUCTURAL ENGINEERS:
Thornton Tomasetti
51 Madison Avenue
NEW YORK, NY 10010
T: (917) 661-7800 F: (917) 661-7801

EK|A PLLC

LANDSCAPE ARCHITECTS:
Elizabeth Kennedy Landscape Architect, PLLC
Brooklyn Navy Yard Building 275 Room 202
63 Flushing Avenue Unit 264
BROOKLYN, NY 11205
T: (718) 569-8837 F: (718) 709-5885

PROJECT:

Kowsky Plaza
Repair

401 South End Avenue
New York, NY 10280

PROPERTY INFORMATION:

NOTES:

Rev No.	Description	Date
1	COORDINATION SET	08.21.2015
2	BID SET	08.31.2015

DOB STAMPS AND SIGNATURE:

SEAL AND SIGNATURE:

DATE: 11/15/2015
DRAWN BY: Author
CHECKED BY: Checker

SHEET TITLE:
STRUCTURAL PLANS

SHEET NUMBER:

FO-100.00

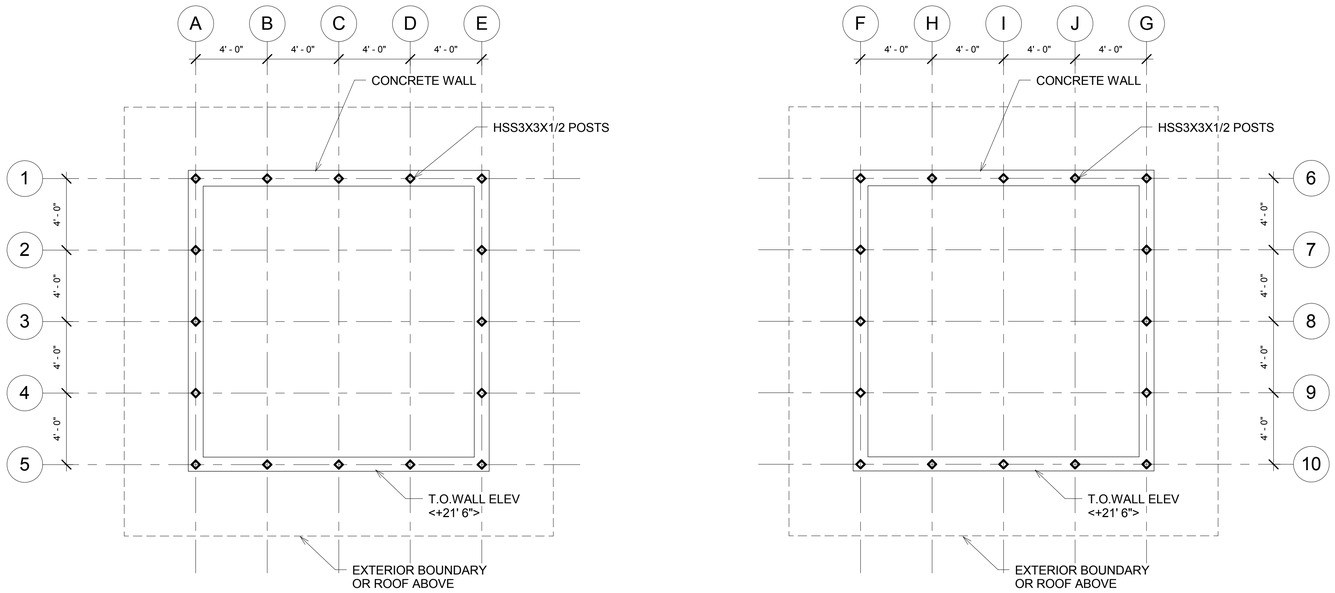

1 TOP OF CONCRETE WALLS

1/4" = 1'-0"

SHEET NOTES:

1. FOR ADDITIONAL INFORMATION REFER TO THE FOLLOWING DRAWINGS:

DRAWING LISTS, GENERAL NOTES, AND LOADING DIAGRAMS	S-0 SERIES DRAWINGS
TYPICAL FOUNDATION DETAILS	F0 SERIES DRAWINGS
STRUCTURAL PLANS	S-1 SERIES DRAWINGS
BUILDING SECTIONS	S-2 SERIES DRAWINGS

2. <XX'-XX"> INDICATES ELEVATION PER NAVD DATUM

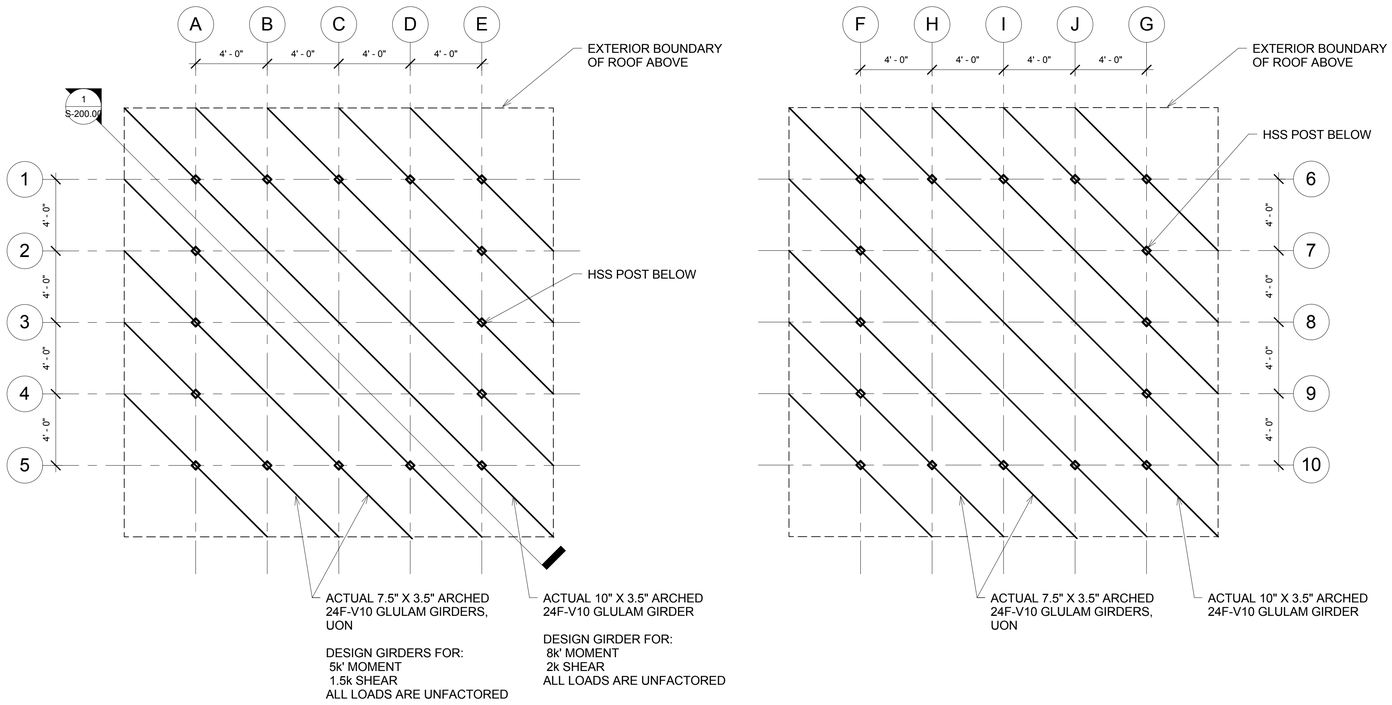

2 LOWER TIER ROOF FRAMING

1/4" = 1'-0"

hMa
hanrahan Meyers architect,llp

ARCHITECT:
HANRAHAN MEYERS ARCHITECTS, LLP
6 MAIDEN LANE SUITE 510
NEW YORK, NY 10038
T: (212) 989-6026 F: (917) 591-9825

Cosentini

MEP ENGINEERS:
Cosentini Associates
Two Pennsylvania Plaza - Third Floor
NEW YORK, NY 10121
T: (212) 615-3760 F: (212) 615-3600

Thornton Tomasetti

STRUCTURAL ENGINEERS:
Thornton Tomasetti
51 Madison Avenue
NEW YORK, NY 10010
T: (917) 661-7800 F: (917) 661-7801

EK|A PLLC

LANDSCAPE ARCHITECTS:
Elizabeth Kennedy Landscape Architect, PLLC
Brooklyn Navy Yard Building 275 Room 202
63 Flushing Avenue Unit 264
BROOKLYN, NY 11205
T: (718) 569-8837 F: (718) 709-5885

PROJECT:

Kowsky Plaza
Repair

401 South End Avenue
New York, NY 10280

PROPERTY INFORMATION:

NOTES:

Rev No.	Description	Date
1	COORDINATION SET	08.21.2015
2	BID SET	08.31.2015

DOB STAMPS AND SIGNATURE:

SEAL AND SIGNATURE:

DATE: 11/15/2015

DRAWN BY: Author

CHECKED BY: Checker

SHEET TITLE:

STRUCTURAL
PLANS II

SHEET NUMBER:

S-100.00

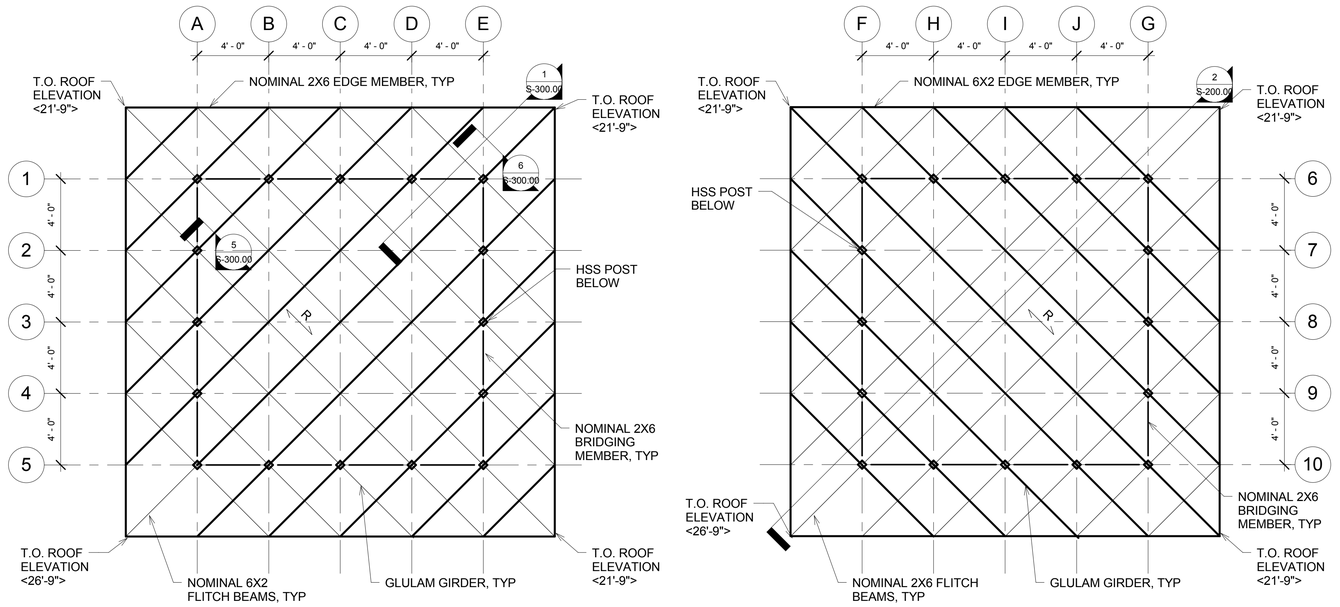

1 UPPER TIER ROOF FRAMING

1/4" = 1'-0"

SHEET NOTES:

1. TOP OF BEAM AS NOTED
2. <XX'-XX"> INDICATES ELEVATION PER NAVD DATUM
3. FOR ADDITIONAL INFORMATION REFER TO THE FOLLOWING DRAWINGS:

DRAWING LISTS, GENERAL NOTES, AND LOADING DIAGRAMS	S-0 SERIES DRAWINGS
TYPICAL FOUNDATION DETAILS	F0 SERIES DRAWINGS
STRUCTURAL PLANS	S-1 SERIES DRAWINGS
BUILDING SECTIONS	S-2 SERIES DRAWINGS

4. NOTATIONS:

R INDICATES TONGUE IN GROOVE ROOFING

hMa
hanrahan Meyers architect,llp

ARCHITECT:
HANRAHAN MEYERS ARCHITECTS, LLP
6 MAIDEN LANE SUITE 510
NEW YORK, NY 10038
T: (212) 989-6026 F: (917) 591-9825

Cosentini

MEP ENGINEERS:
Cosentini Associates
Two Pennsylvania Plaza - Third Floor
NEW YORK, NY 10121
T: (212) 615-3760 F: (212) 615-3600

Thornton Tomasetti

STRUCTURAL ENGINEERS:
Thornton Tomasetti
51 Madison Avenue
NEW YORK, NY 10010
T: (917) 661-7800 F: (917) 661-7801

EK|A PLLC

LANDSCAPE ARCHITECTS:
Elizabeth Kennedy Landscape Architect, PLLC
Brooklyn Navy Yard Building 275 Room 202
63 Flushing Avenue Unit 264
BROOKLYN, NY 11205
T: (718) 569-8837 F: (718) 709-5885

PROJECT:

Kowsky Plaza Repair

401 South End Avenue
New York, NY 10280

PROPERTY INFORMATION:

NOTES:

Rev No.	Description	Date
1	COORDINATION SET	08.21.2015
2	BID SET	08.31.2015

DOB STAMPS AND SIGNATURE:

SEAL AND SIGNATURE:

DATE: 11/15/2015

DRAWN BY: Author

CHECKED BY: Checker

SHEET TITLE:

FULL ROOF PLAN

SHEET NUMBER:

S-101.00

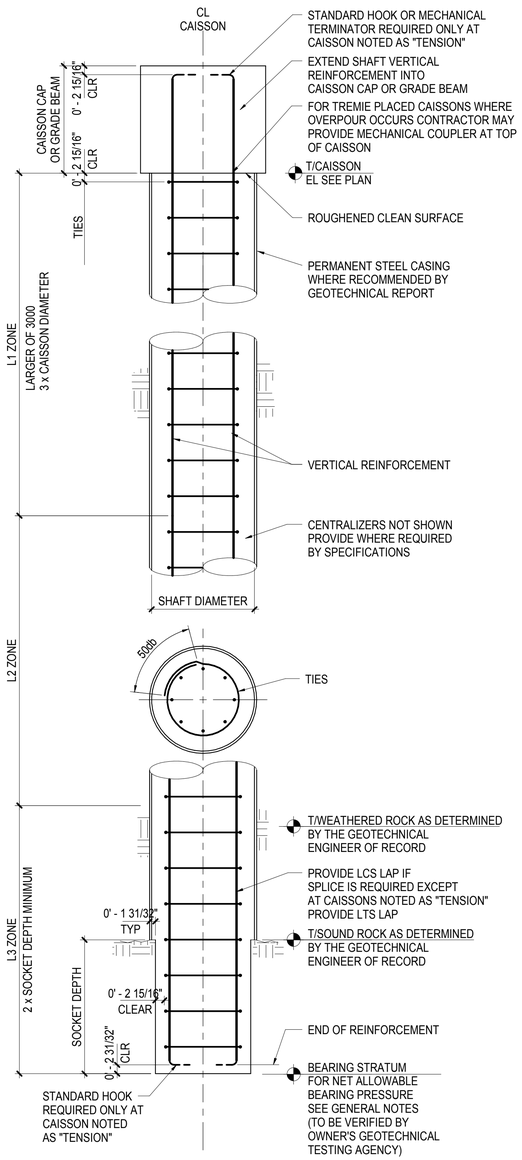

NOTES:

1. DESIGN, INSTALLATION, QUALITY ASSURANCE AND CONTROL OF CAISSON PILES TO BE RESPONSIBILITY OF CONTRACTOR. DESIGN OF CAISSON PILES SHALL SATISFY BOTH STRUCTURAL AND GEOTECHNICAL REQUIREMENTS. SIGNED AND SEALED CALCULATIONS MUST BE SUBMITTED TO EOR FOR REVIEW PRIOR TO CONSTRUCTION.
2. OWNER'S GEOTECHNICAL TESTING AGENCY SHALL VERIFY BEARING STRATA AT CAISSON VIA VIDEO INSPECTION

1 TYPICAL SOCKETED CAISSON IN CASED SHAFT

NOT TO SCALE

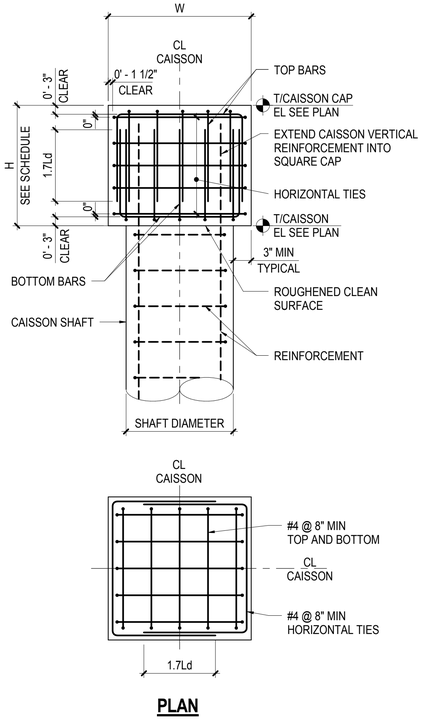

PLAN

2 SQUARE CAISSON CAP

NOT TO SCALE

SOCKETED CAISSON SCHEDULE

f'c = SEE GENERAL NOTES

MARK	SIZE			REINFORCEMENT L1 ZONE		REINFORCEMENT L2 ZONE		REINFORCEMENT L3 ZONE		REMARKS
	SHAFT DIAMETER	PERMANENT CASING THICKNESS	SOCKET DEPTH	VERTICAL BARS	TIES	VERTICAL BARS	TIES	VERTICAL BARS	TIES	

3 SOCKETED CAISSON SCHEDULE

NOT TO SCALE

CAISSON CAP SCHEDULE

f'c = SEE GENERAL NOTES

MARK	SIZE		REINFORCEMENT			REMARKS
	W	H	BOTTOM BARS	TOP BARS	HORIZONTAL TIES	

4 CAISSON CAP SCHEDULE

NOT TO SCALE

hMa
hanrahan Meyers architect,llp

ARCHITECT:
HANRAHAN MEYERS ARCHITECTS, LLP
6 MAIDEN LANE SUITE 510
NEW YORK, NY 10038
T: (212) 989-6026 F: (917) 591-9825

Cosentini

MEP ENGINEERS:
Cosentini Associates
Two Pennsylvania Plaza - Third Floor
NEW YORK, NY 10121
T: (212) 615-3760 F: (212) 615-3600

Thornton Tomasetti

STRUCTURAL ENGINEERS:
Thornton Tomasetti
51 Madison Avenue
NEW YORK, NY 10010
T: (917) 661-7800 F: (917) 661-7801

EK|A PLLC

LANDSCAPE ARCHITECTS:
Elizabeth Kennedy Landscape Architect, PLLC
Brooklyn Navy Yard Building 275 Room 202
63 Flushing Avenue Unit 264
BROOKLYN, NY 11205
T: (718) 569-8837 F: (718) 709-5885

PROJECT:

Kowsky Plaza Repair

401 South End Avenue
New York, NY 10280

PROPERTY INFORMATION:

NOTES:

Rev No.	Description	Date
1	COORDINATION SET	08.21.2015
2	BID SET	08.31.2015

DOB STAMPS AND SIGNATURE:

SEAL AND SIGNATURE:

DATE: 11/15/2015

DRAWN BY: Author

CHECKED BY: Checker

SHEET TITLE:

TYPICAL CAISSON DETAILS AND SCHEDULE

SHEET NUMBER:

FO-200.00

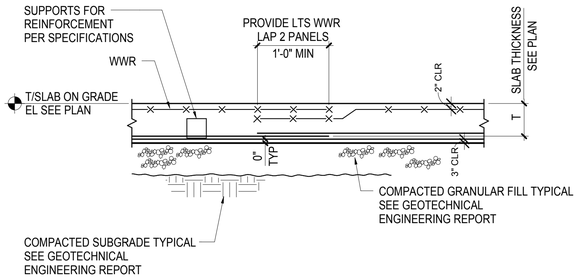

SLAB ON GRADE

1 TYPICAL SLAB ON GRADE DETAILS

NOT TO SCALE

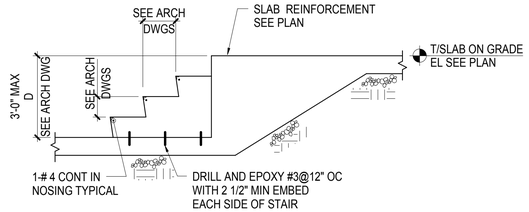

D UP TO 3'-0"

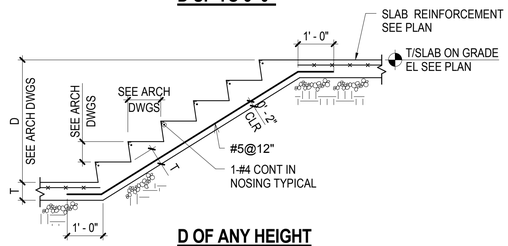

D OF ANY HEIGHT

NOTE:

1. COORDINATE LOCATIONS WITH ARCHITECTURAL DRAWINGS

2 TYPICAL EXTERIOR STAIR DETAIL AT SLAB ON GRADE

NOT TO SCALE

3 SITE GRAVITY RETAINING WALL AT STAIR

1/2" = 1'-0"

4 SITE WALL AT STAIR

1/2" = 1'-0"

hMa
hanrahan Meyers architect,llp

ARCHITECT:
HANRAHAN MEYERS ARCHITECTS, LLP
6 MAIDEN LANE SUITE 510
NEW YORK, NY 10038
T: (212) 989-6026 F: (917) 591-9825

Cosentini

MEP ENGINEERS:
Cosentini Associates
Two Pennsylvania Plaza - Third Floor
NEW YORK, NY 10121
T: (212) 615-3760 F: (212) 615-3600

Thornton Tomasetti

STRUCTURAL ENGINEERS:
Thornton Tomasetti
51 Madison Avenue
NEW YORK, NY 10010
T: (917) 661-7800 F: (917) 661-7801

EK|A PLLC

LANDSCAPE ARCHITECTS:
Elizabeth Kennedy Landscape Architect, PLLC
Brooklyn Navy Yard Building 275 Room 202
63 Flushing Avenue Unit 264
BROOKLYN, NY 11205
T: (718) 569-8837 F: (718) 709-5885

PROJECT:

Kowsky Plaza
Repair

401 South End Avenue
New York, NY 10280

PROPERTY INFORMATION:

NOTES:

Rev No.	Description	Date
1	COORDINATION SET	08.21.2015
2	BID SET	08.31.2015

DOB STAMPS AND SIGNATURE:

SEAL AND SIGNATURE:

DATE: 11/15/2015

DRAWN BY: Author

CHECKED BY: Checker

SHEET TITLE:

TYPICAL SITE
DETAILS

SHEET NUMBER:

FO-300.00

NOTES:

1. REFER TO PLANS FOR ADDITIONAL BARS AROUND OPENINGS
2. SEE STRUCTURAL DRAWINGS FOR QUANTITY AND LOCATIONS OF OPENINGS. CONTRACTOR SHALL VERIFY SIZE AND LOCATION OF ALL OPENINGS WITH MEP DRAWINGS NOTIFY STRUCTURAL ENGINEER IN WRITING OF ANY DISCREPANCIES FOR REVIEW AND APPROVAL
3. FOR TWO-WAY SLAB SEE TYPICAL TWO-WAY SLAB OPENING LIMITATIONS. FOR OPENING NOT MEETING LIMITATIONS OR GREATER THAN 3 FEET, SUBMIT OPENINGS TO SER FOR APPROVAL
4. FOR ONE-WAY SLABS WHERE THE OPENING DIMENSION PERPENDICULAR TO THE DIRECTION OF THE SPAN IS GREATER THAN 2 FEET, SUBMIT OPENINGS TO SER FOR APPROVAL
5. WHERE ADJACENT OPENINGS ARE NOT SEPARATED BY 2X THE LARGEST OPENING DIMENSION OR WOULD INTERRUPT THE ADDITIONAL REINFORCEMENT FROM THE ADJACENT OPENING, SUBMIT OPENINGS TO SER FOR APPROVAL

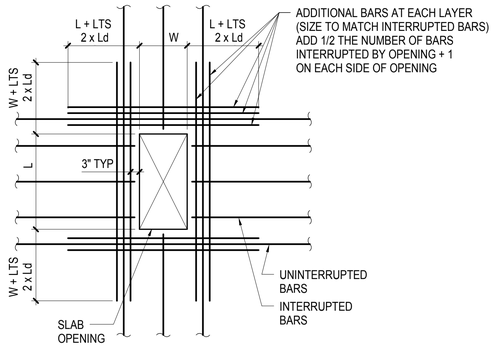

ADDITIONAL BARS WHERE BARS ARE INTERRUPTED

NOTES: ADDITIONAL BARS

1. PROVIDE ADDITIONAL BARS ON EACH SIDE OF OPENING FOR TOP AND BOTTOM BARS THAT ARE INTERRUPTED BY OPENINGS DISTRIBUTE REPLACEMENT BARS EQUALLY TO BOTH SIDES OF OPENING AT 3" SPACING
2. PROVIDE A MINIMUM OF 2 BARS EACH SIDE OF OPENING TOP AND BOTTOM WHERE NO TOP BARS ARE PRESENT, PROVIDE ADDITIONAL TOP BARS SHOWN ABOVE
3. AT CLUSTERED OPENINGS, PROVIDE THESE ADDITIONAL BARS AROUND THE CLUSTER PLUS THE ADDITIONAL BARS SHOWN IN THE CLUSTERED OPENING DETAIL

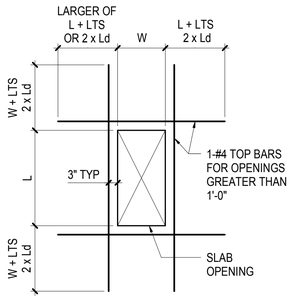

ADDITIONAL TOP BARS WHERE NO TOP BARS ARE PRESENT

ADDITIONAL TOP BARS	
OPENING SIZE (LARGER DIMENSION OF OPENING)	TOP BARS ALL SIDE
0 - 12"	NONE
12" - 36"	1 - #4

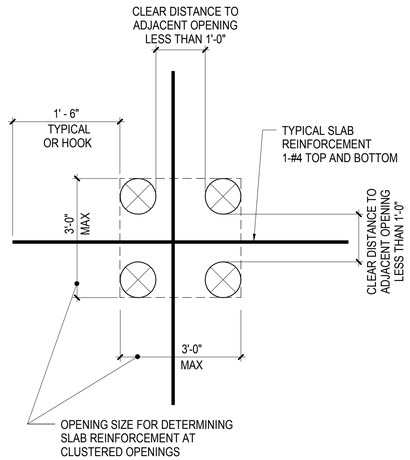

TYPE 1

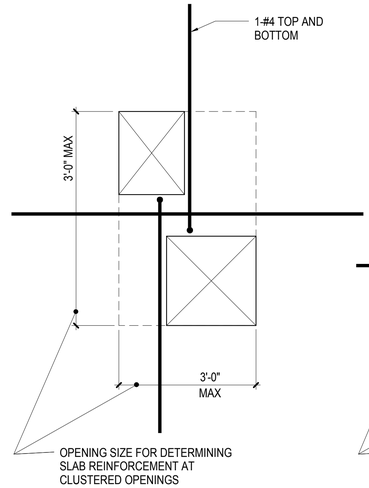

TYPE 2

SEE TYPE 1 FOR INFORMATION NOT SHOWN

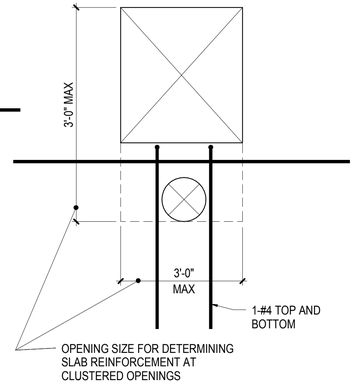

TYPE 3

SEE TYPE 1 FOR INFORMATION NOT SHOWN

CLUSTERED OPENING ADDITIONAL REINFORCEMENT

NOTES: CLUSTERED OPENINGS

1. THE REINFORCEMENT REQUIREMENTS AT CLUSTERED OPENING ARE IN ADDITION TO THE TYPICAL SLAB OPENING DETAIL REQUIREMENTS AROUND THE ENTIRE CLUSTER
2. FOR ONE-WAY SLABS, WHEN CLUSTERED OPENING IS GREATER THAN 2 FEET, SUBMIT TO SER FOR APPROVAL.
3. FOR TWO-WAY SLABS, WHEN CLUSTERED OPENING DOES NOT MEET TWO-WAY SLAB OPENING LIMITATIONS OR IS GREATER THAN 3 FEET, SUBMIT TO SER FOR APPROVAL

1 TYPICAL SLAB OPENING DETAILS

NOT TO SCALE

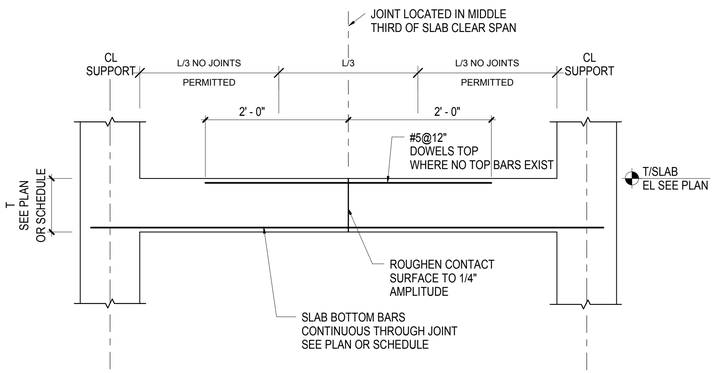

NOTES:

1. CONTRACTOR SHALL SUBMIT CONSTRUCTION JOINT LAYOUT PLAN FOR SER APPROVAL
2. FOR SLAB REINFORCEMENT NOT SHOWN, SEE PLAN OR SCHEDULE

2 TYPICAL SLAB CONSTRUCTION JOINT

NOT TO SCALE

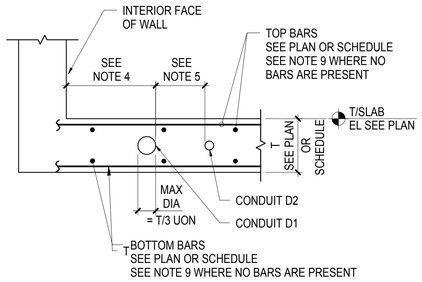

NOTES:

1. PLACE CONDUITS BETWEEN TOP AND BOTTOM LAYER OF REINFORCEMENT CENTERED WITHIN SLAB
2. CROSSOVER OF CONDUITS AND/OR PIPES IS NOT PERMITTED WITHOUT PRIOR WRITTEN APPROVAL BY SER
3. CONDUITS TO BE PLASTIC OR STEEL. USE OF ALUMINUM CONDUITS IS NOT PERMITTED
4. PLACE CONDUITS THE LARGEST OF THE FOLLOWING CLEAR FROM FACE OF WALL:
   a. WALL WIDTH
   b. 2 x SLAB THICKNESS, T
   c. 1'-0"
5. MAINTAIN A CLEAR SPACING BETWEEN CONDUITS OF THREE TIMES THE LARGER OUTER DIAMETER OF D1 AND D2, BUT NOT LESS THAN 6" MIN.
6. NO MORE THAN THREE (3) CONDUITS PER SIX (6) FT WIDTH OF SLAB ARE PERMITTED WITHOUT PRIOR WRITTEN APPROVAL BY SER
7. WHERE LARGE NUMBERS OF CONDUIT ENTER THE SLAB AT ONE LOCATION:
   a. SUBMIT LAYOUT FOR APPROVAL BY SER
   b. FAN OUT CONDUITS IMMEDIATELY
   c. PROVIDE ADDITIONAL TOP & BOTTOM REINFORCEMENT AS DIRECTED BY SER UNTIL NOTES 5 AND 6 SPACING REQUIREMENTS ARE MET
8. NO CONDUITS ARE PERMITTED WITHIN A DISTANCE "T" CLEAR FROM SLAB EDGE, SLAB DEPRESSION, OR DROP PANEL WITHOUT WRITTEN APPROVAL BY SER
9. WHERE NO BARS ARE PRESENT AT ONE OR MORE FACES OF SLAB, PROVIDE THE FOLLOWING REINFORCEMENT PERPENDICULAR TO THE CONDUIT(S) 3'-0" LONG OR EXTENDING 1'-0" PAST EACH SIDE OF CONDUIT(S), WHICHEVER IS LARGER:
   T < 8", #4@12" OC
   8" < T < 1'-0", #5@12" OC
   1'-0" < T < 1'-6", #6@12" OC
10. ANY DEVIATIONS FROM THE ABOVE STATED CONDITIONS REQUIRE WRITTEN APPROVAL BY SER

3 TYPICAL CONDUITS IN SLAB

NOT TO SCALE

hMa
hanrahan Meyers architect,llp

ARCHITECT:
HANRAHAN MEYERS ARCHITECTS, LLP
6 MAIDEN LANE SUITE 510
NEW YORK, NY 10038
T: (212) 989-6026 F: (917) 591-9825

Cosentini

MEP ENGINEERS:
Cosentini Associates
Two Pennsylvania Plaza - Third Floor
NEW YORK, NY 10121
T: (212) 615-3760 F: (212) 615-3600

Thornton Tomasetti

STRUCTURAL ENGINEERS:
Thornton Tomasetti
51 Madison Avenue
NEW YORK, NY 10010
T: (917) 661-7800 F: (917) 661-7801

EK|A PLLC

LANDSCAPE ARCHITECTS:
Elizabeth Kennedy Landscape Architect, PLLC
Brooklyn Navy Yard Building 275 Room 202
63 Flushing Avenue Unit 264
BROOKLYN, NY 11205
T: (718) 569-8837 F: (718) 709-5885

PROJECT:

Kowsky Plaza
Repair

401 South End Avenue
New York, NY 10280

PROPERTY INFORMATION:

NOTES:

Rev No.	Description	Date
1	COORDINATION SET	08.21.2015
2	BID SET	08.31.2015

DOB STAMPS AND SIGNATURE:

SEAL AND SIGNATURE:

DATE: 11/15/2015
DRAWN BY: Author
CHECKED BY: Checker

SHEET TITLE:

TYPICAL
CONCRETE
SLAB
DETAILS

SHEET NUMBER:

FO-301.00

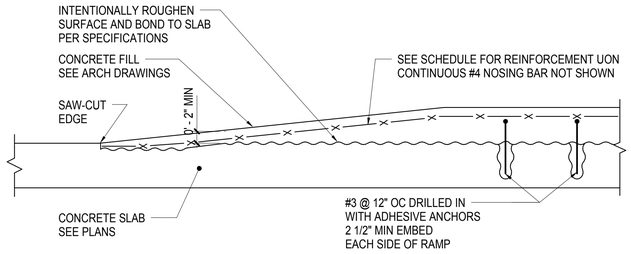

DETAIL AT RAMP

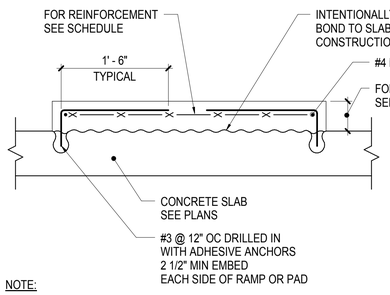

THICKNESS	REINFORCEMENT
≤ 3"	WWR 6x6 - W2.9xW2.9
≤ 4"	WWR 6x6 - W4.0xW4.0
≤ 6"	#3 @ 10" TOP EACH WAY
≤ 12"	#4 @ 12" TOP & BOTTOM EACH WAY

NOTE:

1. THIS DETAIL IS NOT APPLICABLE TO GENERAL RAISED SLAB AREA HIGHER THAN 4" OTHER THAN MECHANICAL PADS AND HOUSEKEEPING PADS

SECTION AT RAMP OR PAD

1 TYPICAL DETAIL OF CONCRETE FILL HOUSEKEEPING PAD / MECHANICAL PAD / RAMP

NOT TO SCALE

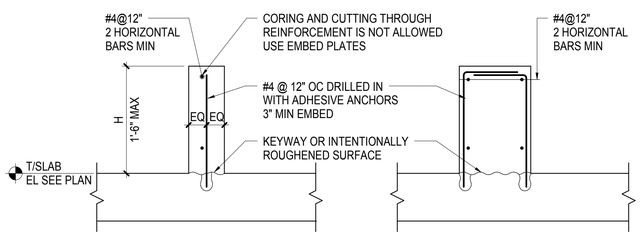

CURB WIDTH - 4" MIN TO 7" MAX **CURB WIDTH OVER 7"**

NOTES:

1. FOR SIZE AND LOCATION SEE ARCH, MEP, OR STRUCTURAL DRAWINGS
2. ROUGHEN SURFACE OF SLAB TO 1/4" AMPLITUDE CLEAN THOROUGHLY AND APPLY BONDING AGENT IMMEDIATELY BEFORE CASTING CURB
3. THIS DETAIL IS APPLICABLE AT CURBS FOR NON-STRUCTURAL ELEMENTS SUCH AS SKYLIGHTS, INTERIOR PARTITIONS AND INTERIOR RAILINGS
4. SEE ARCH DRAWINGS FOR EMBEDDED PLATES AND BLOCKOUTS REPLACE REINFORCEMENT INTERRUPTED BY BLOCKOUTS

2 TYPICAL CURB DETAILS (NOT SUBJECT TO LATERAL LOADS)

NOT TO SCALE

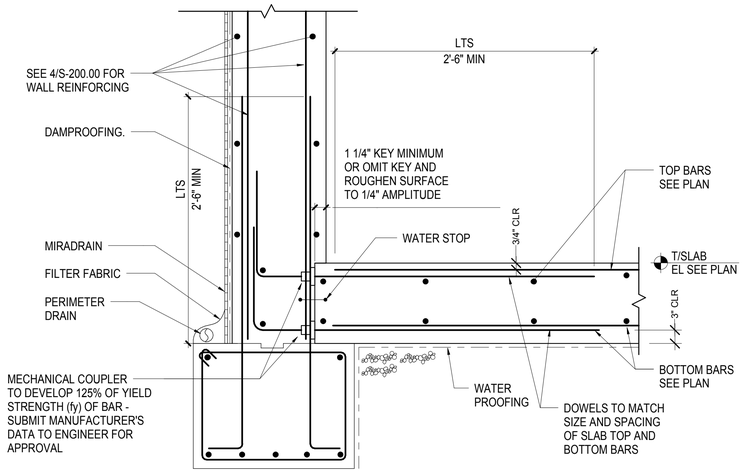

3 TYPICAL STRUCTURED SLAB ON GRADE

1 1/2" = 1'-0"

hMa
hanrahan Meyers architect,llp

ARCHITECT:
HANRAHAN MEYERS ARCHITECTS, LLP
6 MAIDEN LANE SUITE 510
NEW YORK, NY 10038
T: (212) 989-6026 F: (917) 591-9825

Cosentini

MEP ENGINEERS:
Cosentini Associates
Two Pennsylvania Plaza - Third Floor
NEW YORK, NY 10121
T: (212) 615-3760 F: (212) 615-3600

Thornton Tomasetti

STRUCTURAL ENGINEERS:
Thornton Tomasetti
51 Madison Avenue
NEW YORK, NY 10010
T: (917) 661-7800 F: (917) 661-7801

EK|A PLLC

LANDSCAPE ARCHITECTS:
Elizabeth Kennedy Landscape Architect, PLLC
Brooklyn Navy Yard Building 275 Room 202
63 Flushing Avenue Unit 264
BROOKLYN, NY 11205
T: (718) 569-8837 F: (718) 709-5885

PROJECT:

Kowsky Plaza Repair

401 South End Avenue
New York, NY 10280

PROPERTY INFORMATION:

NOTES:

Rev No.	Description	Date
1	COORDINATION SET	08.21.2015
2	BID SET	08.31.2015

DOB STAMPS AND SIGNATURE:

SEAL AND SIGNATURE:

DATE: 11/15/2015

DRAWN BY: Author

CHECKED BY: Checker

SHEET TITLE:

TYPICAL CONCRETE SLAB DETAILS

SHEET NUMBER:

FO-302.00

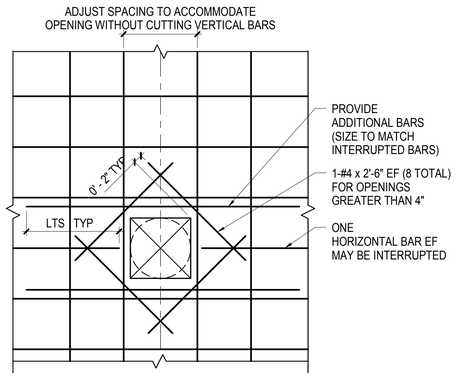

OPENING LESS THAN 10"

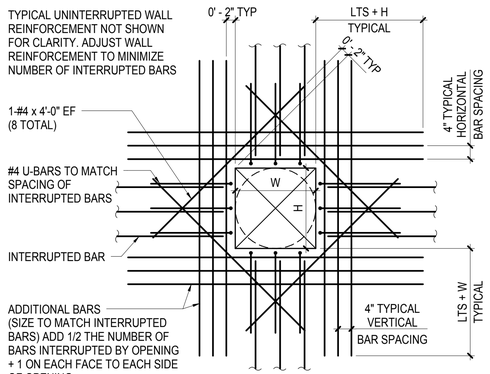

OPENING 10" TO 30"

NOTES:

1. SHEARWALL PENETRATIONS ARE SHOWN ON THE SHEARWALL ELEVATIONS ADDITIONAL PENETRATIONS ARE NOT ALLOWED UNLESS APPROVED IN WRITING BY THE SER
2. FOR OPENINGS NOT SHOWN ON STRUCTURAL DRAWINGS, CONTRACTOR TO SUBMIT LOCATIONS AND SPACING TO SER FOR WRITTEN APPROVAL

4 TYPICAL WALL OPENING DETAILS

NOT TO SCALE

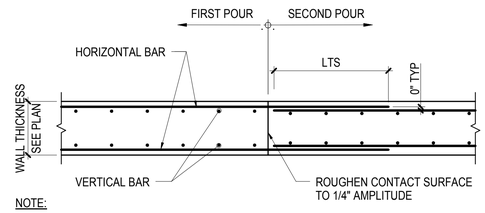

NOTE:

1. VERTICAL CONSTRUCTION JOINTS AS INDICATED ON PLAN OR GENERAL NOTES ADDITIONAL JOINTS ARE NOT ALLOWED UNLESS APPROVED IN WRITING BY SER

2 TYPICAL SHEARWALL CONSTRUCTION JOINT

NOT TO SCALE

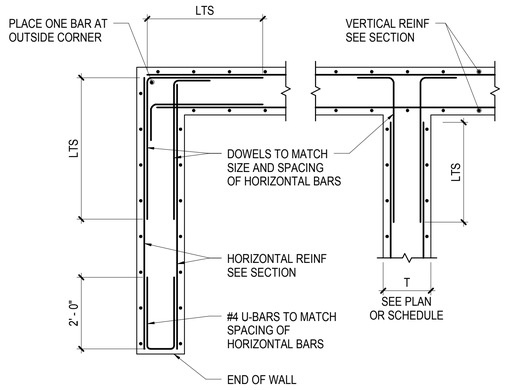

3 TYPICAL WALL DETAIL - PLAN

NOT TO SCALE

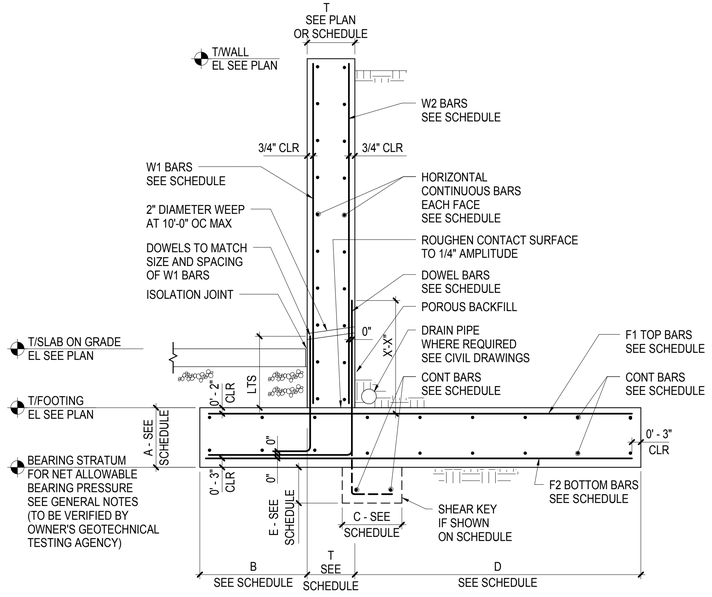

NOTES:

1. WALL DESIGNED FOR DRAINED CONDITION. SEE MECHANICAL AND/OR CIVIL DRAWINGS
2. DO NOT BACK FILL UNTIL WALL COMPRESSIVE STRENGTH f'c REACHES 28 DAY DESIGN STRENGTH

1 TYPICAL SITE RETAINING WALL SECTION

NOT TO SCALE

hMa
hanrahan Meyers architect,llp

ARCHITECT:
HANRAHAN MEYERS ARCHITECTS, LLP
6 MAIDEN LANE SUITE 510
NEW YORK, NY 10038
T: (212) 989-6026 F: (917) 591-9825

Cosentini

MEP ENGINEERS:
Cosentini Associates
Two Pennsylvania Plaza - Third Floor
NEW YORK, NY 10121
T: (212) 615-3760 F: (212) 615-3600

Thornton Tomasetti

STRUCTURAL ENGINEERS:
Thornton Tomasetti
51 Madison Avenue
NEW YORK, NY 10010
T: (917) 661-7800 F: (917) 661-7801

EK|A PLLC

LANDSCAPE ARCHITECTS:
Elizabeth Kennedy Landscape Architect, PLLC
Brooklyn Navy Yard Building 275 Room 202
63 Flushing Avenue Unit 264
BROOKLYN, NY 11205
T: (718) 569-8837 F: (718) 709-5885

PROJECT:

Kowsky Plaza
Repair

401 South End Avenue
New York, NY 10280

PROPERTY INFORMATION:

NOTES:

Rev No.	Description	Date
1	COORDINATION SET	08.21.2015
2	BID SET	08.31.2015

DOB STAMPS AND SIGNATURE:

SEAL AND SIGNATURE:

DATE: 11/15/2015

DRAWN BY: Author

CHECKED BY: Checker

SHEET TITLE:

TYPICAL
WALL
DETAILS

SHEET NUMBER:

FO-400.00

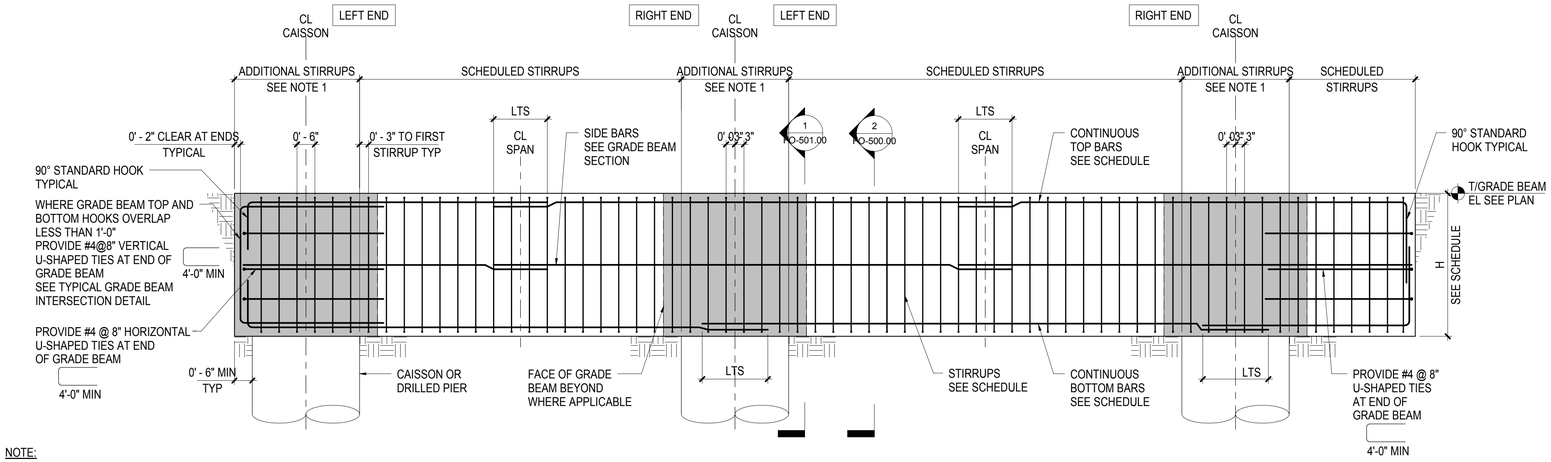

NOTE:

1. PROVIDE #4@6" TYPE 2A STIRRUPS OVER CAISSON SUPPORT TYPICAL

1 TYPICAL GRADE BEAM ELEVATION

NOT TO SCALE

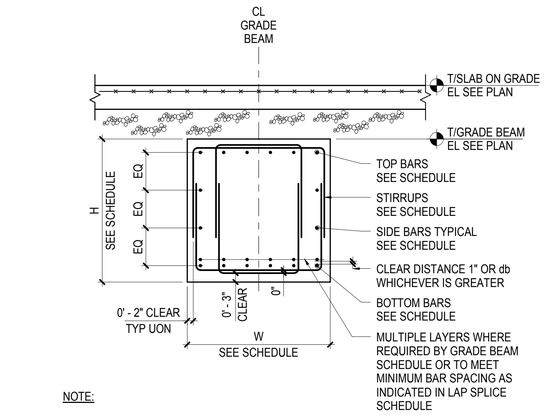

NOTE:

1. IF H IS GREATER THAN 24" PROVIDE SIDE BARS #5@10" MIN UON IN SCHEDULE

2 GRADE BEAM SECTION - TYPICAL

NOT TO SCALE

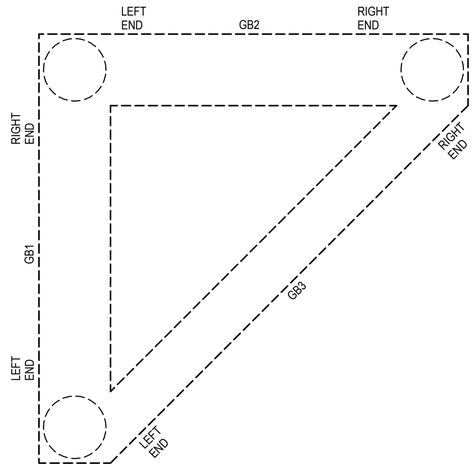

3 GRADE BEAM ORIENTATION KEY PLAN

NOT TO SCALE

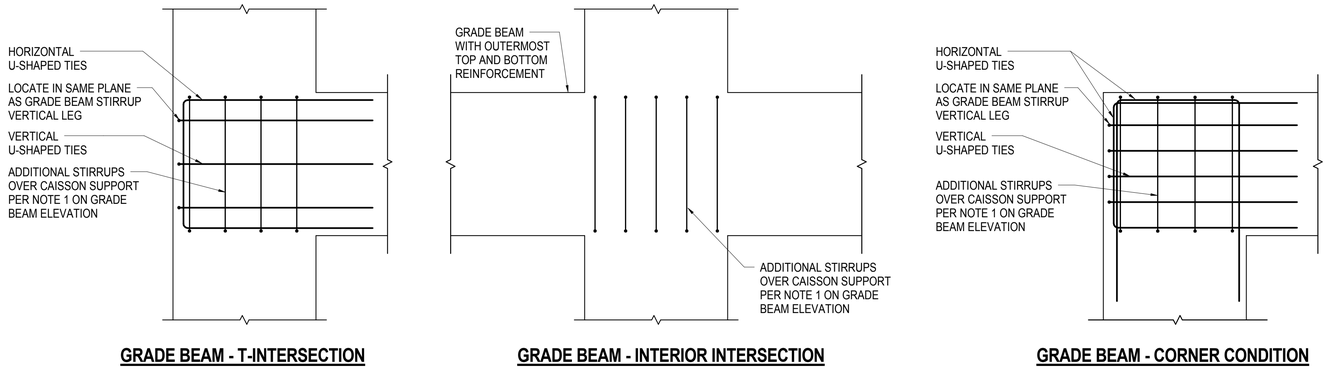

GRADE BEAM - T-INTERSECTION | GRADE BEAM - INTERIOR INTERSECTION | GRADE BEAM - CORNER CONDITION

NOTES:

1. GRADE BEAM LONGITUDINAL REINFORCEMENT AND STIRRUPS NOT SHOWN FOR CLARITY
2. FOR U-SHAPED TIES SEE TYPICAL GRADE BEAM ELEVATION

4 TYPICAL GRADE BEAM INTERSECTION PLAN DETAILS

NOT TO SCALE

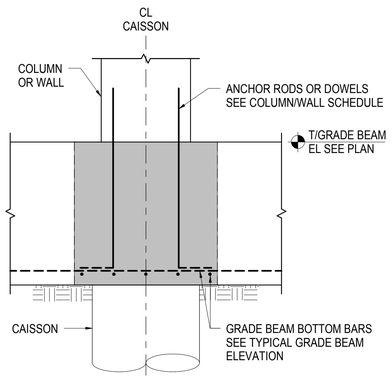

TYPICAL GRADE BEAM DETAIL AT COLUMN / WALL INTERSECTION

5

NOT TO SCALE

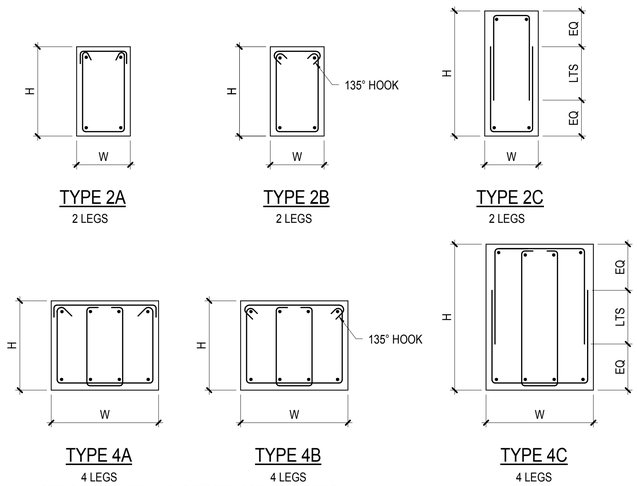

6 GRADE BEAM STIRRUP TYPES

NOT TO SCALE

hMa
hanrahan Meyers architect,llp

ARCHITECT:
HANRAHAN MEYERS ARCHITECTS, LLP
6 MAIDEN LANE SUITE 510
NEW YORK, NY 10038
T: (212) 989-6026 F: (917) 591-9825

Cosentini

MEP ENGINEERS:
Cosentini Associates
Two Pennsylvania Plaza - Third Floor
NEW YORK, NY 10121
T: (212) 615-3760 F: (212) 615-3600

Thornton Tomasetti

STRUCTURAL ENGINEERS:
Thornton Tomasetti
51 Madison Avenue
NEW YORK, NY 10010
T: (917) 661-7800 F: (917) 661-7801

EK|A PLLC

LANDSCAPE ARCHITECTS:
Elizabeth Kennedy Landscape Architect, PLLC
Brooklyn Navy Yard Building 275 Room 202
63 Flushing Avenue Unit 264
BROOKLYN, NY 11205
T: (718) 569-8837 F: (718) 709-5885

PROJECT:

Kowsky Plaza Repair

401 South End Avenue
New York, NY 10280

PROPERTY INFORMATION:

NOTES:

Rev No.	Description	Date
1	COORDINATION SET	08.21.2015
2	BID SET	08.31.2015

DOB STAMPS AND SIGNATURE:

SEAL AND SIGNATURE:

DATE: 11/15/2015

DRAWN BY: Author

CHECKED BY: Checker

SHEET TITLE:

TYPICAL GRADE BEAM DETAILS

SHEET NUMBER:

FO-500.00

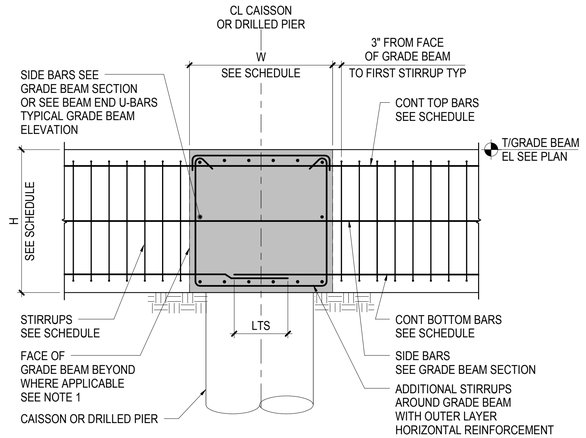

NOTES:

1. CONSTRUCTION JOINTS SHALL NOT BE PLACED AT FACE OF GRADE BEAMS WITHOUT WRITTEN APPROVAL FROM SER

2. SLAB ON GRADE NOT SHOWN FOR CLARITY

1 TYPICAL GRADE BEAM INTERIOR INTERSECTION DETAIL

NOT TO SCALE

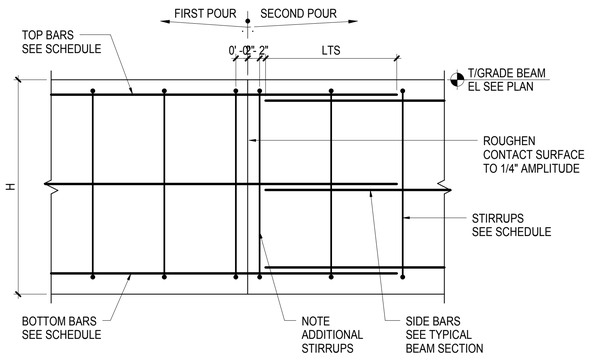

NOTES:

1. CONTRACTOR SHALL SUBMIT CONCRETE CONSTRUCTION JOINT LAYOUT FOR REVIEW AND APPROVAL (REFER TO GENERAL NOTES AND SPECIFICATIONS) PRIOR TO REINFORCEMENT SUBMITTAL

2. HORIZONTAL CONSTRUCTION JOINTS ARE NOT PERMITTED WITHOUT WRITTEN APPROVAL FROM SER

2 TYPICAL GRADE BEAM CONSTRUCTION JOINT - ELEVATION

NOT TO SCALE

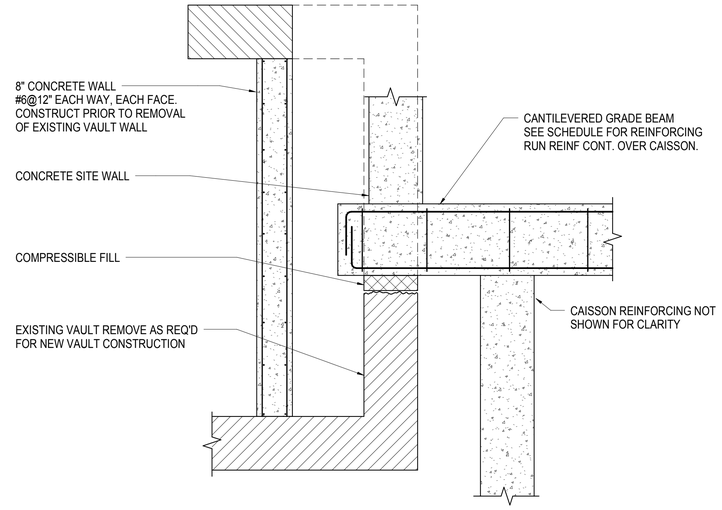

3 SECTION AT EXISTING VAULT

1 1/2" = 1'-0"

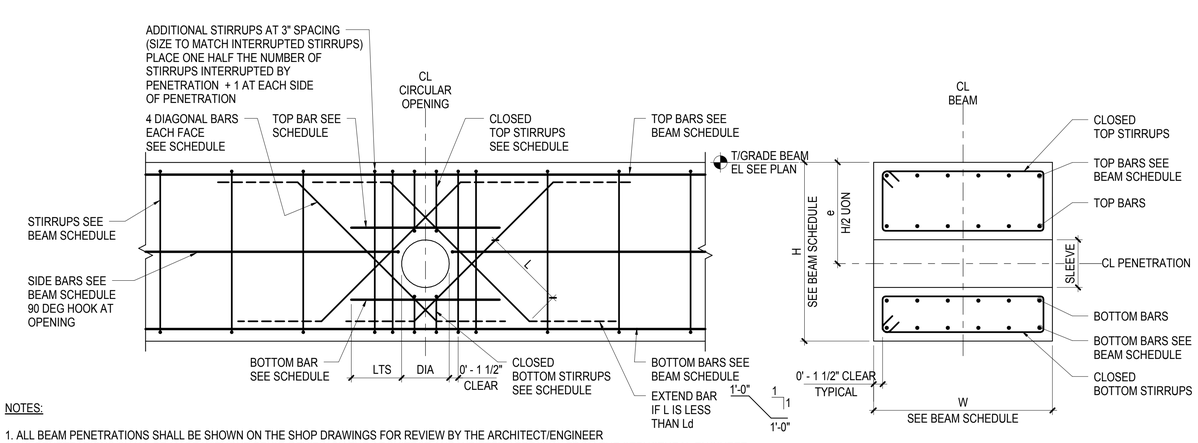

NOTES:

1. ALL BEAM PENETRATIONS SHALL BE SHOWN ON THE SHOP DRAWINGS FOR REVIEW BY THE ARCHITECT/ENGINEER
   NO PENETRATIONS SHALL BE MADE WITHOUT PRIOR REVIEW BY THE ARCHITECT AND WRITTEN APPROVAL FROM THE STRUCTURAL ENGINEER

2. THESE DETAILS SHALL BE USED IN CONJUNCTION WITH CONCRETE BEAM PENETRATION SCHEDULE

3. THE MINIMUM CLEAR SPACE BETWEEN TWO ADJACENT PENETRATIONS SHALL BE GREATER OF THE LARGEST PENETRATION DIMENSION OR TWO TIMES THE BEAM DEPTH

4. THE MINIMUM CLEAR DIMENSION BETWEEN THE EDGE OF A PENETRATION AND THE FACE OF SUPPORT SHALL BE THE DEPTH OF THE BEAM

5. SEE STRUCTURAL DRAWINGS FOR PENETRATIONS. GENERAL CONTRACTOR SHALL VERIFY QUANTITY, SIZE, AND LOCATION OF ALL PENETRATIONS WITH MEP DRAWINGS. NOTIFY STRUCTURAL ENGINEER IN WRITING OF ANY DISCREPANCIES FOR REVIEW AND APPROVAL

6. NO ADDITIONAL REINFORCEMENT IS REQUIRED FOR OPENINGS WITH 4" DIAMETER OR SMALLER PROVIDED NO BEAM REINFORCEMENT IS INTERRUPTED AND MINIMUM CONCRETE COVER IS PROVIDED AROUND ALL BARS. IT IS ACCEPTABLE TO ADJUST BEAM REINFORCEMENT WITHIN MAXIMUM SPACING LIMITS FOR STIRRUPS OR SIDE BARS

4 TYPICAL GRADE BEAM SLEEVE - ELEVATION

NOT TO SCALE

hMa
hanrahan Meyers architect,llp

ARCHITECT:
HANRAHAN MEYERS ARCHITECTS, LLP
6 MAIDEN LANE SUITE 510
NEW YORK, NY 10038
T: (212) 989-6026 F: (917) 591-9825

Cosentini

MEP ENGINEERS:
Cosentini Associates
Two Pennsylvania Plaza - Third Floor
NEW YORK, NY 10121
T: (212) 615-3760 F: (212) 615-3600

Thornton Tomasetti

STRUCTURAL ENGINEERS:
Thornton Tomasetti
51 Madison Avenue
NEW YORK, NY 10010
T: (917) 661-7800 F: (917) 661-7801

EK|A PLLC

LANDSCAPE ARCHITECTS:
Elizabeth Kennedy Landscape Architect, PLLC
Brooklyn Navy Yard Building 275 Room 202
63 Flushing Avenue Unit 264
BROOKLYN, NY 11205
T: (718) 569-8837 F: (718) 709-5885

PROJECT:

Kowsky Plaza
Repair

401 South End Avenue
New York, NY 10280

PROPERTY INFORMATION:

NOTES:

Rev No.	Description	Date
1	COORDINATION SET	08.21.2015
2	BID SET	08.31.2015

DOB STAMPS AND SIGNATURE:

SEAL AND SIGNATURE:

DATE: 11/15/2015

DRAWN BY: Author

CHECKED BY: Checker

SHEET TITLE:

TYPICAL
GRADE BEAM
DETAILS

SHEET NUMBER:

FO-501.00

GRADE BEAM SCHEDULE

f'c = SEE GENERAL NOTES

GRADE BEAM MARK	SIZE		REINFORCEMENT							REMARKS
	W (IN)	H (IN)	LEFT END TOP BARS	RIGHT END TOP BARS	BOTTOM BARS	SIDE BARS EACH FACE SEE NOTE 3	STIRRUPS TYPE	STIRRUPS SIZE	STIRRUPS SPACING AT SUPPORT	
GB1	18	24	6-#6	6-#6	4-#5	2-#5	2B	#4	6"	
GB2	18	24	4-#4	4-#4	7-#6	2-#5	2B	#4	6"	

NOTES:

1. SEE PLAN FOR TOP OF GRADE BEAM ELEVATION
2. LEFT END AND RIGHT END OF BEAM ARE DEFINED ON BEAM ORIENTATION KEY PLAN
3. SEE TYPICAL GRADE BEAM SECTION DETAIL WHERE NO SIDE BARS ARE INDICATED

REINFORCEMENT LEGEND:

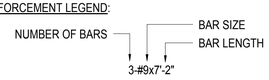

1 GRADE BEAM SCHEDULE

NOT TO SCALE

GRADE BEAM PENETRATION SCHEDULE

MARK	MAX SIZE		REINFORCEMENT				DIAGONAL BARS AT CIRCULAR PENETRATION	REMARKS
	DIAMETER (IN)	e (IN)	TOP BARS	BOTTOM BARS	TOP STIRRUPS	BOTTOM STIRRUPS		

2 GRADE BEAM PENETRATION SCHEDULE

NOT TO SCALE

hMa
hanrahan meyers architect,llp

ARCHITECT:
HANRAHAN MEYERS ARCHITECTS, LLP
6 MAIDEN LANE SUITE 510
NEW YORK, NY 10038
T: (212) 989-6026 F: (917) 591-9825

Cosentini

MEP ENGINEERS:
Cosentini Associates
Two Pennsylvania Plaza - Third Floor
NEW YORK, NY 10121
T: (212) 615-3760 F: (212) 615-3600

Thornton Tomasetti

STRUCTURAL ENGINEERS:
Thornton Tomasetti
51 Madison Avenue
NEW YORK, NY 10010
T: (917) 661-7800 F: (917) 661-7801

EK|A PLLC

LANDSCAPE ARCHITECTS:
Elizabeth Kennedy Landscape Architect, PLLC
Brooklyn Navy Yard Building 275 Room 202
63 Flushing Avenue Unit 264
BROOKLYN, NY 11205
T: (718) 569-8837 F: (718) 709-5885

PROJECT:

Kowsky Plaza Repair

401 South End Avenue
New York, NY 10280

PROPERTY INFORMATION:

NOTES:

Rev No.	Description	Date
1	COORDINATION SET	08.21.2015
2	BID SET	08.31.2015

DOB STAMPS AND SIGNATURE:

SEAL AND SIGNATURE:

DATE: 11/15/2015

DRAWN BY: Author

CHECKED BY: Checker

SHEET TITLE:

GRADE BEAM SCHEDULES

SHEET NUMBER:

FO-502.00

DEVELOPMENT LENGTH SCHEDULE (INCHES)

BAR SIZE	MIN BAR SPACING (INCHES) [MAX OF db+1" OR 2db]	TENSION		COMPRESSION
		Ld ON DWGS	Ldh ON DWGS	Ldc ON DWGS
		f'c (PSI)	f'c (PSI)	f'c (PSI)
		5000	5000	5000
#3	1.375	13	7	8
#4	1.500	17	9	9
#5	1.625	22	11	12
#6	1.750	26	13	14
#7	1.875	38	15	16
#8	2.000	43	17	18
#9	2.375	48	20	21
#10	2.625	54	22	23
#11	2.875	60	24	26

CAISSON REINFORCEMENT LAP SPLICE LENGTH SCHEDULE (INCHES)

BAR SIZE	MIN BAR SPACING (INCHES)	TENSION (LTS)	COMPRESSION (LCS)
		f'c = 5 KSI	
#5	2.125	28	19
#6	2.250	34	23
#7	2.375	49	27
#8	2.500	56	30
#9	2.875	63	34
#10	3.250	71	39
#11	3.625	78	43

GRADE BEAM/BEAM REINFORCEMENT LAP SPLICE LENGTH SCHEDULE (INCHES)

BAR SIZE	MIN BAR SPACING (INCHES)	TENSION (LTS)	
		f'c = 5 KSI	
		TOP BARS	OTHER
#4	1.500	29	23
#5	1.625	36	28
#6	1.750	44	34
#7	1.875	63	49
#8	2.000	72	56
#9	2.375	81	63
#10	2.625	92	71
#11	2.875	102	78

FOUNDATION WALL REINFORCEMENT - VERTICAL BARS LAP SPLICE LENGTH SCHEDULE (INCHES)

BAR SIZE	MIN BAR SPACING (INCHES)	TENSION (LTS)	COMPRESSION (LCS)
		f'c = 5 KSI	
#4	2.000	23	15
#5	2.125	28	19
#6	2.250	34	23
#7	2.625	49	27
#8	3.000	56	30
#9	3.500	63	34
#10	3.875	71	39
#11	4.250	78	43

FOUNDATION WALL REINFORCEMENT - HORIZONTAL BARS LAP SPLICE LENGTH SCHEDULE (INCHES)

BAR SIZE	MIN BAR SPACING (INCHES)	TENSION (LTS)	COMPRESSION (LCS)
		f'c = 5 KSI	
#4	1.500	30	15
#5	1.875	36	19
#6	2.250	44	23
#7	2.625	64	27
#8	3.000	73	30
#9	3.500	82	34
#10	3.875	92	39
#11	4.250	101	43

SLAB/SLAB-ON-GRADE REINFORCEMENT LAP SPLICE LENGTH SCHEDULE (INCHES)

BAR SIZE	MIN BAR SPACING (INCHES)	TENSION (LTS)
		f'c = 5 KSI
#4	1.500	23
#5	1.875	28
#6	2.250	34
#7	2.625	73
#8	3.000	83

LAP SPLICE NOTES:

1. TABULATED VALUES ARE PER ACI 318-08 REQUIREMENTS FOR NORMALWEIGHT CONCRETE. THE VALUES ON THIS SHEET DO NOT APPLY TO LIGHTWEIGHT CONCRETE.
2. SEE TYPICAL DETAILS FOR CLEAR COVER.
3. MINIMUM BAR SPACING DIAGRAM - "S"

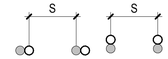

FIRST BAR

SECOND BAR PLACED OR SPLICE BAR

4. WHERE ACTUAL CONDITIONS DIFFER FROM THE CLEAR COVER SHOWN ON THE TYPICAL DETAILS OR DIFFER FROM PROVIDED SCHEDULED BAR SIZE, MINIMUM SPACING AND/OR f'c, LENGTHS SHALL BE ADJUSTED ONLY WITH THE APPROVAL OF THE STRUCTURAL ENGINEER OF RECORD.
5. TABULATED VALUES ARE FOR NON-EPOXY COATED REINFORCEMENT. FOR EPOXY COATED REINFORCEMENT MULTIPLY VALUES BY 1.3 FOR "TOP BARS" AND 1.5 FOR ALL OTHER REINFORCEMENT.
6. WHERE BARS OF DIFFERENT SIZES ARE LAP SPLICED IN TENSION, THE LAP LENGTH SHALL BE THE TENSION LAP SPLICE LENGTH (LTS) OF THE SMALLER BAR.
7. WHERE BARS OF DIFFERENT SIZES ARE LAP SPLICED IN COMPRESSION, THE COMPRESSION LAP LENGTH (LCS) SHALL BE THE LARGER OF THE COMPRESSION DEVELOPMENT LENGTH (Ldc) OF THE LARGER BAR OR THE COMPRESSION LAP SPLICE LENGTH OF THE SMALLER BAR.
8. "TOP BARS" ARE DEFINED PER ACI HORIZONTAL REINFORCEMENT SO PLACED THAT MORE THAN 12" OF FRESH CONCRETE IS CAST IN THE MEMBER BELOW THE DEVELOPMENT LENGTH OR SPLICE . "OTHER BARS ARE ALL BARS FOR WHICH THIS DOES NOT APPLY".
9. FOUNDATION WALL LAP SPLICES ARE BASED ON A MINIMUM 2 INCH CLEAR COVER. IF CLEAR COVER IS REDUCED ON INTERIOR FACE SUCH THAT THE CLEAR COVER IS LESS THAN THE BAR DIAMETER, INCREASE LAP LENGTH BY 50%.

hMa
hanrahan Meyers architect,llp

ARCHITECT:
HANRAHAN MEYERS ARCHITECTS, LLP
6 MAIDEN LANE SUITE 510
NEW YORK, NY 10038
T: (212) 989-6026 F: (917) 591-9825

Cosentini

MEP ENGINEERS:
Cosentini Associates
Two Pennsylvania Plaza - Third Floor
NEW YORK, NY 10121
T: (212) 615-3760 F: (212) 615-3600

Thornton Tomasetti

STRUCTURAL ENGINEERS:
Thornton Tomasetti
51 Madison Avenue
NEW YORK, NY 10010
T: (917) 661-7800 F: (917) 661-7801

EK|A PLLC

LANDSCAPE ARCHITECTS:
Elizabeth Kennedy Landscape Architect, PLLC
Brooklyn Navy Yard Building 275 Room 202
63 Flushing Avenue Unit 264
BROOKLYN, NY 11205
T: (718) 569-8837 F: (718) 709-5885

PROJECT:

Kowsky Plaza Repair

401 South End Avenue
New York, NY 10280

PROPERTY INFORMATION:

NOTES:

Rev No.	Description	Date
1	COORDINATION SET	08.21.2015
2	BID SET	08.31.2015

DOB STAMPS AND SIGNATURE:

SEAL AND SIGNATURE:

DATE: 11/15/2015

DRAWN BY: Author

CHECKED BY: Checker

SHEET TITLE:

LAP SPLICE SCHEDULES

SHEET NUMBER:

S-006.00

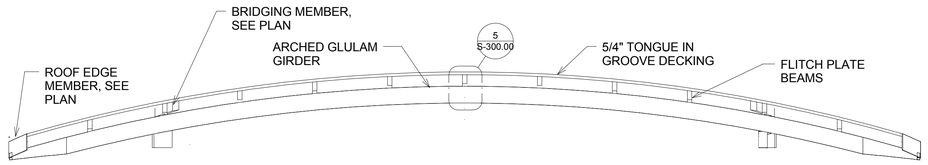

1 ARCHED GLULAM GIRDER SECTION
3/8" = 1'-0"

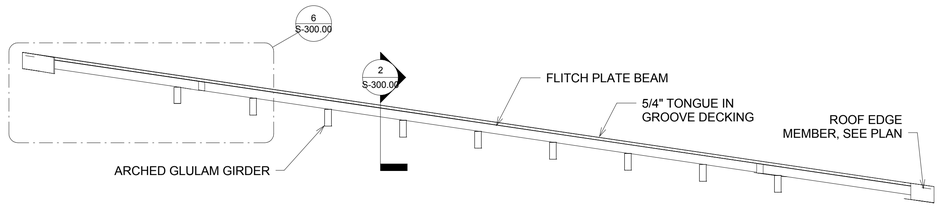

2 FLITCH PLATE SECTION
3/8" = 1'-0"

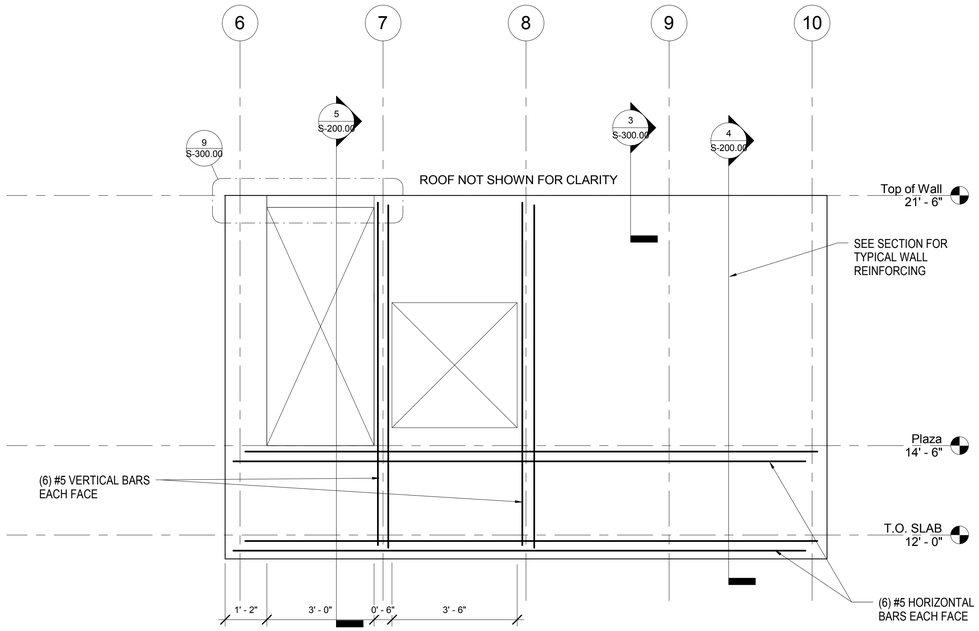

3 ADDITIONAL WALL REINFORCING_FULL
1/2" = 1'-0"

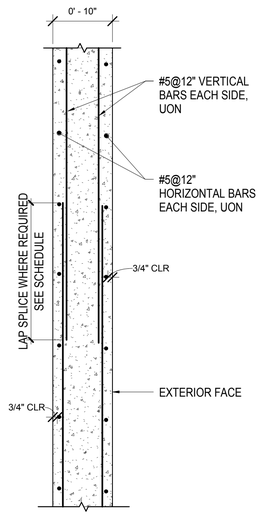

4 TYPICAL WALL REINFORCING
1" = 1'-0"

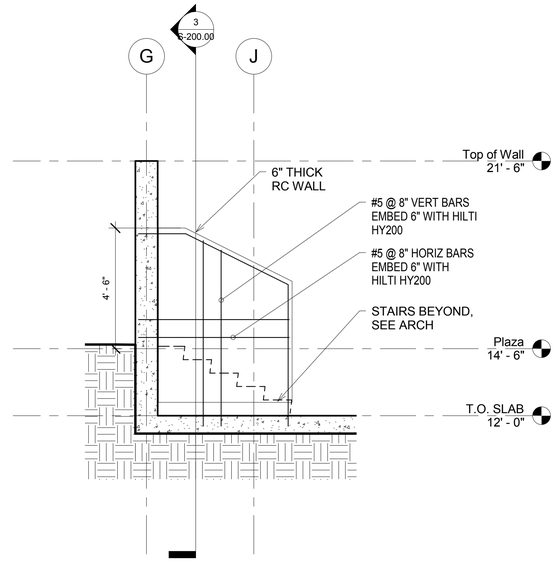

5 INTERIOR STAIR SECTION
3/8" = 1'-0"

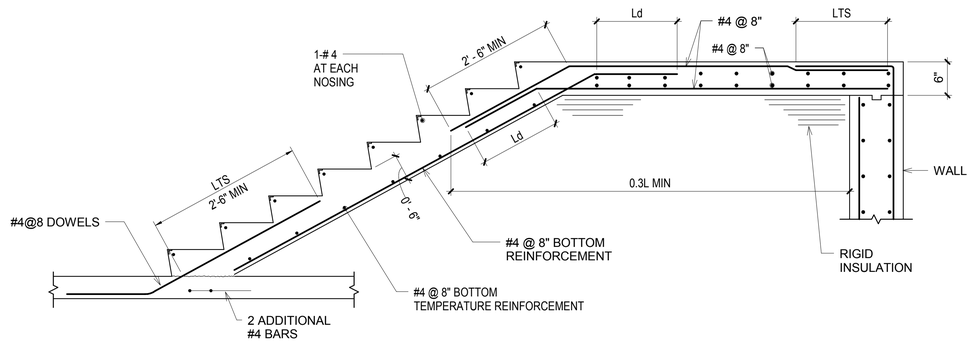

6 TWO OR THREE RUN STAIR SUPPORTED BY SLAB
NOT TO SCALE

hMa
hanrahan Meyers architect,llp

ARCHITECT:
HANRAHAN MEYERS ARCHITECTS, LLP
6 MAIDEN LANE SUITE 510
NEW YORK, NY 10038
T: (212) 989-6026 F: (917) 591-9825

Cosentini

MEP ENGINEERS:
Cosentini Associates
Two Pennsylvania Plaza - Third Floor
NEW YORK, NY 10121
T: (212) 615-3760 F: (212) 615-3600

Thornton Tomasetti

STRUCTURAL ENGINEERS:
Thornton Tomasetti
51 Madison Avenue
NEW YORK, NY 10010
T: (917) 661-7800 F: (917) 661-7801

EK|A PLLC

LANDSCAPE ARCHITECTS:
Elizabeth Kennedy Landscape Architect, PLLC
Brooklyn Navy Yard Building 275 Room 202
63 Flushing Avenue Unit 264
BROOKLYN, NY 11205
T: (718) 569-8837 F: (718) 709-5885

PROJECT:

Kowsky Plaza Repair

401 South End Avenue
New York, NY 10280

PROPERTY INFORMATION:

NOTES:

Rev No.	Description	Date
1	COORDINATION SET	08.21.2015
2	BID SET	08.31.2015

DOB STAMPS AND SIGNATURE:

SEAL AND SIGNATURE:

DATE: 11/15/2015

DRAWN BY: Author

CHECKED BY: Checker

SHEET TITLE:

BUILDING SECTIONS & DETAILS

SHEET NUMBER:

S-200.00

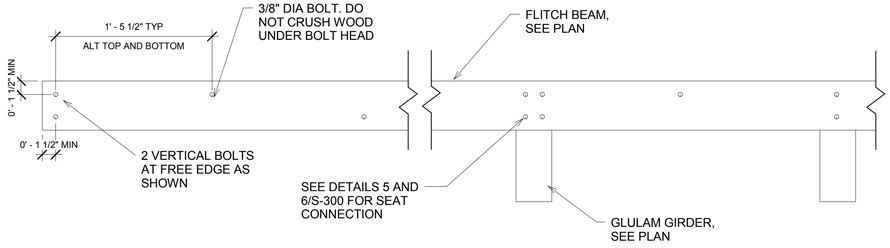

1 FLITCH BEAM BOLTING PATTERN
1 1/2" = 1'-0"

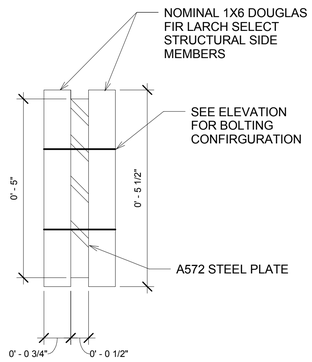

2 FLITCH BEAM CROSS SECTION
6" = 1'-0"

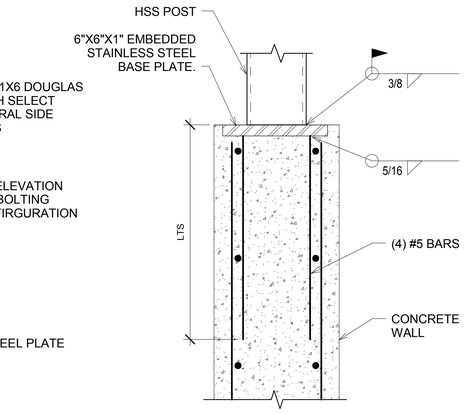

3 DETAIL AT POST BASE
1 1/2" = 1'-0"

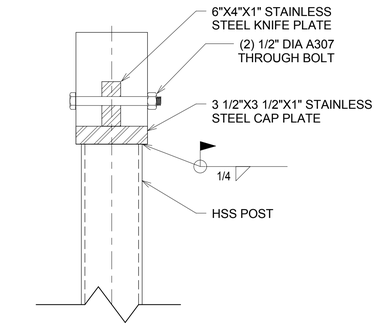

4 DETAIL AT TOP OF POST
3" = 1'-0"

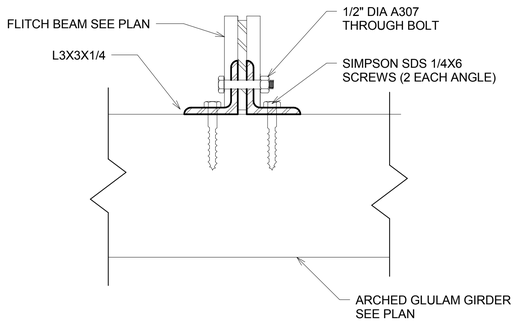

5 TYPICAL BEAM BEARING ON GIRDER
3" = 1'-0"

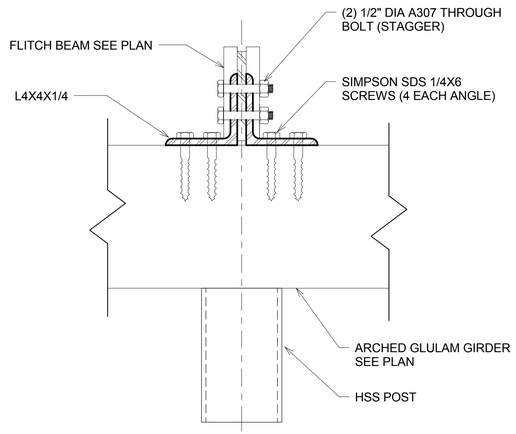

6 BEAM BEARING ON GIRDER_AT POST LOCATIONS
3" = 1'-0"

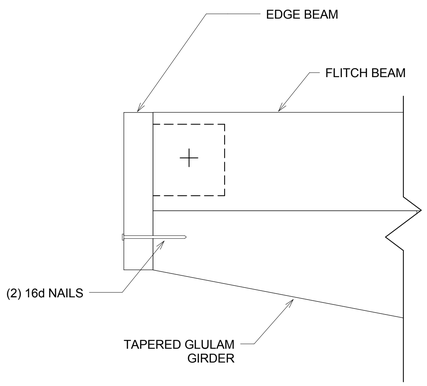

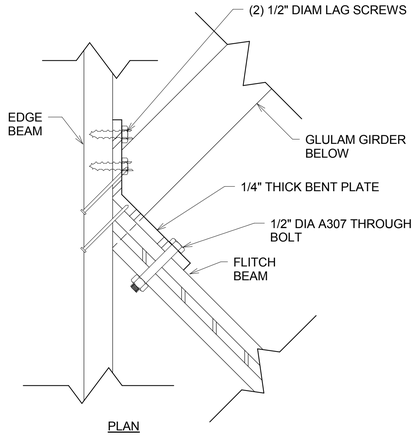

7 EDGE BEAM NAILING DETAIL
NOT TO SCALE

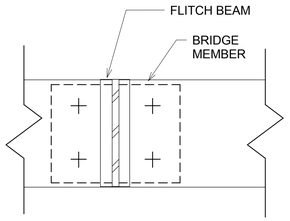

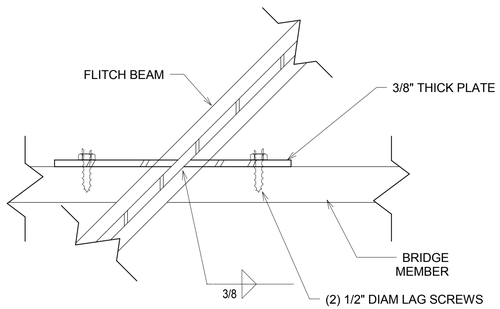

8 BRIDGE MEMBER NAILING DETAIL
NOT TO SCALE

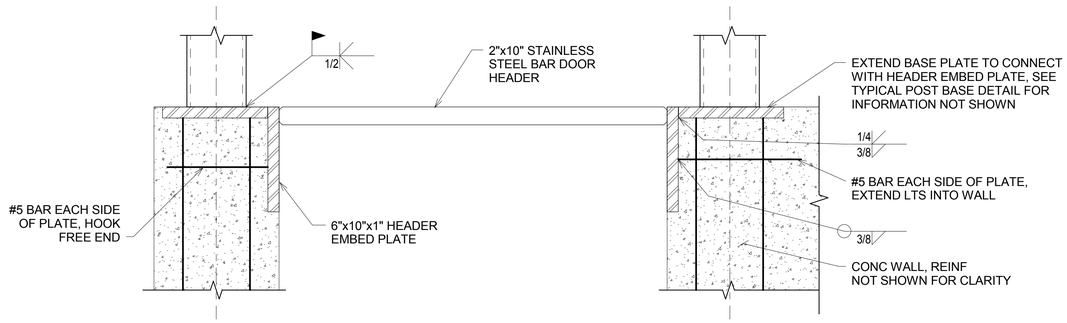

9 DETAIL AT POST BASE
1 1/2" = 1'-0"

hMa
hanrahan Meyers architect,llp

ARCHITECT:
HANRAHAN MEYERS ARCHITECTS, LLP
6 MAIDEN LANE SUITE 510
NEW YORK, NY 10038
T: (212) 989-6026 F: (917) 591-9825

Cosentini

MEP ENGINEERS:
Cosentini Associates
Two Pennsylvania Plaza - Third Floor
NEW YORK, NY 10121
T: (212) 615-3760 F: (212) 615-3600

Thornton Tomasetti

STRUCTURAL ENGINEERS:
Thornton Tomasetti
51 Madison Avenue
NEW YORK, NY 10010
T: (917) 661-7800 F: (917) 661-7801

EK|A PLLC

LANDSCAPE ARCHITECTS:
Elizabeth Kennedy Landscape Architect, PLLC
Brooklyn Navy Yard Building 275 Room 202
63 Flushing Avenue Unit 264
BROOKLYN, NY 11205
T: (718) 569-8837 F: (718) 709-5885

PROJECT:

Kowsky Plaza Repair

401 South End Avenue
New York, NY 10280

PROPERTY INFORMATION:

NOTES:

Rev No.	Description	Date
1	COORDINATION SET	08.21.2015
2	BID SET	08.31.2015

DOB STAMPS AND SIGNATURE:

SEAL AND SIGNATURE:

DATE: 11/15/2015

DRAWN BY: Author

CHECKED BY: Checker

SHEET TITLE:

ROOF DETAILS

SHEET NUMBER:

S-300.00

FILE NAME: I:\140143\Plum\140143 P-001.dwg SAVED ON 11/24/2015 3:34 PM PLOTTED ON 11/24/2015 3:43 PM PLOTTED BY MARTIN, BENJAMIN

PLUMBING SPECIFICATIONS

1. REFERENCE TO GENERAL CONDITIONS
   A. PERFORM THE WORK IN ACCORDANCE WITH THE REQUIREMENTS OF THE GENERAL CONDITIONS.

2. GENERAL
   A. COORDINATE WORK WITH ALL OTHER TRADES AND EXISTING CONDITIONS OF THE JOB SITE AND MAINTAIN REQUIRED CEILING HEIGHTS AND SPACE CONDITIONS.
   B. PROVIDE ALL MATERIAL, EQUIPMENT, SERVICES, LABOR AND TESTS NECESSARY FOR COMPLETE EXECUTION OF THE PLUMBING WORK IN ACCORDANCE WITH THE GOVERNING CODES AND AUTHORITIES.

3. CODES, PERMITS AND INSPECTIONS
   A. ALL WORK SHALL MEET OR EXCEED THE LATEST REQUIREMENTS OF ALL NATIONAL, STATE, COUNTY, MUNICIPAL AND OTHER AUTHORITIES EXERCISING JURISDICTION OVER CONSTRUCTION WORK AT THE PROJECT.
   B. ALL REQUIRED PERMITS AND INSPECTION CERTIFICATES SHALL BE OBTAINS, PAID FOR, AND MADE AVAILABLE AT THE COMPLETION OF THE WORK.

4. TESTS
   A. BEFORE AN APPLICATION FOR FINAL ACCEPTANCE OF THE WORK WILL BE CONSIDERED, ALL TESTS DEEMED NECESSARY TO SHOW PROPER EXECUTION OF THE WORK SHALL HAVE BEEN PERFORMED AND COMPLETED IN THE PRESENCE OF AN ARCHITECT'S/OWNER'S REPRESENTATIVE, SCHEDULING OF ALL TESTING PROCEDURES SHALL BE ARRANGED TO SUIT THE CONVENIENCE OF THE ARCHITECT AND/OR OWNERS REPRESENTATIVE.

5. GUARANTEES AND CERTIFICATES
   A. ALL WORK SHALL BE GUARANTEED TO BE FREE FROM LEAKS OR DEFECTS. ANY DEFECTIVE MATERIALS OR WORKMANSHIP AS WELL AS DAMAGE TO THE WORK OF ALL TRADES RESULTING FROM SAME SHALL BE REPLACED OR REPAIRED AS DIRECTED FOR THE DURATION OF STIPULATED GUARANTEED PERIODS. THE DURATION OF GUARANTEE PERIODS SHALL BE ONE YEAR.

6. CONNECTIONS TO EXISTING WORK & DEMOLITION
   A. CONNECT NEW WORK TO EXISTING WORK IN A NEAT AND APPROVED MANNER. RESTORE EXISTING WORK DISTURBED TO ORIGINAL CONDITION.
   B. PROVIDE CAPS AND OUTLETS AS REQUIRED ON EXISTING PIPING.
   C. REMOVE AND/OR RELOCATE EXISTING AND OTHER WORK AS REQUIRED BY ALTERATION, AS NOTED OR AS DIRECTED. ALL REMOVED EXISTING WORK SHALL BE DISPOSED OF, OR SALVAGED AND REMOVED TO DESIGNATED AREAS AS DIRECTED BY OWNER.
   D. COORDINATE WITH ALL OTHER TRADES EXISTING CONDITIONS AT THE JOB SITE. MAINTAIN REQUIRED CEILING HEIGHTS AND SPACE CONDITIONS. VERIFY ALL PIPING LOCATIONS WITH EXISTING CONDITIONS.
   E. THE EXISTING PLUMBING SYSTEM SHALL BE LEFT IN PERFECT WORKING ORDER UPON COMPLETION OF ALL NEW WORK.
   F. PLAN INSTALLATION OF NEW WORK AND CONNECTIONS TO EXISTING WORK TO INSURE MINIMUM INTERFERENCE WITH REGULAR OPERATION OF EXISTING FACILITIES. SUBMIT TO OWNER AND ARCHITECT FOR APPROVAL, DATE AND SCHEDULE OF NECESSARY TEMPORARY SHUT-DOWNS OF EXISTING SERVICES. ALL SHUT-DOWNS SHALL BE MADE AT SUCH TIMES AS WILL NOT INTERFERE WITH REGULAR OPERATION OF EXISTING FACILITIES AND ONLY AFTER WRITTEN APPROVAL OF OWNER. TO INSURE CONTINUOUS OPERATION, MAKE NECESSARY TEMPORARY CONNECTIONS BETWEEN NEW AND EXISTING WORK. ALL COSTS RESULTING FROM TEMPORARY SHUT-DOWN SHALL BE BORNE BY THIS CONTRACTOR.

7. MISCELLANEOUS

   PROVIDE THE FOLLOWING:

   - SCAFFOLDING, RIGGING, HOISTING.
   - CUTTING AND PATCHING.
   - RUBBISH REMOVAL.
   - SLEEVES AND OPENINGS (WATERPROOF SLEEVES & FLASHING THRU WATERPROOF CONSTRUCTION)
   - CAULKING, PACKING AND FILLING OF SLEEVES & OPENINGS.
   - OBTAINING ALL REQUIRED PERMITS, APPROVALS AND INSPECTION CERTIFICATES.
   - GUARANTEE ALL WORK, LABOR AND MATERIALS FOR ONE YEAR FOLLOWING DATE OF ACCEPTANCE.
   - OPERATING AND MAINTENANCE INSTRUCTIONS.
   - VERIFYING EXISTING CONDITIONS AT THE PROJECT SITE.
   - ACCESS DOORS FOR VALVES.
   - SPARE PARTS AND TOOLS.
   - TEST: OPERATING, PERFORMANCE AND CODE REQUIRED TESTS.
   - PROTECTION OF WORK DURING CONSTRUCTION.
   - COORDINATION WITH OTHER TRADES.
   - CLEANING.
   - ADJUSTING AND BALANCING.
   - IDENTIFICATION: VALVE TAGS, VALVE TAG SCHEDULES.
   - HANGER AND SUPPORTS FOR PIPING AND EQUIPMENT.
   - CORE DRILLING EXISTING SLABS.
   - COMPLIANCE WITH MATERIALS AND EQUIPMENT DIVISION (M.E.A.) OF N.Y.C.

8. PIPING MATERIALS

SYSTEM	PIPING	FITTING	MISC.
ALL SOIL, WASTE, VENT & DRAINING	CAST IRON HUB & SPIGOT SOIL PIPE	HUB & SPIGOT CAST IRON SOIL WITH PICKED OAKUM AND MOLTEN JOINTS	
	HUB & PLAIN END, CAST IRON SOIL PIPE	GASKETED ELASTO-MERIC NEOPRENE JOINTS CAST IRON SOIL HUB & PLAIN END	
	NO-HUB CAST IRON SOIL PIPE	NO-HUB CAST IRON SOIL w/ELASTOMERIC EXTRA HEAVY 4 BAND GASKET & STAINLESS STEEL CLAMP	
	GALVANIZED STEEL, SCHEDULE 40	GALVANIZED CAST IRON RECESSED DRAINAGE FITTINGS FOR WASTE PIPING & CAST IRON OR GALVANIZED MALLEABLE IRON FITTINGS FOR VENT PIPING.	
DOMESTIC WATER PIPING	TYPE L COPPER TUBE	WROUGHT COPPER OR BRONZE SOLDER JOINT FITTINGS W/95% TIN - 5% ANTIMONY SOLDER JOINTS	FITTING PRESS. RATING 125 PSI STEAM

9. INSULATION

   INSULATE ALL DOMESTIC HOT & COLD WATER PIPING WITH 1/2" THICK FIBERGLASS INSULATION, FACTORY APPLIED VAPOR BARRIER JACKET. JOINTS & FITTINGS VAPOR SEALED. INSULATION W/MAX. K FACTOR OR .24 AT 75° F MEAN TEMP.

10. VALVES

DOMESTIC WATER			PRESS. P.S.I.	
TYPE	END	JENKINS NO.	W.W.P.	MATERIAL
GATE	SOLDER	1240	200	BRONZE
	SCREWED	370	200	BRONZE
BALL	SOLDER	APOLLO. NO. 70 - 100	600	BRONZE
	SCREWED	70 - 200	600	BRONZE

11. DIELECTRIC

    ALL DOMESTIC WATER FERROUS-TO-NON FERROUS PIPE CONNECTIONS MADE w/DIELECTRIC PIPE OR FLANGE UNION ISOLATING JOINTS TO PREVENT ELECTROLYTIC ACTION BETWEEN DISSIMILAR METALS.

    MISCELLANEOUS
    - CUTTING AND PATCHING.
    - RUBBISH REMOVAL.
    - SLEEVES AND OPENINGS.
    - CAULKING, PACKING AND FILLING OF SLEEVES & OPENINGS.
    - OBTAINING ALL REQUIRED PERMITS, APPROVALS AND INSPECTION CERTIFICATES.
    - GUARANTEE ALL WORK, LABOR AND MATERIALS FOR ONE YEAR FOLLOWING DATE OF ACCEPTANCE.
    - OPERATING AND MAINTENANCE INSTRUCTIONS.
    - VERIFYING EXISTING CONDITIONS.
    - SPARE PARTS AND TOOLS.
    - TEST: OPERATING, PERFORMANCE AND CODE REQUIRED TESTS.
    - PROTECTION OF WORK DURING CONSTRUCTION.
    - COORDINATION WITH OTHER TRADES.
    - CLEANING.
    - ADJUSTING AND BALANCING.
    - IDENTIFICATION: VALVE TAGS, VALVE TAG SCHEDULES, PIPING IDENTIFICATION.
    - HANGER AND SUPPORTS.
    - ACCESS DOORS: FOR VALVES.

12. PLUMBING FIXTURES
    A. ALL FITTINGS, ESCUTCHEONS, FAUCETS, TRAPS, EXPOSED PIPING, ETC., SHALL BE BRASS CHROME PLATED OVER NICKLE PLATE WITH POLISHED FINISH. ANY HANGER NUTS VISIBLE SHALL LIKEWISE BE CHROME PLATED OVER NICKEL PLATE.
    B. BEFORE ROUGHING WORK IS STARTED, SUBMIT TO THE ARCHITECT COMPLETE FIGURED DRAWINGS AND CUTS OF EACH AND ALL OF THE PLUMBING FIXTURES, FITTINGS, TRIMMINGS, ETC. AND SECURE HIS APPROVAL BEFORE PROCEDURE WITH THE INSTALLATION OF ANY WORK. THIS DRAWINGS SHALL SHOW ACCURATELY THE LOCATIONS AND INDICATE IF AND WHERE DIMENSIONS ON ARCHITECTURAL DRAWINGS CANNOT BE MET.
    C. PROVIDE ALL HANGERS, SUPPORTS, BRACKETS, ETC., FOR THE PROPER INSTALLATION OF THE SINK, ETC., REQUIRING SUPPORT. SUCH SUPPORTS SHALL BE IN ACCORDANCE WITH THE RECOMMENDATIONS OF THE MANUFACTURER OF THE FIXTURES.
    D. ALL PLUMBING FIXTURES AND TRIM SHALL COMPLY WITH THE LATEST N.Y.S. AND N.Y.C. WATER CONSERVATION REQUIREMENTS OF LOCAL LAW 29/89.
    E. PLUMBING FIXTURE(S) & FAUCET(S) SHALL BE AS SELECTED BY THE ARCHITECT.

13. FIRESTOPPING
    A. ALL SPACES BETWEEN PIPES AND THEIR RESPECTIVE SLEEVES SHALL BE PACKED FULL DEPTH WITH MINERAL WOOL, OR OTHER EQUALLY FIRE RESISTANT MATERIAL AND COMPRESSED FIRMLY IN PLACE. FIBERGLASS SHALL NOT BE USED. SLEEVES CLEARANCES SHALL NOT EXCEED ½ INCH BETWEEN PIPES (ORDUCTS) AND SLEEVES. USE INDIVIDUAL SLEEVES FOR EACH PIPE OR DUCT. BEFORE ESCUTCHEONS ARE ATTACHED CAULKING MUST BE AVAILABLE FOR INSPECTION AND NOTIFICATION SHOULD BE MADE.
    B. FIRE STOPPING MATERIAL AND INSTALLED CONFIGURATION SHALL MAINTAIN THE FIRE RATING OF PENETRATED WALL, FLOOR OR CEILING.

14. HWAT SELF-REGULATING TEMPERATURE MAINTENANCE FOR DOMESTIC HOT WATER PIPING.
    A. PROVIDE COMPLETE SYSTEM OF UL LISTED(NEW YORK CITY APPROVED) SELF-REGULATING HEATERS AND COMPONENTS APPLIED TO THE DOMESTIC HOT WATER PIPING WHERE INDICATED TO MAINTAIN THE SELECTED WATER TEMPERATURE. HWAT PLUS AS MANUFACTURED BY RAYCHEM CORP. OR OTHER APPROVED EQUAL WHERE INDICATED ON PLANS.
    B. THE CABLE SHALL BE SPECIFICALLY DESIGNED, MANUFACTURED, LISTED AND APPROVED FOR DOMESTIC HOT WATER TEMPERATURE MAINTENANCE.
    C. THE NOMINAL WATER TEMPERATURE AT 115°F HWAT G-2 FOR GENERAL HOT WATER REQUIREMENTS.
    D. PROVIDE CONTROL PANEL.

15. PROVIDE INSULATED SAFETY KITS ON ALL LAVATORIES & SINKS AS MANUF. BY BROCAR, TRUEBRO OR MCGUIRE.

16. ALL SHUT DOWNS MUST BE COORDINATED WITH THE CHIEF ENGINEER AND IN ACCORDANCE WITH THE PROPERTY RULES AND REGULATIONS. FOR ALTERATIONS.

17. GENERAL CONTRACTOR AND PLUMBING CONTRACTOR SHOULD COORD. A SITE VISIT WITH PROPERTY OWENER(S) TO VERIFY FIELD CONDITIONS.

18. ALL PLUMBING TIE INS TO BE COORDINATED WITH PROPERTY OWNER(S).

NEW YORK CITY BUILDING DEPARTMENT PLUMBING NOTES

THE PLUMBING SYSTEMS (SANITARY, WASTE, VENT, WATER DISTRIBUTION, AND GAS) AND ALL ASSOCIATED EQUIPMENT WILL BE INSTALLED AND MAINTAINED IN ACCORDANCE WITH THE FULL REQUIREMENTS OF THE NEW YORK CITY PLUMBING CODE. COMPLIANCE WITH THE FULL PROVISIONS OF ALL NEW YORK CITY BUILDING AND PLUMBING CODE ACCESSIBILITY REQUIREMENTS AND PLUMBING FIXTURE FLOW REQUIREMENTS OF THE NEW YORK CITY 2014 PLUMBING CODE.

1. THE SANITARY SYSTEM SHALL BE PROVIDED IN FULL ACCORDANCE WITH THE GENERAL PROVISIONS OF THE PLUMBING CODE.
2. THE MATERIALS USED IN THE PLUMBING SYSTEMS WILL BE PROVIDED IN FULL ACCORDANCE WITH THE PLUMBING CODE.
3. EQUIPMENT HOOK-UP AND THE JOINING WILL BE FULL COMPLIANCE WITH THE PLUMBING CODE.
4. THE INSTALLATION OF FIXTURES WILL BE IN FULL ACCORDANCE WITH THE PLUMBING CODE.
5. TRAPS FOR FIXTURES AND DRAIN LINES WILL BE PROVIDED AND CLEANOUTS INSTALLED IN FULL COMPLIANCE WITH THE PLUMBING CODE.
6. VERTICAL AND HORIZONTAL PIPING WILL BE HUNG AND SUPPORTED AS DIRECTED IN SPECIFICATIONS AND WITH THE FULL COMPLIANCE WITH THE PLUMBING CODE.
7. THE WATER SUPPLY SYSTEMS OF THE SUBJECT PROPERTY SHALL BE INSTALLED AND MAINTAINED IN FULL COMPLIANCE WITH THE PLUMBING CODE.
8. SHOCK ABSORBERS SHALL BE PROVIDED IN FULL COMPLIANCE WITH THE PLUMBING CODE WHERE ALL QUICK CLOSING VALVES ARE INSTALLED AND ALL EQUIPMENT CONTAINING QUICK CLOSING SOLENOID VALVES SUCH AS ICE MAKERS ,COFFE MACHINES , DISHWASHERS ,CLOTHES WASHERS, ELECTRONIC OPERATED FLUSH VALVES AND FAUCETS, AND SHOWER MIXING VALVES THAT HAVE A SINGLE LEVER HANDLE.
9. THE SANITARY DRAINAGE SYSTEM WILL BE SIZED AND INSTALLED IN FULL COMPLIANCE WITH THE PLUMBING CODE.
10. THE VENT PIPING FOR THE SANITARY DRAINAGE SYSTEM OF THE SUBJECT PROPERTY WILL BE INSTALLED IN FULL COMPLIANCE WITH THE PLUMBING CODE.
11. THE STORM DRAINAGE SYSTEM AND PIPING WILL BE INSTALLED IN FULL COMPLIANCE WITH THE PLUMBING CODE.
12. GAS PIPING AND EQUIPMENT WILL BE INSTALLED IN FULL COMPLIANCE WITH THE NEW YORK CITY FUEL GAS CODE.
13. ALL TRENCHING SHALL BE DONE IN ACCORDANCE WITH THE REQUIREMENTS OF THE PLUMBING CODE.
14. RAT PROOFING SHALL BE IN ACCORDANCE WITH THE PLUMBING CODE.
15. TEMPORARY TOILET FACILITIES SHALL BE PROVIDED FOR CONSTRUCTION PERSONNEL AS PER PLUMBING CODE.

PLUMBING INSTALLATION CRITERIA

EACH BIDDER SHALL VISIT THE SITE AND BECOME INFORMED AS TO THE CONDITION OF THE PREMISES AND THE EXTENT AND CHARACTER OF WORK REQUIRED. NO ADDITIONAL COMPENSATION WILL BE PROVIDED DUE TO FIELD CONDITIONS.

1. PROVIDE ROUGH-IN AND FINAL CONNECTIONS FOR ALL PLUMBING FIXTURES INCLUDING WASTE, VENTS, HOT AND COLD WATER, AND PROVIDE ALL PLUMBING WORK NECESSARY TO MAKE PUMPS, EQUIPMENT, ETC. ENTIRELY OPERABLE AND ACCEPTABLE TO LOCAL OFFICIALS AND PROPERTY OWNER(S).
2. PLUMBING CONTRACTOR SHALL LOCATE ALL PIPING AND PLUMBING ROUGH-IN FOR PLUMBING FIXTURES IN ACCORDANCE WITH ROUGH-IN DRAWINGS PROVIDED BY EQUIPMENT MANUFACTURERS.
3. ALL VISIBLY EXPOSED PIPE TO EQUIPMENT SHALL BE CHROME PLATED BRASS.
4. PROVIDE SHUT-OFF VALVES FOR EACH PLUMBING FIXTURE AND PIECE OF EQUIPMENT.
5. PROVIDE TRAPS ON ALL WASTE PIPING FROM PLUMBING FIXTURES AND PIECE OF EQUIPMENT.
6. COORDINATE POSITION OF SLEEVES AND OPENINGS THROUGH FLOOR WITH THE GENERAL CONTRACTOR.
7. PROVIDE VACUUM BREAKERS AND CHECK VALVES FOR THE PLUMBING FIXTURES WHERE AND WHEN REQUIRED BY CODE.
8. ALL PIPING AND EQUIPMENT SHALL BE SUBSTANTIALLY SUPPORTED FROM THE EXISTING STRUCTURE. HANGER AND SUPPORTS SHALL BE SPECIFICALLY APPROVED FOR USE IN PLUMBING SYSTEMS.
   A. WHERE OVERHEAD CONSTRUCTION DOES NOT PERMIT FASTENING OF HANGER RODS IN REQUIRED LOCATIONS, PROVIDE ADDITIONAL STEEL FRAMING AS REQUIRED AND APPROVED.
   B. NO PLUMBING PIPING SHALL BE HUNG FROM THE PIPING OF OTHER TRADES OR DUCTWORK. HANGERS SHALL BE OF HEAVY CONSTRUCTION, SUITABLE FOR THE SIZE OF PIPE TO BE SUPPORTED.
9. PLUMBING FIXTURES TO BE APPROVED BY THE GENERAL CONTRACTOR AND INSTALLED BY THE PLUMBING CONTRACTOR.
10. PLUMBING FIXTURES SHALL BE AS SPECIFIED BY ARCHITECT.
11. ALL PLUMBING FIXTURES SPECIFIED BY THE ARCHITECT. SEE ARCHITECTURAL DRAWINGS, SPECIFICATIONS, DETAILS AND ELEVATIONS OF THE PANTRY, BATH, ETC. FOR REQUIRED PLUMBING CONNECTIONS.
12. REPAIR ALL FIRE PROOFING WHERE DAMAGED FROM HANGER / PIPE REMOVAL.

PLUMBING DEMOLITION AND ALTERATION WORK NOTES

1. EACH BIDDER SHALL VISIT THE SITE AND BECOME INFORMED AS TO THE CONDITION OF THE PREMISES AND THE EXTENT AND CHARACTER OF WORK REQUIRED. NO ADDITIONAL COMPENSATION WILL BE APPROVED DUE TO FIELD CONDITIONS.
2. PROVIDE DEMOLITION FOR WORK AS SHOWN ON DRAWINGS OR DESCRIBED HEREIN. IF ASBESTOS INSULATION IS PRESENT OR SUSPECTED TO BE PRESENT, INFORM THE OWNER IN WRITING SO THAT SUCH REMOVAL CAN BE CARRIED OUT BY QUALIFIED PERSONNEL HIRED BY THE OWNER. DO NOT COMMENCE DEMOLITION UNTIL SUCH WORK HAS BEEN COMPLETED.
3. REFER TO ARCHITECTURAL DRAWINGS FOR IDENTIFICATION OF FIXTURES AND EQUIPMENT TO BE REMOVED.
4. ALL PIPING FROM FIXTURES AND EQUIPMENT TO BE REMOVED SHALL BE CAPPED BACK AT STACK AND RISERS. IN NO CASE SHALL DEAD ENDS REMAIN ON SANITARY PIPING. DEAD ENDS SHALL NOT EXCEED A MAXIMUM OF 2'-0".
5. EXACT SIZES AND LOCATIONS OF ALL EXISTING PIPING SHALL BE VERIFIED ON THE JOB.
6. NO REMOVED EXISTING PIPING SHALL BE REUSED UNLESS OTHERWISE INDICATED.
7. THIS CONTRACTOR SHALL NOT INTERRUPT ANY OF THE SERVICES OF THE EXISTING PROPERTY NOR INTERFERE WITH THE SERVICES IN ANY WAY WITHOUT THE EXPRESSED PERMISSION OF THE OWNER. SUCH INTERRUPTIONS AND INTERFERENCES SHALL BE MADE AS BRIEF AS POSSIBLE AND ONLY AT THE TIME SUITED BY THE OWNER.
8. WHERE THE WORK MAKES TEMPORARY SHUTDOWNS OF SERVICES UNAVOIDABLE, THEY SHALL BE MADE AT NIGHT OR AT TIMES AS WILL CAUSE THE LEAST INTERFERENCE WITH THE ESTABLISHED OPERATING ROUTINE OF THE PROPERTY.
9. THIS CONTRACTOR SHALL ARRANGE THE WORK CONTINUOUSLY, INCLUDING OVERTIME APPROVED BY ARCHITECT IF REQUIRED, TO ASSURE THAT SERVICES WILL BE SHUTDOWN AND CUT-INS DONE ONLY DURING THE TIME ACTUALLY REQUIRED TO MAKE THE NECESSARY CONNECTIONS TO EXISTING WORK.
10. THIS CONTRACTOR SHALL GIVE AMPLE WRITTEN NOTICE IN ADVANCE TO THE OWNER OF ANY REQUESTED SHUTDOWNS.
11. ANY AND ALL REQUIRED DEMOLITION WORK TO BE PERFORMED ABOVE EXISTING SUSPENDED CEILINGS AND FURRED OUT WALLS SHALL BE DONE AT THE TIME WHEN THE EXISTING CEILINGS AND FURRED OUT WALLS ARE REMOVED BY THE GENERAL CONTRACTOR.
12. TO INSURE CONTINUOUS OPERATION, MAKE ALL NECESSARY TEMPORARY CONNECTIONS BETWEEN NEW AND EXISTING WORK. ALL COSTS RESULTING FROM TEMPORARY SHUTDOWNS SHALL BE BORNE BY THIS CONTRACTOR.
13. ALL EXISTING SYSTEMS SHALL BE LEFT IN PERFECT WORKING ORDER UPON COMPLETION OF ALL NEW WORK.
14. REFER TO SPECIFICATIONS FOR ADDITIONAL REQUIREMENTS.

LEGEND

----------	EXISTING PIPING
——— • ———	NEW COLD WATER PIPING
——— ·· ———	NEW HOT WATER PIPING
———-/-———	NEW HOT WATER PIPING W/HWAT
------- V -------	NEW VENT PIPING
——— S ———	NEW SOIL OR WASTE PIPING
×—×—×—×—×	EXISTING PIPING TO BE REMOVED
	BALL VALVE
DI	CHECK VALVE
	VACUUM BREAKER
	NEW CONNECTION TO EXISTING

PLUMBING DRAWING LIST

DWG #	DESCRIPTION
P-001.00	PLUMBING SPECIFICATIONS, NOTES, DWG. LIST & DETAILS.
P-300.00	PLUMBING PLAN & RISER DIAGRAM

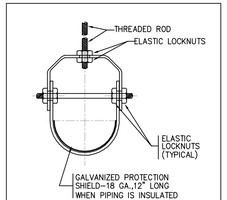

CLEVIS HANGER
NO SCALE

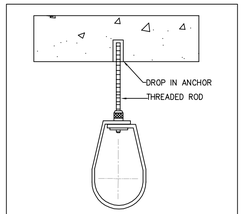

ADJUSTABLE SWIVEL RING
NO SCALE

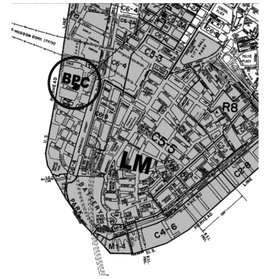

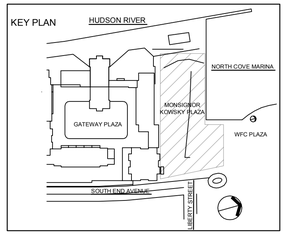

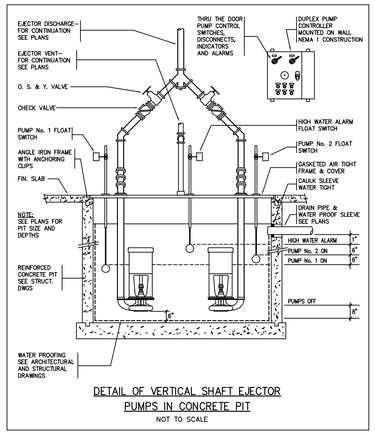

DETAIL OF VERTICAL SHAFT EJECTOR PUMPS IN CONCRETE PIT
NOT TO SCALE

PUMPS

PUMP CO / ABBREV. / STANCOR / • DESIGNATION	NO. REQUIRED	G.P.M. OR C.F.M.	T.D.H.	MODEL NO.	MECH. SEAL	STAGES	VERT. SPLIT	HORIZ. SPLIT	WORKING PRESS.	H.P.	R.P.M.	VOLTS	PHASE	CYCLE	MANUAL CONTROL	STARTING STEPS	AUTO CONTROL	PILOT LIGHT	PRESSURE GAUGE RANGE	CONTROL CENTER	EMERGENCY POWER			
PP-1 (STANCOR – SUMP PUMP)	2	65	20'	2"SSS-100	•				150	1	3500	208	3	60			•	•		•	•			
PP-2 (STANCOR – SUMP PUMP)	3																							

ALTERATIONS OR ADDITIONS TO THIS ENGINEERING DOCUMENT BY AN UNLICENSED PERSON IS A VIOLATION OF CHAPTER 16, TITLE VIII, ARTICLE 145 § 7209.2 OF THE NEW YORK STATE EDUCATION LAW.

* THIS PLAN APPROVED ONLY FOR WORK INDICATED ON THE APPLICATION SPECIFICATION SHEET. ALL OTHER MATTERS SHOWN ARE NOT TO BE RELIED UPON, OR TO BE CONSIDERED AS EITHER BEING APPROVED OR IN ACCORDANCE WITH

hMa
hanrahan Meyers architect,llp

ARCHITECT:
HANRAHAN MEYERS ARCHITECTS, LLP
6 MAIDEN LANE SUITE 510
NEW YORK, NY 10038
T: (212) 989-6026 F: (917) 591-9825

Cosentini

MEP ENGINEERS:
Cosentini Associates
Two Pennsylvania Plaza - Third Floor
NEW YORK, NY 10121
T: (212) 615-3760 F: (212) 615-3600

Thornton Tomasetti

STRUCTURAL ENGINEERS:
Thornton Tomasetti
51 Madison Avenue
NEW YORK, NY 10010
T: (917) 661-7800 F: (917) 661-7801

EKLA PLLC

LANDSCAPE ARCHITECTS:
Elizabeth Kennedy Landscape Architect, PLLC
Brooklyn Navy Yard Building 275 Room 202
63 Flushing Avenue Unit 264
BROOKLYN, NY 11205
T: (718) 569-8837 F: (718) 709-5885

PROJECT:

Kowsky Plaza Repair

401 South End Avenue
New York, NY 10280

PROPERTY INFORMATION:

NOTES:

Rev No.	Description	Date
	BID SET	11.15.15

DOB STAMPS AND SIGNATURE:

SEAL AND SIGNATURE:

DATE:

DRAWN BY: BN

CHECKED BY: NR

SHEET TITLE:

PLUMBING SYMBOL LIST, NOTES AND SPECIFICATIONS

PAGE OF

SHEET NUMBER:

P-001.00

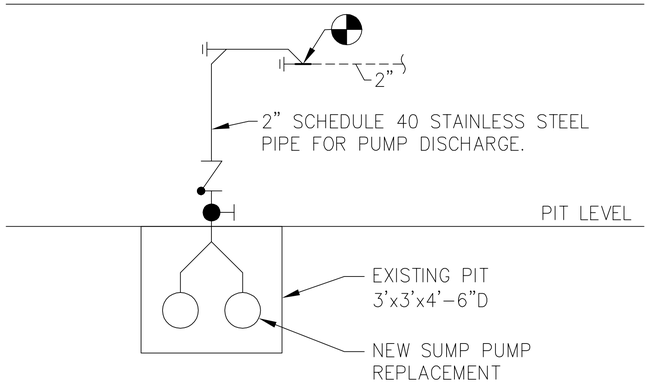

1 POLICE MEMORIAL PLAZA VAULT - RISER DIAGRAM

SCALE: NTS

SPECIFICATIONS: BRACKISH WATER SUMP PUMP SYSTEM

Provide a duplex brackish water sump pump system for installation in a concrete pit. The pumps shall be Stancor Model 2"SSS-100, totally submersible, heavy duty pumps in 304 stainless steel construction with double mechanical seals. Each pump shall be rated for 65 GPM at 20' TDH (minimum shutoff head at no flow shall be 50' with 1 HP, 3500 RPM, 208 volts, 3 phase, 60 Hz totally submersible motor with Class F insulation. Pumps with and controls shall be a FleetWay SubRig preassembled package, as furnished by GA Fleet Associates / Fleet Pump & Service of Harrison, NY.

Pump controls shall provide for automatic lead, lag pump operation, PAL alternation and alarms. Controls shall include a NEMA 4, UL Listed, panel with circuit breaker disconnect switches; Revere FW (FleetWay) Series Logic Controller with graphical HMI color touch screen for status, level adjustment, pump exercising, level simulation testing, data logging; across-the-line motor starters; control transformers; H-O-A selector switches; audible alarm with common alarm contacts; analog output signal and BMS communications; level transducer with back-up float switches; and 304 stainless steel FPS-DJB, NEMA 4, double junction box, environmentally sealed to prevent the intrusion of corrosive sewer gases and humidity to the electrical connections and the pump control panel.

SubRig prefabricated packaged system consisting of corrosion resistant epoxy coated full port self-cleaning ball check valves and full port fused Teflon ball isolation valves, color coded, grooved, interconnecting 304 stainless steel discharge pipe and fittings terminating in a true Y connection. Discharge piping shall include a blowdown line and individual pump test ports with ball valves. The SubRig shall also contain all necessary installation hardware including: 304 stainless steel pump base, anchor bolts and lifting chain. The SubRig shall be designed such that permanent fastening of the assembly is the last step of the installation assuring that the pumps will be correctly aligned with the cover. SubRig piping shall be broken down for shipment and color coded for ease of installation. The system shall include a 304 stainless steel open grating cover with gas spring assisted hinged hatch for a 48" square concrete pit.

The Pump Manufacturer's Representative shall have single source responsibility for the pumps and complete control system. Start_up services including adjustment and field calibration of controls, operator instruction, one (1) year warranty and service contract and system warranty shall be included in the price for the system.

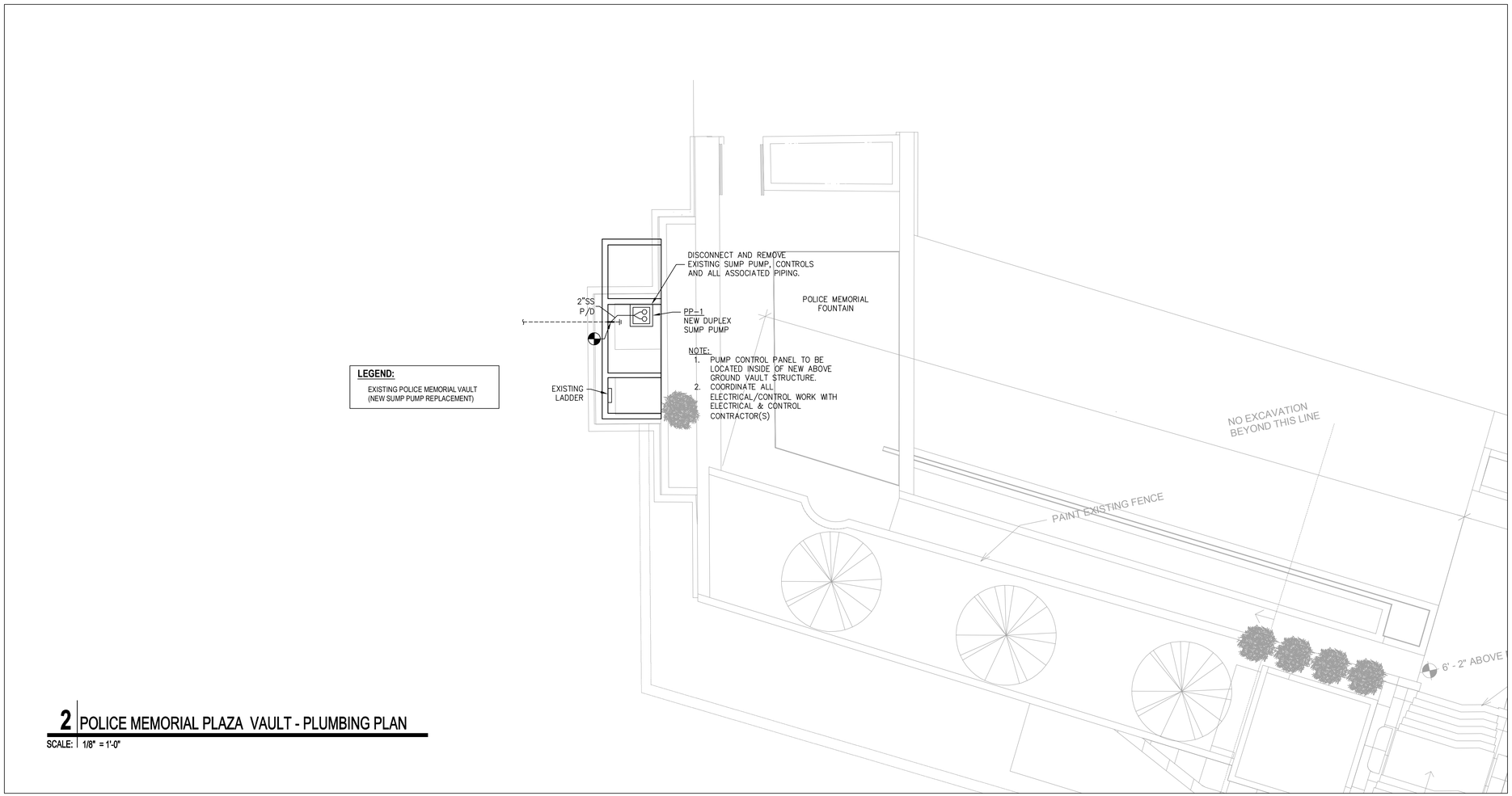

2 POLICE MEMORIAL PLAZA VAULT - PLUMBING PLAN

SCALE: 1/8" = 1'-0"

ALTERATIONS OR ADDITIONS TO THIS ENGINEERING DOCUMENT BY AN UNLICENSED PERSON IS A VIOLATION OF CHAPTER 16, TITLE VIII, ARTICLE 145 § 7209.2 OF THE NEW YORK STATE EDUCATION LAW.

* THIS PLAN APPROVED ONLY FOR WORK INDICATED ON THE APPLICATION SPECIFICATION SHEET. ALL OTHER MATTERS SHOWN ARE NOT TO BE RELIED UPON, OR TO BE CONSIDERED AS EITHER BEING APPROVED OR IN ACCORDANCE WITH

hMa
hanrahan Meyers architect,llp

ARCHITECT:
HANRAHAN MEYERS ARCHITECTS, LLP
6 MAIDEN LANE SUITE 510
NEW YORK, NY 10038
T: (212) 989-6026 F: (917) 591-9825

Cosentini

MEP ENGINEERS:
Cosentini Associates
Two Pennsylvania Plaza - Third Floor
NEW YORK, NY 10121
T: (212) 615-3760 F: (212) 615-3600

Thornton Tomasetti

STRUCTURAL ENGINEERS:
Thornton Tomasetti
51 Madison Avenue
NEW YORK, NY 10010
T: (917) 661-7800 F: (917) 661-7801

EKLA PLLC

LANDSCAPE ARCHITECTS:
Elizabeth Kennedy Landscape Architect, PLLC
Brooklyn Navy Yard Building 275 Room 202
63 Flushing Avenue Unit 264
BROOKLYN, NY 11205
T: (718) 569-8637 F: (718) 709-5885

PROJECT:

Kowsky Plaza Repair

401 South End Avenue
New York, NY 10280

PROPERTY INFORMATION:

NOTES:

Rev No.	Description	Date
	BID SET	11.15.15

DOB STAMPS AND SIGNATURE:

SEAL AND SIGNATURE:

DATE:

DRAWN BY: BN

CHECKED BY: NR

SHEET TITLE:
PLUMBING WORK IN CONNECTION WITH POLICE MEMORIAL PLAZA PUMPS AND CONTROLLERS RELOCATION

SHEET NUMBER:

P-300.00

PLOTTED BY MARTIN, BENJAMIN
FILE NAME I:\140143\Plan\140143 P-300.dwg SAVED ON 11/24/2015 3:35 PM PLOTTED ON 11/24/2015 3:44 PM

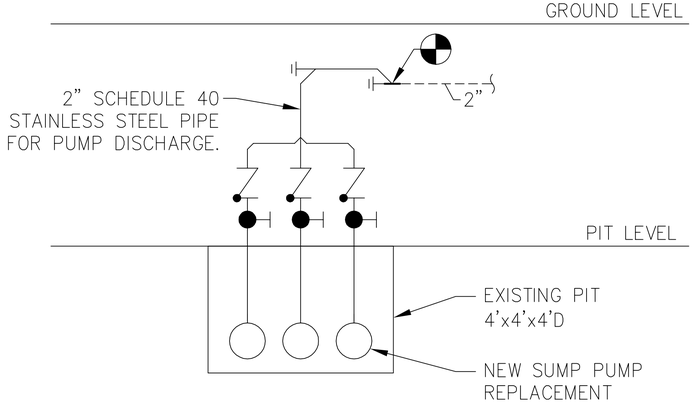

1 SOUTH UTILITY VAULT - RISER DIAGRAM

SCALE: NTS

SPECIFICATIONS: BRACKISH WATER SUMP PUMP SYSTEM

Provide a duplex brackish water sump pump system for installation in a concrete pit. The pumps shall be Stancor Model 2"SSS-100, totally submersible, heavy duty pumps in 304 stainless steel construction with double mechanical seals. Each pump shall be rated for 65 GPM at 20' TDH (minimum shutoff head at no flow shall be 50' with 1 HP, 3500 RPM, 208 volts, 3 phase, 60 Hz totally submersible motor with Class F insulation. Pumps with and controls shall be a FleetWay SubRig preassembled package, as furnished by GA Fleet Associates / Fleet Pump & Service of Harrison, NY.

Pump controls shall provide for automatic lead, lag pump operation, PAL alternation and alarms. Controls shall include a NEMA 4, UL Listed, panel with circuit breaker disconnect switches; Revere FW (FleetWay) Series Logic Controller with graphical HMI color touch screen for status, level adjustment, pump exercising, level simulation testing, data logging; across-the-line motor starters; control transformers; H-O-A selector switches; audible alarm with common alarm contacts; analog output signal and BMS communications; level transducer with back-up float switches; and 304 stainless steel FPS-DJB, NEMA 4, double junction box, environmentally sealed to prevent the intrusion of corrosive sewer gases and humidity to the electrical connections and the pump control panel.

SubRig prefabricated packaged system consisting of corrosion resistant epoxy coated full port self-cleaning ball check valves and full port fused Teflon ball isolation valves, color coded, grooved, interconnecting 304 stainless steel discharge pipe and fittings terminating in a true Y connection. Discharge piping shall include a blowdown line and individual pump test ports with ball valves. The SubRig shall also contain all necessary installation hardware including: 304 stainless steel pump base, anchor bolts and lifting chain. The SubRig shall be designed such that permanent fastening of the assembly is the last step of the installation assuring that the pumps will be correctly aligned with the cover. SubRig piping shall be broken down for shipment and color coded for ease of installation. The system shall include a 304 stainless steel open grating cover with gas spring assisted hinged hatch for a 48" square concrete pit.

The Pump Manufacturer's Representative shall have single source responsibility for the pumps and complete control system. Start_up services including adjustment and field calibration of controls, operator instruction, one (1) year warranty and service contract and system warranty shall be included in the price for the system.

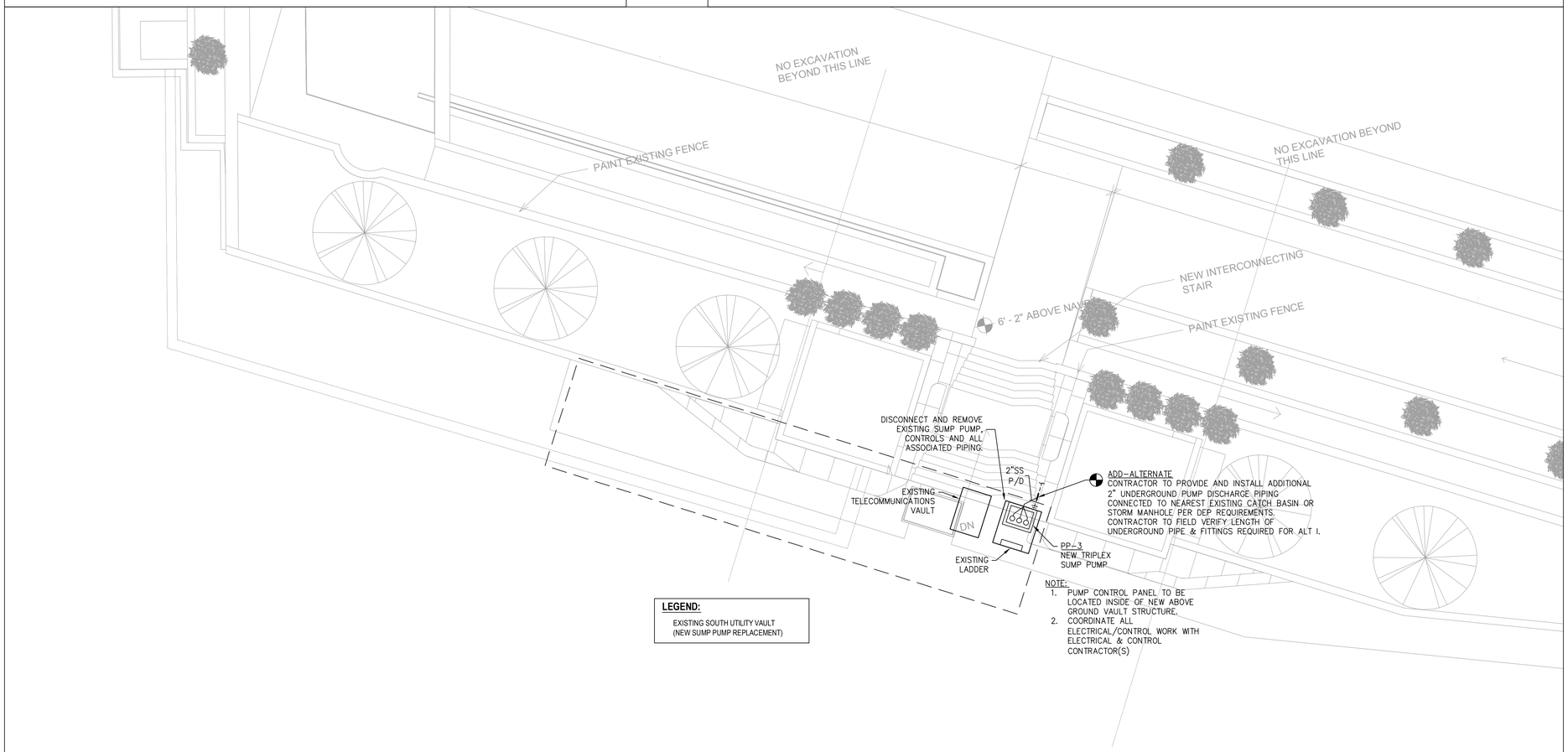

2 SOUTH UTILITY VAULT - PLUMBING PLAN

SCALE: 1/8" = 1'-0"

ALTERATIONS OR ADDITIONS TO THIS ENGINEERING DOCUMENT BY AN UNLICENSED PERSON IS A VIOLATION OF CHAPTER 16, TITLE VIII, ARTICLE 145 § 7209.2 OF THE NEW YORK STATE EDUCATION LAW.

* THIS PLAN APPROVED ONLY FOR WORK INDICATED ON THE APPLICATION SPECIFICATION SHEET. ALL OTHER MATTERS SHOWN ARE NOT TO BE RELIED UPON, OR TO BE CONSIDERED AS EITHER BEING APPROVED OR IN ACCORDANCE WITH

hMa
hanrahan Meyers architect,llp

ARCHITECT:
HANRAHAN MEYERS ARCHITECTS, LLP
6 MAIDEN LANE SUITE 510
NEW YORK, NY 10038
T: (212) 989-6026 F: (917) 591-9825

Cosentini

MEP ENGINEERS:
Cosentini Associates
Two Pennsylvania Plaza - Third Floor
NEW YORK, NY 10121
T: (212) 615-3760 F: (212) 615-3600

Thornton Tomasetti

STRUCTURAL ENGINEERS:
Thornton Tomasetti
51 Madison Avenue
NEW YORK, NY 10010
T: (917) 661-7800 F: (917) 661-7801

EKA PLLC

LANDSCAPE ARCHITECTS:
Elizabeth Kennedy Landscape Architect, PLLC
Brooklyn Navy Yard Building 275 Room 202
63 Flushing Avenue Unit 264
BROOKLYN, NY 11205
T: (718) 569-8637 F: (718) 709-5885

PROJECT:

Kowsky Plaza
Repair

401 South End Avenue
New York, NY 10280

PROPERTY INFORMATION:

NOTES:

Rev No.	Description	Date
	BID SET	11.15.15

DOB STAMPS AND SIGNATURE:

SEAL AND SIGNATURE:

DATE:

DRAWN BY: BN

CHECKED BY: NR

SHEET TITLE:
PLUMBING WORK IN CONNECTION WITH POLICE MEMORIAL PLAZA PUMPS AND CONTROLLERS RELOCATION

SHEET NUMBER:

P-301.00

FILE NAME I:\140143\Plum\140143 P-301.dwg SAVED DN 11/24/2015 3:35 PM PLOTTED DN 11/24/2015 3:44 PM PLOTTED BY MARTIN, BENJAMIN

SUPPLEMENTAL ELECTRICAL SPECIFICATION:

1. THE WORK OF THIS DIVISION SHALL INCLUDE ALL LABOR, MATERIALS AND APPARATUS NECESSARY FOR THE COMPLETION OF ALL ELECTRICAL WORK AS SHOWN ON THE DRAWINGS AND AS HEREINAFTER SPECIFIED, LEFT READY FOR SATISFACTORY OPERATION.
   THE WORK OF THIS DIVISION SHALL BE PERFORMED IN COMPLIANCE WITH NYC ELECTRICAL CODE, BUILDING CODE, AND ALL APPLICABLE CODES, AND LOCAL RULES AND REGULATIONS.

2. ANY APPLIANCE, MATERIALS OR LABOR THAT ARE OBVIOUSLY A PART OF THE ELECTRICAL WORK NECESSARY TO ITS PROPER PERFORMANCE, ALTHOUGH NOT SPECIFICALLY MENTIONED HEREIN OR SHOWN ON THE DRAWINGS, SHALL BE FURNISHED AND INSTALLED AS IF CALLED FOR IN DETAIL WITHOUT ADDITIONAL COST.

3. WITHOUT INTENDING TO LIMIT AND/OR RESTRICT THE VOLUME OF WORK REQUIRED AND SOLELY FOR THE CONVENIENCE OF THE CONTRACTOR, THE WORK OF THIS DIVISION SHALL, IN GENERAL COMPRISE THE FOLLOWING:
   A. COMPLETE LIGHT AND POWER BRANCH WIRING, INCLUDING NEW PANELS AS REQUIRED.
   B. LIGHTING FIXTURES AND LAMPS.
   C. CONNECTION TO ALL ELECTRICAL, MECHANICAL, PLUMBING EQUIPMENT FURNISHED BY OTHER TRADES OR BY THE OWNER.
   D. CONNECTION OF NEW AC UNITS/EXHAUST FAN AND ASSOCIATED CONTROLS.
   E. CONFORMING TO ALL EXISTING CONDITIONS AT THE SITE.
   F. TEMPORARY FACILITIES.
   G. REMOVALS AS REQUIRED.
   H. TELEPHONE WIRING, SIGNAL WIRING AND DEVICES.

WORK NOT INCLUDED

1. FURNISHING OF MOTORS AND CONTROL DEVICES.

SHOP DRAWINGS

SUBMIT TO ENGINEER COMPLETE SHOP DRAWINGS, CATALOG CUTS, WIRING DIAGRAMS AND ASSOCIATED DATA, FOR ALL MAJOR ELEMENTS OF THE ELECTRICAL WORK FOR REVIEW, CHECKING AND APPROVAL. NO EQUIPMENT SHALL BE FABRICATED, DELIVERED, ERECTED OR RECONNECTED OTHER THAN FROM DRAWINGS APPROVED BY THE ENGINEER. SHOP DRAWINGS IN THE NUMBER DIRECTED SHALL BE SUBMITTED FOR NOT LESS THAN THE FOLLOWING:

1. PANELBOARDS AND CABINETS.
2. LIGHTING FIXTURES.
3. WIRING DEVICES AND PLATES.
4. SPECIAL SYSTEMS & EQUIPMENT AS INDICATED ON DRAWINGS.

IT SHALL BE UNDERSTOOD THAT APPROVAL OF DRAWINGS WILL NOT BIND THE ENGINEER OR THE OWNER TO THE FINAL ACCEPTANCE OF SUCH EQUIPMENT AS THE COMPLETED INSTALLATION AND TEST OF EQUIPMENT AS A WHOLE MUST BE PROVIDED AND GUARANTEED HEREIN AS SPECIFIED.

MATERIALS

1. GENERAL
   A. ELECTRIC RACEWAY AND SUPPORTING SYSTEMS SHALL BE FURNISHED AND INSTALLED COMPLETE, WITH ALL MATERIALS, FITTINGS, CONNECTIONS AND ACCESSORIES NECESSARY TO PROVIDE IN EACH INSTANCE, A COMPLETE OPERATING INSTALLATION, AS DESCRIBED HEREIN, AND INDICATED ON THE DRAWINGS, AND/OR AS APPROVED BY BUILDING OWNER.
   B. THE DRAWINGS ARE DIAGRAMMATIC AND GENERALLY INDICATIVE OF THE WORK TO BE INSTALLED, BUT DO NOT SHOW ALL BENDS, FITTINGS, AND BOXES WHICH MAY BE REQUIRED. THE CONTRACTOR SHALL CAREFULLY INVESTIGATE THE JOB CONDITIONS INCLUDING STRUCTURAL AND FINISH CONDITIONS AFFECTING ALL HIS WORK AND ARRANGE SAME ACCORDINGLY, FURNISHING SUCH FITTINGS, BOXES AND SIMILAR ITEMS AS MAY BE REQUIRED TO MEET SUCH CONDITIONS.

2. WIRING
   A. ALL WIRE AND CABLE, AS INDICATED, SPECIFIED OR REQUIRED, SHALL BE INSTALLED COMPLETE, INCLUDING ALL NECESSARY SPLICES AND CONNECTIONS TO EQUIPMENT DEVICES.
   B. ALL WIRE SHALL BE COPPER OF NO LESS THAN 98% CONDUCTIVITY. NO. 8 WIRE AND LARGER SHALL BE SINGLE CONDUCTOR STRANDED WITH 600 VOLT TYPE THW POLYVINYLCHLORIDE INSULATION. NO. 10 WIRE AND SMALLER SHALL BE SOLID.
   C. WIRE AND CABLE SHALL BE NO. 12 AWG MINIMUM, UNLESS OTHERWISE INDICATED OR SPECIFIED.
   D. CONDUCTORS OPERATING IN THE RANGE OF 100 TO 250 VOLTS TO NEUTRAL AND EXTENDING IN EXCESS OF 75 FEET FROM THE POINT OF SUPPLY TO THE FIRST OUTLET SHALL BE #10 AWG COPPER TO THE FIRST OUTLET.
   E. BRANCH CIRCUIT NUMBERS INDICATED ON THE DRAWINGS ON MULTI-CIRCUIT HOMERUNS ARE FOR IDENTIFICATION OF DEVICES OR EQUIPMENT THEY ARE CONNECTED TO AND DO NOT NECESSARILY REFER TO PANELBOARD CIRCUIT NUMBERS. ASSIGNMENT OF BRANCH CIRCUIT NUMBERS SHALL BE PART OF THIS WORK AND INDICATED ON PANEL DIRECTORIES. BRANCH CIRCUITS SHALL BE CONNECTED TO CIRCUITS ON PANELBOARDS SO AS TO SECURE A REASONABLE BALANCE ON THE THREE PHASES. WHERE MORE THAN ONE CIRCUIT, WITH A COMMON NEUTRAL IS INSTALLED IN THE SAME CONDUIT, EACH PHASE WIRE SHALL BE CONNECTED TO A DIFFERENT LEG OF THE SYSTEM.
   F. ALL CONDUCTORS SHALL BE COLOR CODED THROUGHOUT AND NUMBERED AND TAGGED AT EACH JUNCTION BOX, PULL BOX, PANEL AND DEVICE WITH SUITABLE FIREPROOF TAGS OR ADHESIVE IDENTIFICATION BANDS.
   G. ALL CIRCUITS, BUT BALANCED THREE PHASE, THREE WIRE LOADS, SHALL BE PROVIDED WITH DEDICATED NEUTRAL.

2A. CONNECTORS AND SPLICES
   PROVIDE FACTORY-FABRICATED CONNECTORS AND SPLICES OF SIZE, AMPACITY RATING, MATERIAL, TYPE, AND CLASS FOR APPLICATION AND SERVICE INDICATED. ALL SPLICES INSIDE VAULTS SHALL BE SUITABLE FOR MARINE TYPE ENVIRONMENT ANY SUITABLE FOR PROLONGED SUBMERSION IN SALTY WATER.
   IN GENERAL, CABLE AMPACITIES ARE BASED ON A 60 DEGREE C RATING FOR CABLES #1 AWG AND SMALLER AND ON A 75 DEGREE C RATING FOR LARGER CABLES. CONNECTORS, SPLICES AND TERMINATIONS MATERIALS SHALL MEET THE SAME RATING AS THE CONDUCTORS.

3. CONDUIT
   A. EXCEPT AS OTHERWISE INDICATED OR SPECIFIED, ALL WIRING INSIDE VAULT AND NEW UTILITY STRUCTURES SHALL BE INSTALLED IN FULL WEIGHT PVC COATED RIGID GALVANIZED STEEL CONDUIT.
   B. LIQUIDTIGHT FLEXIBLE, GALVANIZED STEEL CONDUIT, WITH CONTINUOUS COPPER BONDING CONDUCTOR, SHALL BE USED FOR CONNECTIONS, NOT EXCEEDING 18" IN LENGTH, TO MOTORS AND AT OTHER LOCATIONS WHERE VIBRATION,MOVEMENT OR OIL VAPOR ATMOSPHERES ARE ENCOUNTERED.
   C. CONDUIT AND FITTINGS SHALL CONFORM TO LATEST ACCEPTABLE NEW YORK CITY CODE AND ALL OTHER CODES HAVING JURISDICTION.
   D. CONDUIT SHALL BE 3/4" TRADE SIZE MINIMUM, UNLESS OTHERWISE INDICATED OR SPECIFIED.
   E. ALL CONDUITS WHICH ARE TO REMAIN EMPTY FOR FUTURE INTRODUCTION OF CONDUCTORS SHALL BE PROVIDED WITH A #12 NYLON DRAG WIRE WITH IDENTIFICATION TAG AT BOTH ENDS.
   F. ALL ENTRANCE TO COPNDUITS SHALL BE SEALED & WATERPROOFED.

4. JUNCTION BOXES
   A. JUNCTION BOX AND PULL BOXES SUITABLE FOR PROLONGED SUBMERSION IN SALTY WATER (NEMA 6P) SHALL BE PROVIDED WHERE INDICATED OR SPECIFIED AND WHERE NECESSARY TO FACILITATE THE INSTALLATION OF EQUIPMENT OR WIRING.

5. OUTLET BOXES
   A. EACH OUTLET FOR LIGHTING FIXTURE, WALL SWITCH, WALL RECEPTACLE, TELEPHONE OR OTHER USE SHALL BE PROVIDED WITH AN OUTLET BOX SUITABLE FOR THE USE FOR WHICH THE OUTLET IS TO BE PUT AND TO THE LOCATION IN WHICH IT OCCURS, SECURED FIRMLY IN PLACE AND SET TRUE AND SQUARE WITH THE FINISHED SURFACE.
   B. CONNECTION TO RECESSED CEILING FIXTURES SUPPLIED WITH PIGTAILS MAY BE ARRANGED SO THAT MORE THAN ONE BUT NOT MORE THAN FOUR, SUCH FIXTURES ARE CONNECTED INTO A SINGLE OUTLET BOX. NO FIXTURE SHALL BE SUPPLIED FROM AN OUTLET IN ANOTHER ROOM.
   C. PANEL AND CIRCUIT NUMBER SHALL BE PERMANENTLY IDENTIFIED INSIDE EACH OUTLET BOX AND ON OUTSIDE COVERS.

6. FASTENINGS, SUPPORTS AND HANGERS
   A. ALL PARTS OF THE ELECTRICAL INSTALLATION SHALL BE ADEQUATELY SUPPORTED FROM THE BUILDING CONSTRUCTION USING APPROVED CLAMP SCREWS WITH INSERTS OR EXPANSION ANCHORS, EXPANSION BOLTS AND TOGGLE BOLTS "IN NO CASE SHALL THE HUNG CEILING MEMBERS OR WIRES BE USED TO SUPPORT CONDUIT".
   B. ALL FASTENINGS, SUPPORTS, CLAMPS, ANCHORS, AND SIMILAR ITEMS SHALL BE OF TYPE SUITABLE FOR THE PURPOSE.

7. WIRING DEVICES
   ALL DEVICES SHALL BE SPECIFICATION GRADE, U.L. APPROVED.
   A. SINGLE POLE SWITCH, 20 AMP, 120 VOLT.
   B. 3 WAY SWITCH, 20 AMP, 120 VOLT, QUIET TYPE.
   C. RECEPTACLE, 20 AMP. 2 POLE, 3 WIRE DUPLEX 125 VOLT GRD. TYPE.
   D. RECEPTACLE, RATED 30 AMP. AND ABOVE ARE SPECIAL PURPOSE OUTLETS AND SHALL BE FURNISHED AS SPECIFIED ON DRAWINGS.

8. PANELBOARD AND CABINETS
   A. CIRCUIT PROTECTIVE DEVICES SHALL BE BOLT ON CIRCUIT BREAKERS. MAIN BUS BARS INCLUDING FULL CAPACITY NEUTRAL WHERE INDICATED SHALL HAVE AN AMPERE RATING NOT LESS THAN THAT OF THE MAIN BREAKER OR LUGS.
   B. DISTRIBUTION EQUIPMENT SHALL BE BRACED TO WITHSTAND THE AVAILABLE SHORT CIRCUIT CURRENT.

9. CIRCUIT BREAKERS
   A. CIRCUIT BREAKERS FOR PANEL OR INDIVIDUAL MOUNTING SHALL BE MOLDED CASE TYPE, QUICK MAKE, QUICK BREAK ON MANUAL OR AUTOMATIC OPERATION.
   B. AMPERE RATING AND NUMBER OF POLES SHALL BE AS INDICATED ON THE DRAWINGS.
   C. CIRCUIT BREAKERS SHALL BE AS RECOMMENDED BY PANEL MANUFACTURER AND COMPATIBLE WITH THE PANEL. MINIMUM CIRCUIT BREAKER INTERRUPTING CAPACITY SHALL BE 22,000 SYM RMS AMPERES.
   D. NEW CIRCUIT BREAKERS DESIGNATED FOR INSTALLATION IN EXISTING PANELS SHALL BE OF THE SAME TYPE, MAKE AND SHORT CIRCUIT INTERRUPTING CAPACITY AS EXISTING C.B.'S.
   E. ALL CIRCUIT BREAKERS SHALL BE FULLY RATED FOR THE LOAD

10. SAFETY SWITCHES
   A. SAFETY SWITCHES SHALL BE OF SIZE NOTED ON THE DRAWINGS, OR AS REQUIRED, FUSIBLE OR NON-FUSIBLE AND EACH CONTAINED IN A GENERAL PURPOSE ENCLOSURE. ALL SWITCHES SHALL BE HEAVY DUTY TYPE AND SHALL HAVE QUICK MAKE, QUICK BREAK MECHANISM.
   AND ABLE TO WITHSTAND 100% OF AVAILABLE SHORT CIRCUIT (AIC).
   B. ALL SWITCHES SHALL BE OF PROPER HORSEPOWER RATING AS APPLICABLE AND HAVE DUAL INTERLOCKS DESIGNED TO INTERLOCK THE SWITCH BOX DOOR WITH THE SWITCH OPERATING MECHANISM.

11. FUSES
   EXCEPT AS OTHERWISE SPECIFIED, A CARTRIDGE OR PLUG FUSE SHALL BE INSTALLED IN EACH FUSE GAP IN THE WORK. FUSES SHALL BE DUAL ELEMENT NON-RENEWABLE TYPE.
   FUSE SHALL BE SELECTED IN A MANNER TO PROVIDE COORDINATION WITH UPSTREAM AND DOWNSTREAM PROTECTIVE DEVICES.

12. GROUNDING
   A. ALL ENCLOSURES AND OTHER NON CURRENT CARRYING METALLIC PARTS OF ELECTRICAL EQUIPMENT, RACEWAY SYSTEMS AND EQUIPMENT GROUND BUSES SHALL BE EFFECTIVELY GROUNDED TO THE BUILDING GROUNDING SYSTEMS THROUGH THE SYSTEM GROUND CONDUCTORS, METALLIC CONDUITS AND OTHER RACEWAYS AND ENCLOSURES FOR CONDUCTORS SHALL BE METALLICALLY JOINED TOGETHER INTO A CONTINUOUS ELECTRICAL CONDUCTOR, AS TO PROVIDE EFFECTIVE ELECTRICAL CONTINUITY.
   B. EQUIPMENT LOCATED REMOTELY FROM THE GROUND CONDUCTORS SHALL BE GROUNDED TO THE NEAREST AVAILABLE COLD WATER PIPING, MOTOR FRAMES SHALL BE GROUNDED THROUGH THEIR CONDUITS.

13. LIGHTING FIXTURES
   A. ALL LIGHTING FIXTURES SHALL COMPLY WITH N.Y.C. ELECTRICAL CODE AND SHALL BE U.L. LISTED.
   B. ALL LIGHTING FIXTURES SHALL BE APPROVED PRIOR TO PURCHASE.
   C. ALL LIGHTING FIXTURES SHALL BE FURNISHED AND INSTALLED COMPLETE, WITH NECESSARY COMPONENTS, ACCESSORIES AND LAMPS OF CORRECT TYPE AND RATING, AS INDICATED ON ARCHITECT DRAWINGS.
   D. FIXTURES SHALL BE CAREFULLY SUPPORTED AND ALIGNED WITH NECESSARY HANGERS, SUPPORTING MEMBERS AND PLASTER FRAMES FOR PROPER INSTALLATION, ALL AS REQUIRED AND AS APPROVED.
   E. ALL FIXTURES SHALL BE PROPERLY WIRED AND CONNECTED TO BRANCH CIRCUITS, TESTED AND LEFT READY FOR OPERATION.
   F. FOR TYPE, MAKE AND QUANTITIES OF LIGHTING FIXTURES REQUIRED SEE CONTRACT DRAWINGS AND SPECIFICATIONS.
   G. FIXTURES AND/OR FIXTURE OUTLET BOXES SHALL BE PROVIDED WITH HANGERS TO ADEQUATELY SUPPORT THE COMPLETE WEIGHT OF THE FIXTURE. THESE HANGERS SHALL BE INDEPENDENT OF THE CEILING GRID. THE CEILING GRID WILL NOT BE ACCEPTED AS A SUPPORT MEANS.

13A. LAMPS AND BALLASTS
   A. CONFORM TO THE ANSI C78 SERIES THAT IS APPLICABLE TO EACH TYPE OF LAMP.
   B. EACH FLUORESCENT LAMP SHALL CONFORM WITH LEED. PROVIDE LOW MERCURRY TYPE FLUORESCENT LAMPS.
   C. PROVIDE BALLASTS AS INDICATED ON LIGHTING FIXTURES SCHEDULE.

14. INSTALLATION
   A. ALL ELECTRICAL WORK TO BE PERFORMED SHALL COMPLY WITH THE LATEST N.Y.C. ELECTRICAL CODE AND ALL OTHER CODES HAVING JURISDICTION.
   B. CONTRACTOR SHALL CHECK ALL EXISTING CONDITIONS IN THE FIELD, RELOCATE ALL EXISTING WIRING WHICH INTERFERES WITH NEW INSTALLATION AND MUST BE MAINTAINED.
   C. ANY NECESSARY SERVICE SHUTDOWN SHALL BE AT A TIME & DATE CONVENIENT TO THE UTILITY VAULT OWNER AND AFTER SUFFICIENT TIME HAS BEEN GIVEN HIS APPROVAL OBTAINED.
   D. ELECTRICAL CONTRACTOR SHALL FURNISH AND INSTALL ALL ADDITIONAL CONDUITS, CABLES AND PULL BOXES AS REQUIRED FOR ROUTING AND EXTENDING OF CONDUITS AND CABLES FOR MARINA FEEDERS.
   E. ALL PENETRATIONS THROUGH SLABS AND FIRE RATED PARTITIONS SHALL BE FIRE STOPPED USING APPROVED METHOD TO MAINTAIN THE FIRE RESISTANCE RATING.
   F. ELECTRICAL CONTRACTOR SHALL FILE AND OBTAIN ELECTRICAL SIGN OFF – CERTIFICATE FROM THE DEPARTMENT OF BUILDINGS ELECTRICAL DIVISION.
   G. LOCATION OF ALL ELECTRICAL EQUIPMENT IS APPROXIMATE, EXACT LOCATION TO BE VERIFIED IN THE FIELD.

15. EXISTING ELECTRICAL WORK
   THE PREMISES OF THE PROJECT CONTAINS EXISTING ELECTRICAL INSTALLATIONS.
   A. EXCEPT FOR ITEMS SPECIFICALLY INDICATED AS BEING REUSED, COMPLETELY ABANDON EXISTING ELECTRICAL WORK BY:
   - DE-ENERGIZING IT AND/OR CUTTING IT LOOSE FROM EVERY LIVE SOURCE.
   - CUTTING AWAY ALL EXPOSED PORTIONS AND ANY CONCEALED PORTIONS WHICH CREATE INTERFERENCES WITH THE NEW INSTALLATIONS OF THE VARIOUS TRADES WORKING AT THE PROJECT.
   - REMOVING ALL EXISTING WIRES AND CABLES FROM EXISTING RACEWAYS WHICH REMAIN.
   B. EXCEPT WHERE IT IS INTEGRATED INTO A NEW INSTALLATION, MAINTAIN ALL EXISTING ELECTRICAL WORK OPERATING AND INTACT BY INCLUDING ALL PROCEDURES AND MATERIALS NECESSARY TO:
   - MAINTAIN THE ACCESSIBILITY AND FUNCTIONALITY OF ALL POWER AND TEL. CONNECTION FOR BOATS AT THE MARINA.
   OUTLETS, JUNCTION BOXES, PULL BOXES, WIRING DEVICES, PANELS, SWITCHBOARD, FIXTURES AND THE LIKE, THAT MAY BE COVERED OVER OR INTERFERED WITH BY THE NEW CONSTRUCTION WORK OF ALL TRADES.
   - MAINTAIN CONTINUITY IN THE EXISTING LIGHT AND POWER CIRCUITRY, COMMUNICATIONS AND SIGNAL CIRCUITRY OR OTHER ELECTRIC RUNS FOR THE MARINA, WHICH MUST BE DISRUPTED TO ALLOW THE NEW WORK OF ALL TRADES TO PROCEED.
   - CUT BACK AND TERMINATE AT ACCESSIBLE POINTS, IN A SAFE MANNER, ALL LIVE WIRING MADE UNNECESSARY OR OBSOLETE BY THE NEW CONSTRUCTION WORK OF ALL TRADES.
   C. PORTION OF EXISTING ELECTRICAL INSTALLATIONS SHALL BE REUSED AND RELOCATED TO NEW UTILITY STRUCTURES TO MAKE UP ANY OF THE REQUIRED WORK EXCEPT AS FOLLOWS:
   - EQUIPMENT AND DEVICES, AS SPECIFICALLY INDICATED.
   - RACEWAYS (WITH ASSOCIATED JUNCTION BOXES AND PULL BOXES) ONLY FOR FEEDERS AS SPECIFICALLY INDICATED.
   - RACEWAYS (WITH ASSOCIATED JUNCTION BOXES AND PULL BOXES) AND CABLES FOR FEEDERS AS SPECIFICALLY INDICATED.
   D. SPECIFICATIONS PERTAINING TO EQUIPMENT AND DEVICES, HEREINAFTER INCLUDED, APPLY TO NEW WORK. WHERE IT IS REQUIRED THAT ITEMS BE MADE UP WITH COMPONENTS WHICH ARE BOTH NEW AND EXISTING, IT SHALL BE INTERPRETED THAT THE SPECIFICATIONS GOVERN ONLY AS THEY ARE APPLICABLE TO THE NEW COMPONENTS.
   E. SPECIFICATIONS PERTAINING TO WIRING METHODS, HEREINAFTER INCLUDED, APPLY ONLY TO THOSE PORTIONS OR ELEMENTS OF REQUIRED CIRCUITRY WHICH ARE SPECIFICALLY INDICATED AS BEING NEW OR FOR WHICH THE USE OF EXISTING MATERIALS IS NOT POSSIBLE.
   F. OUTAGES OF EXISTING ELECTRICAL SYSTEMS NECESSITATED BY THE NEW CONSTRUCTION WORK OF ALL TRADES SHALL BE IN ACCORDANCE WITH A SCHEDULE ISSUED IN THE FIELD BY THE ARCHITECT. INCLUDE ALL ELECTRICAL WORK, OVERTIME LABOR AND SUPERVISION NECESSARY TO ADHERE TO THIS SCHEDULE.
   G. ANY EXISTING ELECTRICAL WORK WHICH IS PULLED OUT OR CUT AWAY IN COMPLIANCE WITH THE ABOVE REQUIREMENTS SHALL BE REMOVED FROM THE SITE AS IF IT WERE RUBBISH.
   H. DURING DEMOLITION PROCEDURES, PROVIDE ALL NECESSARY PROTECTION FOR EXISTING ELECTRICAL WORK REQUIRED FOR REUSE.

16. BASIC REQUIREMENTS
   A. STUDY OTHER SECTIONS OF THE SPECIFICATIONS AND DRAWINGS. COOPERATE WITH OTHER TRADES. COORDINATE WORK TO AVOID INTERFERENCES. WHEN IN DOUBT, CONSULT ENGINEER BEFORE PROCEEDING WITH WORK.
   B. PERFORM ALL NECESSARY CUTTING AND PATCHING.
   C. OBTAIN PERMISSION OF ARCHITECT BEFORE CUTTING STRUCTURAL MEMBERS.
   D. NOTIFY ENGINEER OF CONFLICTS BETWEEN DRAWINGS AND SPECIFICATIONS BEFORE SPECIFICATIONS BEFORE BIDDING. THE ENGINEER'S DECISION WILL GOVERN EITHER BEFORE OR AFTER BIDDING.
   E. ELECTRICAL DRAWINGS ARE DIAGRAMMATIC EXCEPT WHERE DIMENSIONED. DO NOT SCALE. FOLLOW ARCHITECTURAL, STRUCTURAL AND MANUFACTURER'S SHOP DRAWINGS FOR GREATER ACCURACY. CONSULT ENGINEER IN CASE OF DOUBT OR CONFLICT. UNLESS NOTED, FIXED DIMENSIONS ARE BASED ON THE PRODUCT OF ONE MANUFACTURER, VERIFY DIMENSIONS WITH THE SHOP DRAWINGS OF THE MATERIALS ACTUALLY APPROVED OR PURCHASED.
   F. THE CONTRACTOR IS RESPONSIBLE FOR ANY ADDITIONAL COST AND DELAYS IN THE WORK RESULTING FROM SUBSTITUTION UNDER THIS DIVISION; INCLUDING, BUT NOT LIMITED TO, ANY CHANGES INDECISION, INSTALLATION, OR THE WORK OF OTHER TRADES.

17. IDENTIFICATION
   A. ELECTRICAL CONTRACTOR SHALL FURNISH AND INSTALL TYPE WRITTEN DIRECTORIES IN ALL NEW AND EXISTING PANELS INDICATING TYPE AND LOCATION OF LOAD BEING SERVED BY INDIVIDUAL CIRCUIT BREAKERS.
   B. ALL PARTS OF EQUIPMENT, SUCH AS PANELS, JUNCTION BOXES, SAFETY SWITCHES MOTOR STARTERS, CIRCUIT BREAKERS, AND SIMILAR ITEMS SHALL BE IDENTIFIED BY NAME, AT SUPPLY END, "LOAD SUPPLIED" AT LOAD END, "LOAD SUPPLIED FROM".

20. GUARANTEE
   ALL ELECTRICAL EQUIPMENT SHALL BE GUARANTEED FOR TWO (2) YEAR. ELECTRICAL CONTRACTOR SHALL OBTAIN ALL MANUFACTURER'S WARRANTIES AND GUARANTEES FOR ALL ELECTRICAL EQUIPMENT AND MATERIALS AND TURN SAME OVER TO OWNER.

21. TEMPORARY LIGHT AND POWER
   PROVIDE A TEMPORARY LIGHT AND POWER SYSTEM (AS PART OF THIS CONTRACT) ADEQUATE FOR THE REQUIREMENTS OF ALL TRADES DURING CONSTRUCTION. TEMPORARY SYSTEM SHALL BE DISCONNECTED AND REMOVED WHEN PERMANENT SERVICE IS IN OPERATION.

22. TEST
   PLACE ALL CIRCUITS AND EQUIPMENT INTO SERVICE UNDER NORMAL CONDITIONS, COLLECTIVELY AND SEPARATELY, AS MAY BE NECESSARY TO DETERMINE SATISFACTORY OPERATION. CERTAIN TESTS HEREINAFTER SPECIFIED MUST BE PERFORMED IN THE PRESENCE OF THE ENGINEER. FURNISH ALL INSTRUMENTS, WIRING, AND EQUIPMENT OPERATORS IN ACCORDANCE WITH REQUIREMENTS OF THE DRAWINGS AND SPECIFICATIONS.

23. INCLUDE BPC REPRESENTATIVE FOR ALL REQUIRED WITNESS TESTS.

GENERAL NOTES:

1. THE CONTRACTOR SHALL VISIT THE JOB SITE TO DETERMINE EXISTING CONDITIONS AND COMPARE SAME WITH DRAWINGS AND SPECIFICATIONS AND SATISFY HIMSELF OF ALL CONDITIONS PRIOR TO SUBMISSION OF A BID PROPOSAL. SUBMISSION OF A COST PROPOSAL (BID) WILL BE JUDGED AS EVIDENCE THAT SITE EXAMINATION HAS BEEN MADE. CLAIMS FOR EXTRA COST FOR LABOR, EQUIPMENT, OR MATERIALS REQUIRED, OR FOR DIFFICULTIES ENCOUNTERED WHICH COULD HAVE BEEN FORESEEN HAD SUCH EXAMINATION BEEN MADE WILL NOT BE RECOGNIZED.
2. THE DRAWINGS ARE DIAGRAMMATIC AND GENERALLY INDICATIVE OF THE WORK TO BE INSTALLED, BUT DO NOT SHOW ALL BENDS, FITTINGS AND BOXES WHICH MAY BE REQUIRED. CAREFULLY INVESTIGATE THE STRUCTURAL AND FINISH CONDITION AFFECTING THE WORK AND ARRANGE SAME ACCORDINGLY. FURNISH AND INSTALL SUCH FITTINGS, BOXES AND SIMILAR ITEMS AS MAY BE REQUIRED TO MEET SUCH CONDITIONS.
3. BRANCH CIRCUIT NUMBERS INDICATED ON THE DRAWINGS ARE FOR IDENTIFICATION PURPOSES ONLY AND DO NOT NECESSARILY REFER TO PANELBOARD CIRCUIT NUMBERS. BRANCH CIRCUITS SHALL BE CONNECTED TO CIRCUITS ON PANELBOARD SO AS TO SECURE A REASONABLE BALANCE ON THE THREE PHASES. WHERE MORE THAN ONE CIRCUIT, WITH COMMON NEUTRAL INSTALLED IN THE SAME CONDUIT, EACH PHASE WIRE SHALL BE CONNECTED TO A DIFFERENT LEG OF THE SYSTEM.
4. ALL WORK SHALL BE DONE IN STRICT COMPLIANCE WITH SPECIFICATIONS AND NEW YORK CITY ELECTRICAL CODE.
5. ELECTRICAL CONTRACTOR SHALL CAREFULLY INVESTIGATE THE EXTENT OF THE WORK TO BE DONE BY HIM AND SHALL COMPLY WITH ALL REQUIREMENTS AND STANDARDS. CONTRACTORS SHALL FAMILIARIZE HIMSELF WITH THE ABOVE PRIOR TO SUBMITTAL OF HIS BID PROPOSAL. ANY EXTRAS GENERATED BY HIS FAILURE TO DO SO, WILL NOT BE RECOGNIZED.
6. ELECTRICAL CONTRACTOR SHALL FURNISH AND INSTALL TYPEWRITTEN DIRECTORIES IN ALL NEW PANELS INDICATING TYPE AND LOCATION OF LOAD BEING SERVED BY INDIVIDUAL CIRCUIT BREAKER.
7. NOTIFY ENGINEER OF CONFLICTS BETWEEN DRAWINGS AND SPECIFICATIONS BEFORE SUBMITTAL OF BID PROPOSAL. THE ENGINEER'S DECISION WILL GOVERN EITHER BEFORE OR AFTER BIDDING.
8. COORDINATE ALL WORK WITH THE WORK OF ALL OTHER TRADES SO AS NOT TO INTERFERE WITH THEIR WORK.
9. GROUND CONTINUITY SHALL BE MAINTAINED THROUGHOUT.
10. LOCATION OF ALL ELECTRICAL EQUIPMENT IS APPROXIMATE, EXACT LOCATION TO BE VERIFIED IN THE FIELD
11. AS SHOWN ON PLANS, DISCONNECT & REMOVE EXISTING EQUIPMENT AS REQUIRED BY CONSTRUCTION (DISCONNECT SWITCHES, WIRES AND CONDUIT, ETC.)
12. FURNISH ALL PERMITS AND FILINGS AS REQUIRED AS PART OF THIS CONTRACT. THE ELECTRICAL WORK SHALL INCLUDE THE RESPONSIBILITY FOR ALL REQUIRED FILINGS WITH THE BUILDING DEPARTMENT AND THE FIRE DEPARTMENT FOR ALL ADDITIONS OR MODIFICATIONS TO THE STANDALONE FIRE ALARM SYSTEM.
   WHERE THE APPLICANT IS REQUIRED TO BE A LICENSED PROFESSIONAL ENGINEER, COSENTINI ASSOCIATES WILL REVIEW THE ELECTRICAL CONTRACTOR'S SUBMISSION AND SIGN AND SEAL THE APPLICATION PREPARED BY THE ELECTRICAL CONTRACTOR. THE ELECTRICAL WORK SHALL INCLUDE THE FURNISHING OF THE REQUIRED QUANTITIES OF FLOOR PLANS, RISERS, WIRING DIAGRAMS, DESCRIPTIVE NOTES, SPECIFICATIONS AND SHOP DRAWINGS, THE PREPARATION AND FILING OF ALL REQUIRED APPLICATION FORMS AND THE PAYMENT OF ALL FILING FEES.
13. ALL EXISTING EQUIPMENT SHALL BE PROTECTED DURING THE CONSTRUCTION.
14. CONTRACTOR SHALL ESTABLISH A SAFETY LOCK OUT AND TAGOUT (LOTO) PROCEDURES.

SCOPE OF WORK:

1. CONTRACTOR SHALL RELOCATE EXISTING EQUIPMENT SERVING MARINA AND POLICE MEMORIAL FOUNTAIN FROM THE UNDERGROUND VAULTS TO NEW UTILITY STRUCTURES, CONSTRUCTED ABOVE FLOOD LEVEL. EXTEND EXISTING FEEDERS SERVING MARINA, POLICE MEMORIAL FOUNTAIN SITE LIGHTING, ETC. WHICH ORIGINATE IN BPC NORTH COVE VAULT AND POLICE MEMORIAL VAULTS AS REQUIRED.
2. EXTEND EXISTING SITE LIGHTING CONDUITS AND CIRCUITS WHICH ARE IN THE WAY OF NEW UTILITY STRUCTURES AS PER FIELD CONDITIONS.

ELECTRICAL DRAWING LIST:

E-001	ELECTRICAL SYMBOLS, NOTES, DRAWINGS LIST AND SPECIFICATIONS
E-002	ELECTRICAL DEMOLITION NOTES
E-100	ELECTRICAL EXISTING ELECTRICAL SERVICES AND DISTRIBUTION EQUIPMENT SERVING POLICE PLAZA
E-200	ELECTRICAL MODIFICATION OF EXISTING ELECTRICAL SERVICES AND DISTRIBUTION EQUIPMENT SERVING POLICE PLAZA & MARINE (FLOOD RESILIENCE)
E-300	ELECTRICAL WORK IN CONNECTION W/ POLICE MEMORIAL PLAZA PUMPS & CONTROLLERS RELOCATION
E-400	ELECTRICAL WORK IN CONNECTION W/ POLICE MEMORIAL PLAZA PUMPS & CONTROLLERS RELOCATION DETAILS
E-500	ELECTRICAL WORK IN CONNECTION W/ POLICE MEMORIAL MEMORIAL PLAZA PUMPS & CONTROLLERS RELOCATION SCHEDULES AND DETAILS
E-600	ELECTRICAL ONE LINE DIAGRAM FOR NEW UTILITIES WEST AND EAST STRUCTURES
E-700	ELECTRICAL NEW WEST AND EAST UTILITY STRUCTURES DETAIL

SYMBOL LIST

SYMBOL	DESCRIPTION	NOTES
A-3	NUMBER(S) IN THIS FIELD INDICATES CIRCUIT NUMBER(S) FROM PANEL-BOARD	WHEN ALL DEVICES, FIXTURES, ETC. WITHIN ONE ROOM OR FURNITURE SYSTEM CUBICLE ARE TO BE CONNECTED TO A SINGLE CIRCUIT (EXCEPT FOR EMERGENCY FIXTURES), THE CIRCUIT NUMBER IS SHOWN IN A BOX, E.G.: A-7
	LETTER(S) IN THIS FIELD INDICATES PANELBOARD ON FLOOR "X" AS FOLLOWS: LYA – INDICATES PANEL–BOARD LL–YA WHERE "Y" IS A FLOOR NUMBER; LYB – INDICATES PANEL–BOARD LL–YB WHERE "Y" IS A FLOOR NUMBER; A1,A2,ETC – INDICATES PANELBOARD AP–LA1, AP–LA2, ETC; B1,B2,ETC – INDICATES PANELBOARD AP–LB1, AP–LB2, ETC; IN GENERAL, PANEL DESIGNATION CONTAINING AN "L" INDICATES A 120/208V LIGHTING PANEL.	PERTINENT INFORMATION FOR CIRCUITRY OVER 20 AMPS IS NOTED THUS: A-3,5,7 3P/50A CB 3#6–1"C. — CIRCUIT NUMBERS; BRANCH POLES TO BE CONNECTED TO AT PANEL; SIZE OF C.B. TO BE CONNECTED TO AT PANEL; SIZE OF CONDUCTORS AND CONDUIT; QUANTITY OF CONDUCTORS (WHERE QUANTITY OF CONDUCTORS IS GREATER THAN QUANTITY OF BRANCH POLES TO BE CONNECTED IN PANEL, THE EXCESS CONDUCTORS ARE NEUTRAL(S)
LC	LIGHTING CONTROL PANEL – NORMAL CIRCUITS	
	APPLIANCE PANEL.	
	TRANSFORMER.	
	MOTORS IN MECHANICAL SYSTEM EQUIPMENT.	
	INDIVIDUALLY MOUNTED DISCONNECT SWITCH.	{VOLTAGE RATING/POLES} {OVERCURRENT SIZE} {AMPERE FRAME}

NOTES:

1. GENERAL

A. CONTRACTOR SHALL CAREFULLY EXAMINE THE EXISTING SPACE SO AS TO BECOME FAMILIAR WITH EXISTING CONDITIONS. SUBMISSION OF A PROPOSAL WILL BE CONSTRUED AS EVIDENCE THAT SUCH EXAMINATION HAS BEEN MADE AND LATER CLAIMS FOR LABOR, EQUIPMENT, OR MATERIALS REQUIRED BECAUSE OF DIFFICULTIES ENCOUNTERED, WHICH COULD HAVE BEEN FORESEEN HAD SUCH AND EXAMINATION BEEN MADE, WILL NOT BE RECOGNIZED.

B. CONTRACTOR SHALL EXAMINE THE ELECTRICAL DEMOLITION DRAWINGS AND THE DRAWINGS OF ALL OTHER TRADES AND COORDINATE THE LOCATION OF ALL EQUIPMENT THAT MAY AFFECTS THIS WORK.

C. CONTRACTOR SHALL CONFIRM AREA(S) OF DEMOLITION PRIOR TO COMMENCEMENT OF ANY WORK AND CAREFULLY COORDINATE THE SELECTIVE DEMOLITION PORTION OF WORK WITH OTHER TRADES. CONTRACTOR SHALL PERFORM ALL DEMOLITION REQUIRED TO ACHIEVE DESIGN INTENT, AS DESCRIBED IN CONTRACT DOCUMENTS.

D. ALL DEMOLITION PHASES SHALL BE FULLY COORDINATED WITH ARCHITECT PRIOR TO COMMENCEMENT OF ANY WORK.

E. THE CONTRACTOR SHALL COMPARE THE EXISTING FIELD CONDITIONS WITH THE DRAWINGS AND SPECIFICATIONS AND SATISFY HIMSELF OF THE CONDITIONS EXISTING AT THE PRESENT BUILDING BEFORE DELIVERY OF HIS PROPOSAL. NO ADDITIONAL COMPENSATION WILL BE MADE TO THE CONTRACTOR DUE TO HIS NEGLECT OR FAILURE TO COMPLY WITH THE SPECIFIED REQUIREMENTS.

F. DEMOLITION AND RELOCATION OF EXISTING ELECTRICAL AND TELECOM SYSTEMS SHALL BE PERFORMED AS SCHEDULED WITH OWNER REPRESENTATIVE/ ARCHITECT. PLAN OF DEMOLITION WORK TO INSURE MINIMUM INTERFERENCE WITH THE REGULAR OPERATIONS OF EXISTING FACILITIES. SUBMIT TO THE OWNER FOR APPROVAL SCHEDULE OF NECESSARY TEMPORARY SHUT-DOWNS SHALL BE MADE AT SUCH TIME AS WILL NOT INTERFERE WITH REGULAR OPERATION OF EXISTING FACILITIES AND ONLY AFTER WRITTEN APPROVAL OF THE OWNER/REPRESENTATIVE.

G. NOTES AND DIAGRAMATIC PRESENTATION REFLECTED ON THE DRAWINGS SHALL NOT LIMIT SCOPE OF DEMOLITION REQUIRED.

H. DISCONNECT, REMOVE AND/OR RELOCATE ELECTRICAL MATERIAL, EQUIPMENT, DEVICES, COMPONENTS, OR OTHER WORK NOTED AND REQUIRED BY DEMOLITION IN EXISTING SPACE.

I. ALL CIRCUITS TO BE DEMOLISHED SHALL BE DE-ENERGIZED AT THEIR SOURCE PRIOR TO BEGINNING ANY DEMOLITION WORK. ALL EQUIPMENT REMOVED SHALL BE GIVEN TO OWNER OR DISPOSED AS DIRECTED BY OWNER. CONTRACTOR SHALL CONSULT WITH BPC FACILITY STAFF REGARDING ANY ITEMS, WHICH CAN BE SALVAGED BY THE BPC.

J. WHEREVER CIRCUITS BECOME SPARE AS A RESULT OF DEMOLITION WORK, CONTRACTOR SHALL DISCONNECT AND REMOVE EXISTING CONDUIT AND WIRING BACK TO THE PANEL. ALL DISTURBED PENETRATIONS THROUGH SLABS OR FIRE RATED PARTITIONS SHALL BE FIRE STOPPED USING APPROVED METHOD TO MAINTAIN THE FIRE RESISTANCE RATING OF THE UTILITY STRUCTURES.

K. LOCATION OF ALL EXISTING ELECTRICAL EQUIPMENT AND DEVICES IS APPROXIMATE, EXACT LOCATION TO BE VERIFIED IN THE FIELD.

L. DURING DEMOLITION PROCEDURES, PROVIDE ALL NECESSARY PROTECTION FOR EXISTING ELECTRICAL WORK TO REMAIN.

M. MAINTAIN CONTINUOUS OPERATION OF ALL FACILITIES TO REMAIN BUT AFFECTED BY THE WORK.

N. INTERRUPT ALARM AND EMERGENCY SYSTEMS ONLY WITH THE WRITTEN CONSENT OF THE OWNER.

O. PERFORM ALL REQUIRED TEMPORARY SHUT-DOWNS, ONLY WITH WRITTEN CONSENT OF THE OWNER REPRESENTATIVE/OWNER. ALL SHUTDOWNS SHALL BE SCHEDULES AT TIMES TO NOT TO INTERFERE WITH NORMAL OPERATION OF THE FACILITY (MARINA).

Q. PROVIDE A TEMPORARY LIGHT AND POWER SYSTEM (AS PART OF THIS CONTRACT) ADEQUATE FOR THE REQUIREMENTS OF ALL TRADES DURING FUTURE CONSTRUCTION.

R. EXISTING SYSTEMS, CABLING, WIRING AND SERVING EXISTING AREAS OUTSIDE OF DEMOLITION AREA SHALL REMAIN IN SERVICE OR TO BE RELOCATED, AS REQUIRED, TO MAINTAIN OPERATION OF EXISTING SYSTEMS.

S. DURING DEMOLITION PROCEDURES, PROVIDE ALL NECESSARY PROTECTION FOR EXISTING ELECTRICAL WORK TO REMAIN IN SERVICE OR REQUIRED FOR REUSE.

T. EXISTING BASE BUILDING FIRE ALARM SYSTEM AND ALL DEVICES AND COMPONENTS SHALL REMAIN IN OPERATION AT ALL TIMES. CONTRACTOR SHALL MAINTAIN CONTINUITY OF WIRING TO ALL FIRE ALARM DEVICES AND PROTECT ALL EXISTING FIRE ALARM DEVICES DURING CONSTRUCTION.

U. EXISTING EMERGENCY LIGHTING FIXTURES SHALL BE MAINTAINED OPERATIONAL DURING ALL DEMOLITION AND CONSTRUCTION ACTIVITIES.

2. GENERAL II

A. ADHERE TO THE APPLICABLE CONDITIONS INDICATED IN THE ARCHITECTURAL SPECIFICATIONS

B. EXAMINE THE ARCHITECTURAL DRAWINGS AND THE DRAWINGS OF ALL OTHER TRADES AND COORDINATE THE LOCATION OF ALL EQUIPMENT THAT AFFECTS THIS WORK.

C. CONTRACTOR SHALL CAREFULLY EXAMINE THE EXISTING SPACE SO AS TO BECOME FAMILIAR WITH EXISTING CONDITIONS AND DIFFICULTIES. SUBMISSION OF A PROPOSAL WILL BE CONSTRUED AS EVIDENCE THAT SUCH EXAMINATION HAS BEEN MADE AND LATER CLAIMS FOR LABOR, EQUIPMENT, OR MATERIALS REQUIRED BECAUSE OF DIFFICULTIES ENCOUNTERED, WHICH COULD HAVE BEEN FORESEEN HAD SUCH AND EXAMINATION BEEN MADE, WILL NOT BE RECOGNIZED.

D. BASE ALL LABOR PRICING ON REGULAR TIME. CONNECTION TO EXISTING SERVICES MUST BE APPROVED BY THE OWNER PRIOR TO INTERRUPTION OF ANY BUILDING'S SERVICES. SUBMIT ADDITIONAL COST FOR EVALUATION TO MAKE EACH NEW CONNECTION ON PREMIUM TIME.

E. OBTAIN ALL THE NECESSARY PERMITS AND APPROVALS TO PROVIDE A COMPLETE JOB. TRANSMIT CERTIFICATES AND PERMITS TO THE OWNER AT THE COMPLETION OF THE WORK.

F. CONTRACTOR SHALL CONFIRM AREA(S) OF DEMOLITION PRIOR TO COMMENCEMENT OF ANY WORK AND CAREFULLY COORDINATE THE SELECTIVE DEMOLITION PORTION (OF WORK) WITH OTHER TRADES.

3. DEMOLITION REMOVAL AND RELOCATION OF EXISTING WORK

A. ALL DEMOLITION PHASES SHALL BE FULLY COORDINATED WITH THE CONSTRUCTION MANAGER, OWNERS REPRESENTATIVE AND THE ARCHITECT, PRIOR TO COMMENCEMENT OF ANY WORK.

B. THE CONTRACTOR SHALL COMPARE THE EXISTING FIELD CONDITIONS WITH THE DRAWINGS AND SPECIFICATIONS AND SATISFY HIMSELF OF THE CONDITIONS EXISTING AT THE PRESENT VAULTS AND AT THE SITE BEFORE DELIVERY OF HIS PROPOSAL. NO ADDITIONAL COMPENSATION WILL BE MADE TO THE CONTRACTOR DUE TO HIS NEGLECT OR FAILURE TO COMPLY WITH THE SPECIFIED REQUIREMENTS.

C. DEMOLITION OF EXISTING ELECTRICAL AND TELEPHONE SYSTEMS SHALL BE PERFORMED AS SCHEDULED BY THE OWNER REPRESENTATIVE AND THE ARCHITECT. PLAN INSTALLATION OF NEW AND INTERIM WORK AND CONNECTIONS TO EXISTING WORK TO INSURE MINIMUM INTERFERENCE WITH THE REGULAR OPERATIONS OF EXISTING FACILITIES. SUBMIT TO THE OWNER FOR APPROVAL SCHEDULE OF NECESSARY TEMPORARY SHUT-DOWNS OF EXISTING SERVICES. ALL SHUT-DOWNS SHALL BE MADE AT SUCH TIME AS WILL NOT INTERFERE WITH REGULAR OPERATION OF EXISTING FACILITIES AND ONLY AFTER WRITTEN APPROVAL OF THE OWNER/REPRESENTATIVE. CONNECT NEW WORK TO EXISTING WORK IN NEAT AND APPROVED MANNER; RESTORE EXISTING WORK DISTURBED TO ORIGINAL CONDITION. TO INSURE CONTINUOUS OPERATION, MAKE TEMPORARY CONNECTION BETWEEN NEW AND EXISTING WORK.

D. REMOVE, RELOCATE, REPLACE, ADJUST OR OTHERWISE ADAPT OR MODIFY EXISTING WIRING, RACEWAYS, CONDUIT, AND OTHER ELECTRICAL EQUIPMENT OR APPARATUS AS REQUIRED BY THE DRAWINGS, FIELD CONDITIONS, AND SPECIFICATIONS AND ALSO AS MAY BE REQUIRED WHEN SUCH WORK IS UNCOVERED OR WHEN FOUND TO INTERFERE WITH THE CARRYING OUT OF THE COMPLETION OF THE WORK OF THIS TRADE OR OTHER DIVISION OF THE WORK.

E. INCLUDE THE FURNISHING OF ALL MATERIALS, CUTTING, EXTENSIONS, CONNECTIONS, REPAIRING, ADAPTING, AND OTHER WORK INCIDENTAL THERETO, TOGETHER WITH SUCH TEMPORARY CONNECTIONS AS MAY BE REQUIRED PENDING COMPLETION OF THE PERMANENT WORK.

F. INCLUDE THE REMOVAL OF MATERIALS, AS DIRECTED, WHICH MAY INTERFERE WITH THE INSTALLATIONS. REPLACE AND REARRANGE ALL SUCH DISTURBED MATERIALS TO SUIT THE NEW CONDITIONS.

G. LEAVE WORK IN GOOD WORKING ORDER AND IN A CONDITION EQUAL TO THE ADJACENT NEW OR EXISTING WORK. PROVIDE ANY WORK NOT SHOWN ON THE DRAWINGS OR MENTIONED IN THE SPECIFICATION BUT CONSIDERED NECESSARY FOR THE COMPLETION OF THE WORK UNDER THIS SECTION WITHOUT ADDITIONAL CHARGE. WATERPROOF ALL PULL BOXES AND CONDUITS AS INDICATED ON CONTRACT DOCUMENTS.

H. WHERE PRESENT WORK IS DAMAGED IN THE EXECUTION OF THIS CONTRACT DUE TO THE REMOVAL OF RACEWAYS, EQUIPMENT OR APPARATUS, REPAIR THE SAME TO CORRESPOND IN MATERIAL, QUALITY, SHAPE AND FINISH WITH THAT OF SIMILAR AND ADJOINING WORK, UNLESS OTHERWISE CALLED FOR. ALL MATERIALS USED IN UNDERGROUND VAULTS SHALL BE SUITABLE FOR MARINE DAMPWET ENVIRONMENT, WHICH IS SUBJECT TO INCIDENTAL BUT PROLONGED FLOODING.

I. SHOULD ANY DAMAGE DUE TO THE EXECUTION OF THIS CONTRACT OCCUR TO THE EXISTING FIXTURES, OR ANY OTHER EQUIPMENT OR APPARATUS, PROPERLY REPAIR SUCH DAMAGES AND MAKE GOOD WITHOUT EXTRA CHARGE, WITH THE SUPPLY OF NEW ARTICLES OR OTHERWISE, AS MAY BE REQUIRED, TO LEAVE THE VAULTS AND UTILITY STRUCTURES AND IN PERFECT ORDER AT COMPLETION.

J. PRESENT MATERIAL OR EQUIPMENT MAY BE REUSED ONLY WHEN SAME IS SPECIFIED OR SHOWN ON THE DRAWINGS TO BE REUSED OR RELOCATED. PROVIDE ALL OTHER MATERIALS AND EQUIPMENT NEW AND AS SPECIFIED.

K. THE WORK OF TAKING DOWN AND REMOVING ANY PART OF PRESENT EQUIPMENT, OF MAKING ALTERATIONS OR OF PREPARING FOR AND REPLACING NEW WORK THEREIN TO BE DONE ONLY AFTER PERMISSION HAS BEEN OBTAINED FROM THE OWNER REPRESENTATIVE/ARCHITECT.

L. PLAN INSTALLATION OF NEW WORK AND CONNECTION TO EXISTING WORK TO INSURE MINIMUM INTERFERENCE WITH REGULAR OPERATION OF EXISTING FACILITIES. WORK TO BE DONE IN ACCORDANCE WITH THE SCHEDULE AGREED UPON MUTUALLY BETWEEN OWNER REPRESENTATIVE AND THE CONTRACTOR. MAKE ALL SHUT-DOWNS AT SUCH TIMES AS WILL NOT INTERFERE WITH REGULAR OPERATION OF EXISTING FACILITIES AND ONLY AFTER WRITTEN APPROVAL OF THE OWNER REPRESENTATIVE TO INSURE CONTINUOUS OPERATION, MAKE NECESSARY TEMPORARY CONNECTIONS BETWEEN NEW AND EXISTING WORK.

M. DISCONNECT, REMOVE AND/OR RELOCATE ELECTRICAL MATERIAL, EQUIPMENT, DEVICES, COMPONENTS, OR OTHER WORK NOTED AND REQUIRED BY DEMOLITION OR ALTERATIONS IN EXISTING CONSTRUCTION.

N. PROVIDE NEW MATERIAL AND EQUIPMENT REQUIRED FOR RELOCATED EQUIPMENT.

O. REMOVE CONDUCTORS FROM EXISTING RACEWAYS TO BE REWIRED. CLEAN RACEWAYS AS REQUIRED PRIOR TO REWIRING.

P. REMOVE EXISTING CONDUITS NOT UTILIZED FOR NEW CONSTRUCTION.

R. DISPOSE OF REMOVED RACEWAYS AND WIRING.

S. DISPOSE OF REMOVED ELECTRICAL EQUIPMENT.

T. RECONNECT AND RESTORE TO PRESENT FUNCTION AS PART OF THE ELECTRICAL SYSTEM ALL ELECTRICAL WORK IN ADJOINING AREAS (SITE LIGHTING) WHICH IS INDICATED ON THE DRAWINGS TO CONTINUE TO FUNCTION BUT IS AFFECTED BY DEMOLITION WORK.

U. CONNECT NEW WORK TO EXISTING WORK IN A NEAT AND ACCEPTABLE MANNER, WITH MINIMUM INTERFERENCE TO EXISTING FACILITIES.

V. MAINTAIN CONTINUOUS OPERATION OF EXISTING FACILITIES AFFECTED BY THE WORK.

W. MAKE TEMPORARY SHUTDOWNS WHEN REQUIRED, ONLY WITH WRITTEN CONSENT OF THE OWNER REPRESENTATIVE AND AT TIMES NOT TO INTERFERE WITH NORMAL OPERATION.

X. PROVIDE TEMPORARY POWER FOR ALL SITE EQUIPMENT, TRAILER, TEMP. FACILITIES, ETC. AS DIRECTED BY OWNER/REPRESENTATIVE, WHEN POWER IS TO BE INTERRUPTED.

Y. WHERE INDICATED ON THE DRAWINGS OR REQUIRED BY THE ALTERATION SCHEME, REMOVE ALL ELECTRICAL OUTLETS, SWITCHES, AND OTHER DEVICES, COMPLETE WITH ASSOCIATED WIRING, CONDUIT, ETC., FROM PARTITIONS, WALLS AND FLOORS THAT ARE TO BE REMOVED. WHEN THE REMOVAL OF THESE ITEMS MAKE DEAD ELECTRICAL WIRING THAT IS TO REMAIN, INSTALL JUNCTION BOXES OR OTHER DEVICES AND PROVIDE BYPASS CONNECTIONS NECESSARY TO MAKE THE CIRCUITS AFFECTED CONTINUOUS AND READY FOR OPERATION. OTHERWISE, REMOVE WIRING BACK TO THE NEAREST ELECTRICAL OUTLET BOX THAT IS TO REMAIN, OR TO THE PANELBOARD.

Z. REMOVE AND REROUTE BEHIND FINISHED SURFACES ALL RACEWAYS WHICH BECOME EXPOSED BEYOND FINISHED SURFACES BECAUSE OF THE ALTERATION WORK.

AA. INTERRUPT AT CONVENIENT LOCATIONS, REROUTED (NEW WIRING AND CONDUITS) AND RECONNECT FOR CONTINUATION OF THEIR ORIGINAL FUNCTION WIRING THAT IS TO BE REMOVED AS A RESULT OF DEMOLITION WORK, BUT IS REQUIRED TO CONTINUE TO FUNCTION. MATCH NEW WIRING EXTENSIONS TO EXISTING ONES IN ALL RESPECTS, CONDUCTOR AMAPACITY, CONDUIT SIZE, ETC.

4. TEMPORARY LIGHT AND POWER

A. PROVIDE A TEMPORARY LIGHT AND POWER SYSTEM (AS PART OF THIS CONTRACT) ADEQUATE FOR THE REQUIREMENTS OF ALL TRADES DURING CONSTRUCTION. TEMPORARY SYSTEM SHALL BE DISCONNECTED AND REMOVED WHEN PERMANENT SERVICE IS IN OPERATION.

B. PROVIDE ALL WIRING, SUPPORTS, LAMP SOCKETS, RECEPTACLE SOCKET AND ANY OTHER MATERIALS, SUPPLIES OR EQUIPMENT NECESSARY FOR TEMPORARY LIGHT AND POWER SYSTEM.

C. INSTALL SEPARATE STRINGER CIRCUITS FOR LIGHTING AND RECEPTACLES. PROVIDE ONE LAMP SOCKET AND ONE DUPLEX RECEPTACLE (OR TWO SINGLE RECEPTACLES) FOR EVERY 400 SQUARE FEET OF NEW GENERAL CONSTRUCTION AREA (APPROXIMATELY 20 FEET ON CENTERS). FURTHERMORE, PROVIDE ONE LAMP SOCKET AND ONE DUPLEX RECEPTACLE EVERY 20 FEET ALONG THE PERIPHERAL WALLS OF THE CONSTRUCTION AREAS FOR TEMPORARY CONDITIONS. REPLACE BURNED OUT LAMPS AS REQUIRED FOR AS LONG AS THE TEMPORARY LIGHTING SYSTEM IS MAINTAINED IN OPERATION.

5. MISCELLANEOUS NOTES:

A. COMPLY WITH REQUIREMENTS OF AUTHORITIES HAVING JURISDICTION AND OF UTILITY COMPANY PROVIDING ELECTRICAL POWER AND OTHER SERVICES. COORDINATE INSTALLATION AND CONNECTION OF EXTERIOR UNDERGROUND UTILITIES AND SERVICES.

B. GROUNDING UNDERGROUND DISTRIBUTION SYSTEM COMPONENTS COMPLIES WITH IEEE C2 GROUNDING REQUIREMENTS AND THE FOLLOWING. PROVIDE ADDITIONAL GROUNDING IF REQUIRED TO COMPLY WITH UTILITY COMPANY STANDARDS.

C .GROUNDING CONCRETE PULLBOXES, HANDHOLES, AND MANHOLES: INSTALL A DRIVEN GROUND ROD THROUGH PULLBOX OR HANDHOLE FLOOR, CLOSE TO WALL, AND SET ROD DEPTH SO 4 INCHES (100 MM) WILL EXTEND ABOVE FINISHED FLOOR. IF NECESSARY, INSTALL GROUND ROD BEFORE PULLBOX IS FORMED AND PROVIDE NO. 1/0 AWG BARE, TINNED-COPPER CONDUCTOR FROM GROUND ROD INTO MANHOLE THROUGH A WATERPROOF SLEEVE IN PULLBOX WALL. PROTECT GROUND RODS PASSING THROUGH CONCRETE FLOOR WITH A DOUBLE WRAPPING OF PRESSURE-SENSITIVE INSULATING TAPE OR HEAT-SHRUNK INSULATING SLEEVE FROM 2 INCHES (50 MM) ABOVE TO 6 INCHES (150 MM) BELOW CONCRETE. SEAL FLOOR OPENING WITH WATERPROOF, NON-SHRINK GROUT.2.GROUNDING CONNECTIONS TO PULLBOX COMPONENTS: BOND EXPOSED-METAL PARTS SUCH AS INSERTS, CABLE RACKS, PULLING IRONS, LADDERS, AND CABLE SHIELDS WITHIN EACH MANHOLE OR HANDHOLE, TO GROUND ROD OR GROUNDING CONDUCTOR. MAKE CONNECTIONS WITH NO. 4 AWG MINIMUM, STRANDED, HARD-DRAWN COPPER BONDING CONDUCTOR. TRAIN CONDUCTORS LEVEL OR PLUMB AROUND CORNERS AND FASTEN TO MANHOLE WALLS. CONNECT TO CABLE ARMOR AND CABLE SHIELDS AS RECOMMENDED BY MANUFACTURER OF SPLICING AND TERMINATION KITS.

D. PAD-MOUNTED TRANSFORMERS AND SWITCHES: INSTALL TWO GROUND RODS AND GROUND RING AROUND THE PAD. GROUND PAD-MOUNTED EQUIPMENT AND NONCURRENT-CARRYING METAL ITEMS ASSOCIATED WITH PAD MOUNTED EQUIPMENT BY CONNECTING THEM TO UNDERGROUND CABLE AND GROUNDING ELECTRODES. INSTALL TINNED-COPPER CONDUCTOR NOT LESS THAN NO. 2 AWG FOR GROUND RING AND FOR TAPS TO EQUIPMENT GROUNDING TERMINALS. BURY GROUND RING NOT LESS THAN 6 INCHES (150 MM) FROM THE FOUNDATION.

E. GROUND ELECTRICAL SYSTEMS AND EQUIPMENT ACCORDING TO NFPA 70, AS AMENDED BY STATE AND LOCAL CODES (NEW YORK CITY ELECTRICAL CODE), EXCEPT WHERE DRAWINGS OR SPECIFICATIONS EXCEED SUCH REQUIREMENTS.

a) GROUNDING RODS: LOCATE A MINIMUM OF 1-ROD LENGTH FROM EACH OTHER AND AT LEAST THE SAME DISTANCE FROM ANY OTHER GROUNDING ELECTRODE.

b) DRIVE UNTIL TOPS ARE 2 INCHES (50 MM) BELOW FINISHED FLOOR OR FINAL GRADE, EXCEPT AS OTHERWISE INDICATED.

c) INTERCONNECT WITH GROUNDING-ELECTRODE CONDUCTORS. USE EXOTHERMIC WELDS, EXCEPT AT TEST WELLS AND AS OTHERWISE INDICATED. MAKE THESE CONNECTIONS WITHOUT DAMAGING COPPER COATING OR EXPOSING STEEL.C.GROUNDING PLATES: LOCATE A MINIMUM OF 6 FEET (2 M) FROM EACH OTHER AND AT LEAST THE SAME DISTANCE FROM ANY OTHER GROUNDING ELECTRODE.1.INSTALL A MINIMUM 30 INCHES (750 MM) BELOW FINISHED FLOOR OR FINAL GRADE.2.INTERCONNECT WITH GROUNDING-ELECTRODE CONDUCTORS. USE EXOTHERMIC WELDS, EXCEPT AT TEST WELLS AND AS OTHERWISE INDICATED. MAKE THESE CONNECTIONS WITHOUT DAMAGING COPPER COATING OR EXPOSING STEEL.D.GROUNDING CONDUCTORS: ROUTE ALONG THE SHORTEST AND STRAIGHTEST PATHS POSSIBLE, EXCEPT AS OTHERWISE INDICATED. AVOID OBSTRUCTING ACCESS OR PLACING CONDUCTORS WHERE THEY MAY BE SUBJECTED TO STRAIN, IMPACT, OR DAMAGE.E.UNDERGROUND GROUNDING CONDUCTORS: USE BARE COPPER WIRE. BURY AT LEAST 24 INCHES (600 MM) BELOW GRADE.F.METAL WATER SERVICE PIPE: PROVIDE INSULATED COPPER GROUNDING CONDUCTORS, SIZED AS INDICATED, IN CONDUIT, FROM BUILDING'S MAIN SERVICE EQUIPMENT, OR GROUNDING BUS, TO MAIN METAL WATER SERVICE ENTRANCES TO BUILDING. CONNECT GROUNDING CONDUCTORS TO MAIN METAL WATER SERVICE PIPES BY GROUNDING-CLAMP CONNECTORS. WHERE A DIELECTRIC MAIN WATER FITTING IS INSTALLED, CONNECT GROUNDING CONDUCTOR TO STREET SIDE OF FITTING. PROVIDE A GROUNDING JUMPER WITH THE SAME SIZE CONDUCTOR ACROSS DIELECTRIC FITTINGS. BOND GROUNDING-CONDUCTOR CONDUIT TO CONDUCTOR AT EACH END.

F. EQUIPMENT, MATERIAL, LAYOUT AND INSTALLATION PROVIDED AS PART OF THE ELECTRICAL WORK SHALL CONFORM TO THE REQUIREMENTS OF THE ADVISORY BOARD OF THE DEPARTMENT OF BUILDINGS BUREAU OF THE ELECTRICAL DIVISION (DEPARTMENT OF BUILDINGS) AND OTHER AGENCIES HAVING JURISDICTION. INCLUDE AS PART OF THE ELECTRICAL WORK ALL REQUIRED FILINGS AND SUBMISSIONS FOR APPROVAL. EQUIPMENT FURNISHED SEPARATE FROM - BUT INSTALLED AS PART OF - THE ELECTRICAL WORK, WHICH DOES NOT HAVE ALL NECESSARY APPROVALS, SHALL NOT BE INSTALLED UNTIL APPROVALS ARE OBTAINED BY THE PARTIES FURNISHING THE EQUIPMENT. THE SPECIAL INSPECTION FOR CERTAIN PORTIONS OF THE WORK AS CALLED FOR IN THE NEW YORK CITY BUILDING CODE, SECTION 1704 AND THE FILING OF ALL NECESSARY REPORTS FOR APPROVAL, WITH THE BUILDING DEPARTMENT SHALL BE INCLUDED AS PART OF THE ELECTRIC WORK.

G. EXCEPT WHERE MODIFIED BY A SPECIFIC NOTATION TO THE CONTRARY, IT SHALL BE UNDERSTOOD THAT THE INDICATION AND/OR DESCRIPTION OF ANY ELECTRICAL ITEM IN THE DRAWINGS AND SPECIFICATIONS FOR ELECTRICAL WORK CARRIES WITH IT THE INSTRUCTION TO FURNISH, INSTALL AND CONNECT THE ITEM AS PART OF THE ELECTRICAL WORK REGARDLESS OF WHETHER OR NOT THIS INSTRUCTION IS EXPLICITLY STATED.

H. IT SHALL BE UNDERSTOOD THAT THE SPECIFICATIONS AND DRAWINGS ARE COMPLEMENTARY AND ARE TO BE TAKEN TOGETHER FOR A COMPLETE INTERPRETATION OF THE WORK. WHERE THERE ARE CONFLICTS BETWEEN THE DRAWINGS AND SPECIFICATIONS OR WITHIN THE SPECIFICATIONS OR DRAWINGS THEMSELVES, THE ITEMS OF HIGHER STANDARD SHALL GOVERN.

I. TO THE EXTENT THAT THEY GOVERN THE BASIC WORK, THE SPECIFICATIONS ALSO GOVERN CHANGE ORDER WORK IF ANY.

J. NO EXCLUSION FROM OR LIMITATION IN, THE SYMBOLISM USED ON THE DRAWINGS FOR ELECTRICAL WORK OR THE LANGUAGE USED IN THE SPECIFICATIONS FOR ELECTRICAL WORK SHALL BE INTERPRETED AS A REASON FOR OMITTING THE APPURTENANCES OR ACCESSORIES NECESSARY TO COMPLETE ANY REQUIRED SYSTEM OR ITEM OF EQUIPMENT.

K. THE GROUNDING ELECTRODE FOR EACH LOW VOLTAGE (BOTH WINDINGS 600 VOLTS OR LESS) TRANSFORMER SHALL BE THE MAIN WATER SERVICE PIPE ENTERING THE BUILDING TAKEN AT A POINT ON THE STREET SIDE OF ITS MAIN VALVE. UTILIZE A COMMON GROUND CLAMP ON THE MAIN WATER PIPE, WITH MEANS FOR CONNECTING THE MULTIPLE SEPARATE GROUNDING CONDUCTORS FROM THE VARIOUS TRANSFORMERS. IN LIEU OF MULTIPLE SEPARATE GROUNDING CONDUCTORS, MULTIPLE CONNECTION TO A "GROUND BUS CABLE" MAY BE UTILIZED. THE GROUND BUS CABLE SHALL CONSIST OF A 500 MCM GREEN CODED INSULATED COPPER CONDUCTOR RUN IN 1-1/2 INCH (DN 41) THREADED STEEL CONDUIT FROM THE STREET SIDE OF THE MAIN WATER SERVICE VALVE, THROUGHOUT THE BUILDING TO ALL DRY TYPE TRANSFORMER LOCATIONS REQUIRING GROUNDING. THE GROUND BUS CABLE SHALL BE CONNECTED TO THE MAIN WATER PIPE BY MEANS OF A GROUND CLAMP OF A TYPE SPECIFICALLY MANUFACTURED FOR THE PURPOSE. AT EACH TRANSFORMER LOCATION, ESTABLISH A "GROUNDING ELECTRODE" CONNECTION POINT BY ARRANGING A BREAK IN THE "GROUND BUS CABLE" CONDUIT EXPOSING THE CABLE FOR NOT MORE THAN A TWELVE INCH LENGTH. ENDS OF CONDUIT AT THE BREAK SHALL BE EQUIPPED WITH BUSHINGS. THE CONNECTION SHALL BE MADE BY MEANS OF AN IRREVERSIBLE COMPRESSION CONNECTOR LISTED FOR THE PURPOSE OR AN EXOTHERMIC WELD.

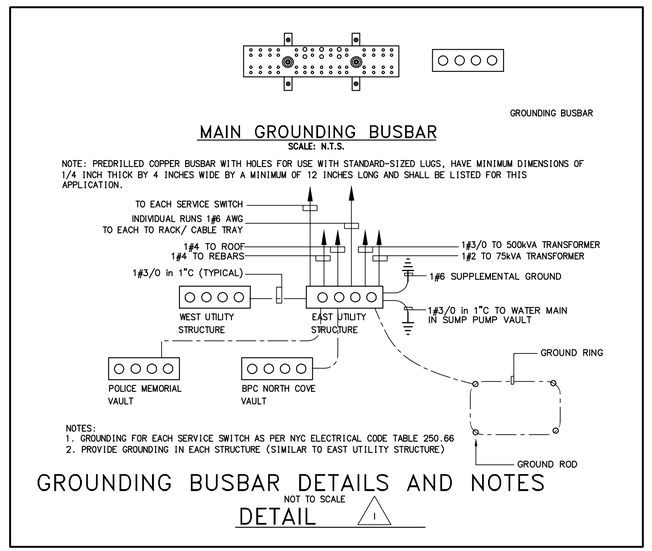

MAIN GROUNDING BUSBAR

SCALE: N.T.S.

NOTE: PREDRILLED COPPER BUSBAR WITH HOLES FOR USE WITH STANDARD-SIZED LUGS, HAVE MINIMUM DIMENSIONS OF 1/4 INCH THICK BY 4 INCHES WIDE BY A MINIMUM OF 12 INCHES LONG AND SHALL BE LISTED FOR THIS APPLICATION.

NOTES:
1. GROUNDING FOR EACH SERVICE SWITCH AS PER NYC ELECTRICAL CODE TABLE 250.66
2. PROVIDE GROUNDING IN EACH STRUCTURE (SIMILAR TO EAST UTILITY STRUCTURE)

GROUNDING BUSBAR DETAILS AND NOTES

NOT TO SCALE

DETAIL 1

NOTES & RFIS:

1. **WHAT CABLES ARE TO BE MARINE? ARE THEY ONLY THE 4/0 FEEDERS AND THE REST THHN/THWN?**
   ALL EXISTING CABLES RUNS (208V AND 460V) BETWEEN EXISTING NORTH COVE VAULT AND MARINA POWER PEDESTALS (BOAT CONNECTION – SEE E-200) WERE INSTALLED IN UTILITY DUCT WITHOUT CONDUIT. THESE CABLES ARE MARINE TYPE CABLES.
   THESE CABLES WILL BE REROUTED AND EXTENDED (TO MATCH EXISTING) TO SUBMETERED DISTRIBUTION BOARDS LOCATED IN NEW ABOVE GROUND UTILITY STRUCTURES.
   ALL OTHER CABLES INSTALLED IN CONDUITS WILL BE THWN-2 TYPE.

2. **ARE THE CIRCUITS FROM THE RELOCATED PANELS TO BE RUN IN THE NEW CONDUIT TO ORIGINAL ORIGIN? IF SO, CAN ONE PULL BOX BE USED WHERE THE ORIGINAL PANELS WERE? ALSO WHAT DISTANCE?**
   EXISTING CIRCUIT SHALL BE EXTENDED AS INDICATED ON E-500. USE OF PULL BOXES WILL BE ACCEPTABLE AS LONG AS SPLICE BOX AND SPLICING KIT IS SUITABLE FOR MARINE ENVIRONMENT AND LISTED FOR PROLONGED SUBMERSION IN OCEAN WATER, DISTANCE CAN BE ESTIMATED FROM E-200 DRAWING.

3. **DWG E400 SHOWS ALL CIRCUITS FROM THE DIMMER TO VAULT IN EXISTING CONDUIT. IT IS NOT CLEAR IF THE CONDUIT SHOWN ON THE DWG E300 #1 IS THE CONDUIT TO BE USED?**
   THERE IS AN EXISTING UNDERGROUND CONDUIT CONNECTING POLICE MEMORIAL VAULT AND NORTH COVE VAULT. THIS CONDUIT WILL BE REUSED AS MUCH AS POSSIBLE (EXISTING CABLES WILL BE REMOVED, CONDUIT CLEANED, AND MODIFIED AS PER FIELD CONDITIONS). CONTRACTOR TO EXTEND/SHORTEN THIS CONDUIT AS REQUIRED, PROVIDE PULL BOXES ON BOTH ENDS, ETC.
   ALL SURFACE MOUNTED CONDUITS AND BOXES INSIDE THE POLICE MEMORIAL VAULT WILL BE NEW. ALL RACEWAYS IN NORTH COVE VAULT WILL BE NEW. PATH BETWEEN THE TWO VAULTS WILL BE REUSED (RESTORED), AS MUCH AS POSSIBLE.
   BOTTOM LINE IS THAT THE CONTROL EQUIPMENT INCLUDING LIGHTING CONTROLS FOR POLICE MEMORIAL WILL BE LOCATED IN NEW ABOVE THE GROUND UTILITY STRUCTURES.

4. **WHAT IS THE CABLE TRAY SHOWN ON DWG E600 USED FOR?**
   EXISTING MARINE TYPE CABLES IN THE NORTH COVE VAULT WERE INSTALLED ON CABLE TRAYS WITHOUT CONDUIT. (SEE ATTACHED PICTURE). CABLE TRAY WILL BE REQUIRED FOR CABLE RUNS BETWEEN UNDERGROUND DUCT AND THE PULL BOX(ES) OR TERMINATION POINT OF MARINE TYPE CABLES, IF NO SPLICE BOXES ARE USED.

5. **THE EXTENSIONS ON FEEDERS TO MARINA ARE CONFUSING. ARE WE TO EXTEND NEW CONDUIT AND FEEDERS FROM NEW LOCATION TO THE OLD LOCATION? SHOULD WE INSTALLING A PULL BOX AT THE OLD LOCATION AND SPLICE EXISTING WIRES TO NEW WITH MARINE SPLICES.**
   WE HAVE TO EXTEND THE EXISTING MARINE TYPE CABLES (SERVING MARINA POWER PEDESTALS) FROM NORTH UTILITY COVE VAULT UP TO NEW ABOVE GROUND UTILITY STRUCTURES AND TERMINATE IT AT DISTRIBUTION BOARDS (SUBMETERED).
   SEE E-600 FOR ADDITIONAL INFORMATION. NEW NEMA 6P PULL BOX AND MARINE TYPE SPLICES WERE INDICATED .

6. **WHAT IS THE SIZE OF THE TROUGH TO BE USED FOR MARINA FEEDERS?**
   THERE IS NO THROUGH INDICATED FOR MARINA FEEDERS. OTHER THROUGH FOR 16#600MCM + 4#250G IS 12" X10" .

ALTERATIONS OR ADDITIONS TO THIS ENGINEERING DOCUMENT BY AN UNLICENSED PERSON IS A VIOLATION OF CHAPTER 16, TITLE VIII, ARTICLE

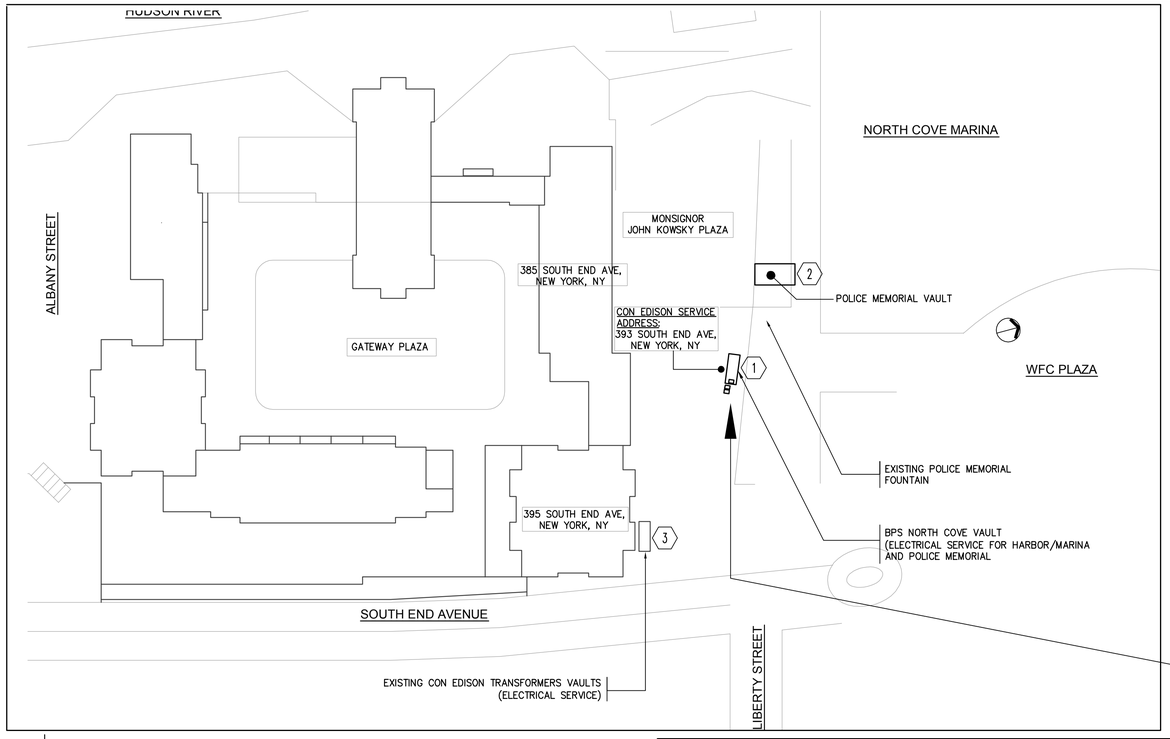

1 POLICE MEMORIAL PLAZA / KOWSKY PLAZA

SCALE: N.T.S.

LEGEND:

1. BPS NORTH COVE VAULT (ELECTRICAL SERVICE FOR HARBOR/MARINA AND POLICE MEMORIAL
2. POLICE MEMORIAL VAULT
3. EXISTING CON EDISON ELECTRICAL VAULT – GATEWAY

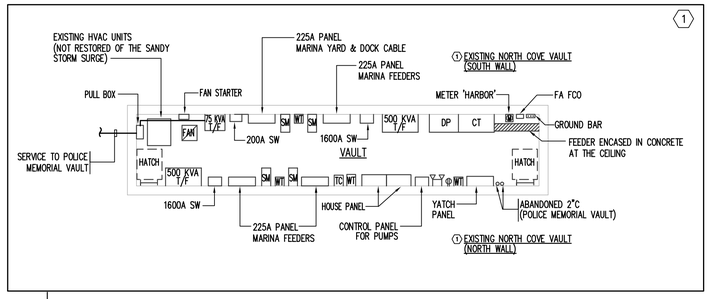

2 NORTH COVE VAULT - EXISTING LAYOUT

SCALE: 1/4" = 1'-0"



3 BPC NORTH COVE VAULT - EXISTING CONDITIONS

SCALE: N.T.S.

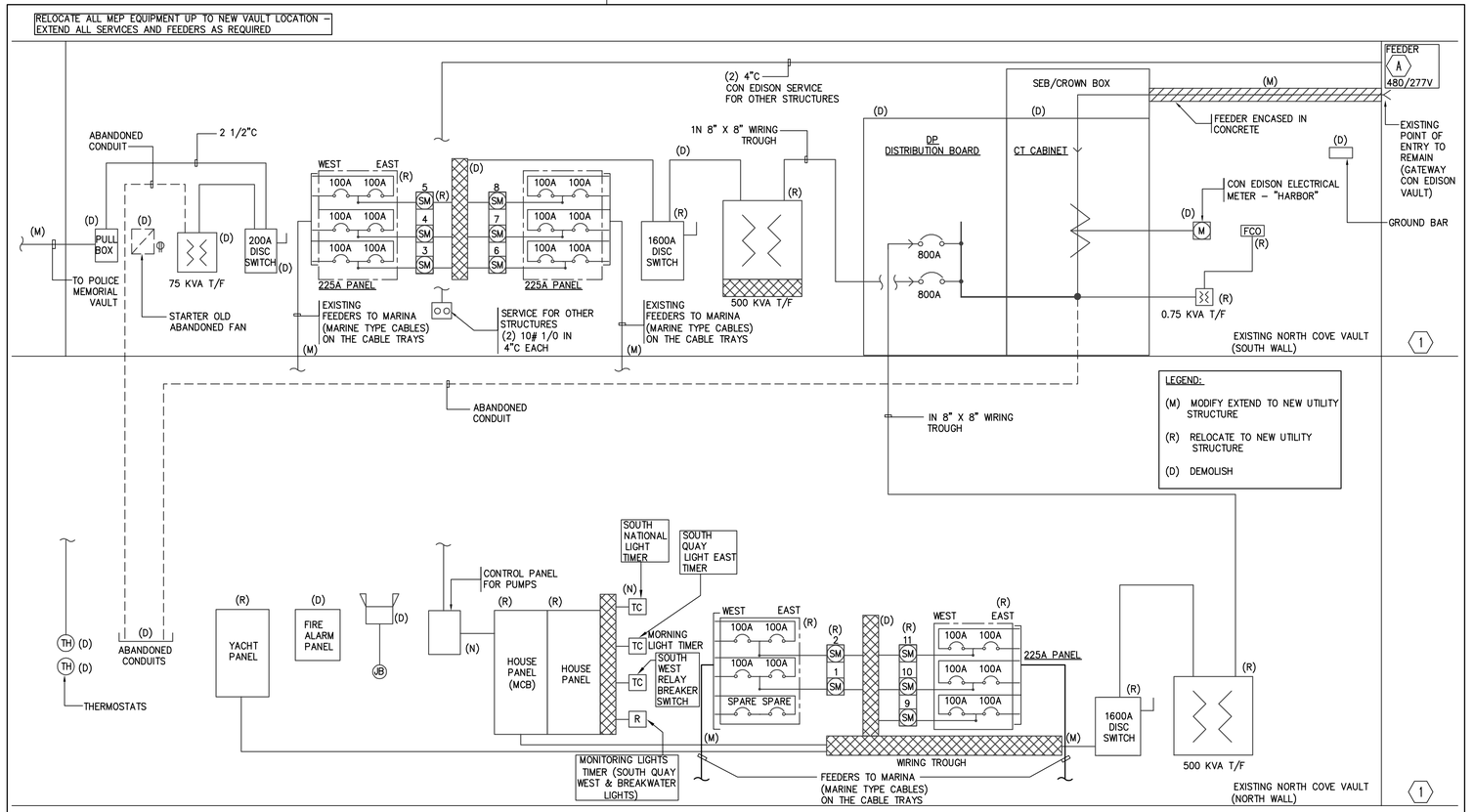

4 ONE LINE DIAGRAM - NORTH COVE VAULT (EXISTING CONDITIONS)

SCALE: N.T.S.

ALTERATIONS OR ADDITIONS TO THIS ENGINEERING DOCUMENT BY AN UNLICENSED PERSON IS A VIOLATION OF CHAPTER 16, TITLE VIII, ARTICLE 145 § 7209.2 OF THE NEW YORK STATE EDUCATION LAW.

* THIS PLAN APPROVED ONLY FOR WORK INDICATED ON THE APPLICATION SPECIFICATION SHEET. ALL OTHER MATTERS SHOWN ARE NOT TO BE RELIED UPON, OR TO BE CONSIDERED AS EITHER BEING APPROVED OR IN ACCORDANCE WITH

hMa
hanrahan Meyers architect,llp

ARCHITECT:
HANRAHAN MEYERS ARCHITECTS, LLP
6 MAIDEN LANE SUITE 510
NEW YORK, NY 10038
T: (212) 989-6026 F: (917) 591-9825

Cosentini

MEP ENGINEERS:
Cosentini Associates
Two Pennsylvania Plaza – Third Floor
NEW YORK, NY 10121
T: (212) 615-3760 F: (212) 615-3600

Thornton Tomasetti

STRUCTURAL ENGINEERS:
Thornton Tomasetti
51 Madison Avenue
NEW YORK, NY 10010
T: (917) 661-7800 F: (917) 661-7801

EKA PLLC

LANDSCAPE ARCHITECTS:
Elizabeth Kennedy Landscape Architect, PLLC
Brooklyn Navy Yard Building 275 Room 202
63 Flushing Avenue Unit 264
BROOKLYN, NY 11205
T: (718) 569-8637 F: (718) 709-5885

PROJECT:

Kowsky Plaza Repair

401 South End Avenue
New York, NY 10280

PROPERTY INFORMATION:

NOTES:

Rev No.	Description	Date
	BID SET	11.15.15

DOB STAMPS AND SIGNATURE:

SEAL AND SIGNATURE:

DATE:

DRAWN BY: BM

CHECKED BY: SB

SHEET TITLE:
EXISTING ELECTRICAL SERVICES AND DISTRIBUTION EQUIP SERVING POLICE PLAZA

PAGE OF

SHEET NUMBER:

E-100.00

PLOTTED BY MARTIN, BENJAMIN
FILE NAME: I:\140143\Electrical\140143 E-100.dwg SAVED ON 11/24/2015 3:11 PM PLOTTED ON 11/24/2015 3:34 PM

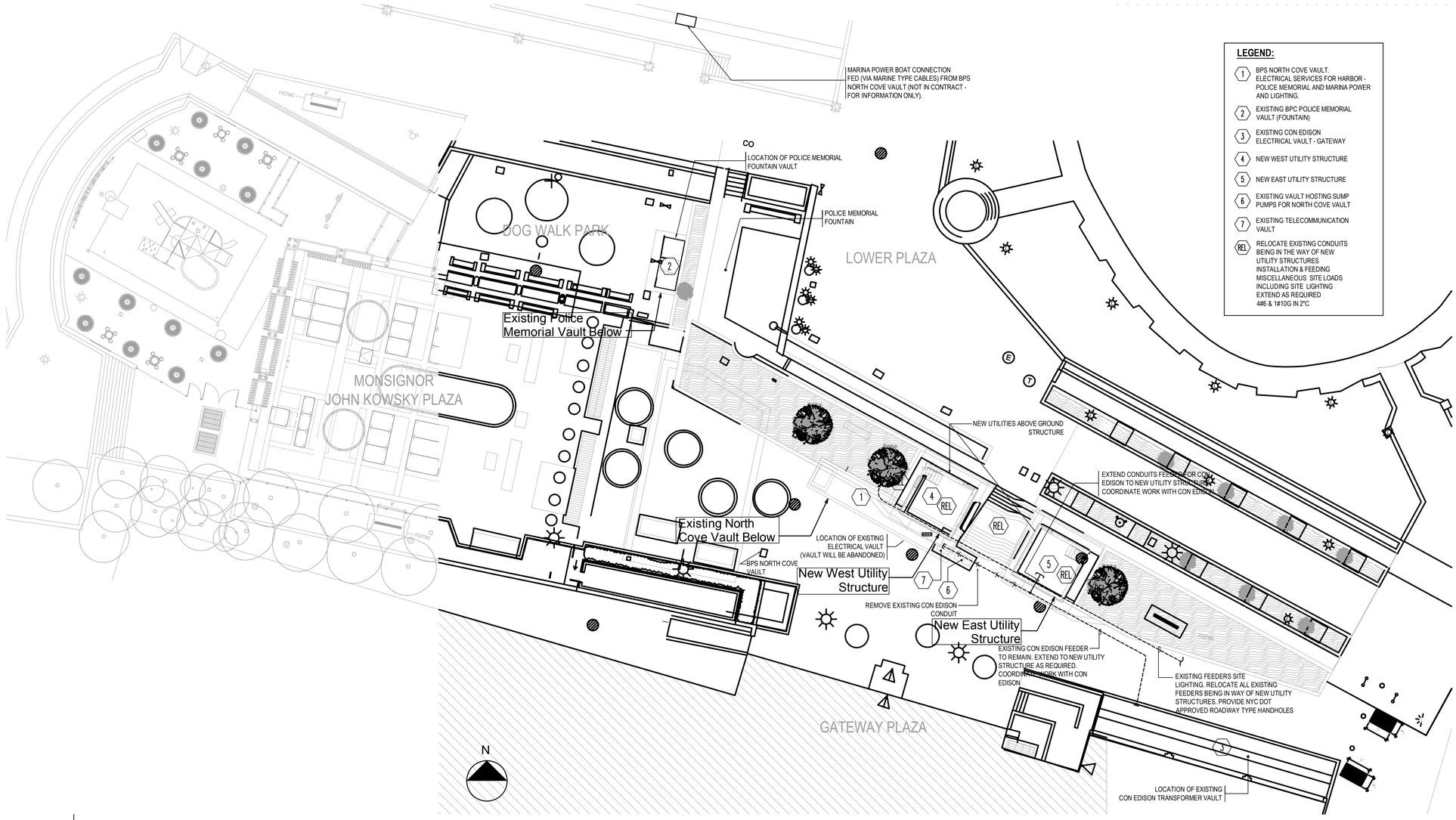

1 PROPOSED LOCATIONS OF NEW POLICE MEMORIAL PLAZA VAULTS

SCALE: 1/16" = 1'-0"

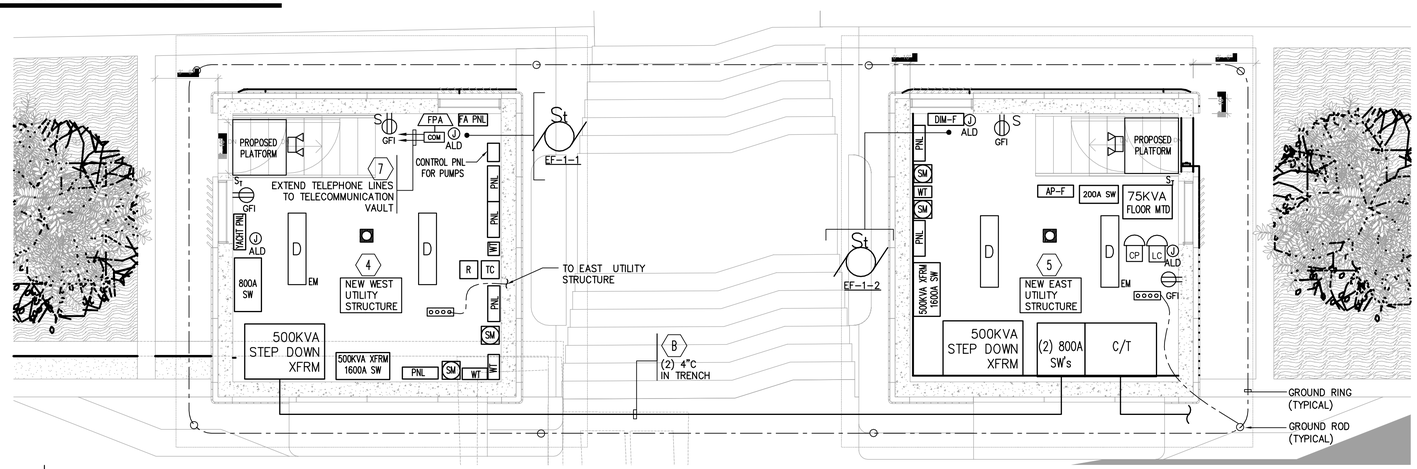

2 NEW UTILITIES STUCTURES DETAILS

SCALE: 1/4" = 1'-0"

ALTERATIONS OR ADDITIONS TO THIS ENGINEERING DOCUMENT BY AN UNLICENSED PERSON IS A VIOLATION OF CHAPTER 16, TITLE VIII, ARTICLE 145 § 7209.2 OF THE NEW YORK STATE EDUCATION LAW.

THIS PLAN APPROVED ONLY FOR WORK INDICATED ON THE APPLICATION SPECIFICATION SHEET. ALL OTHER MATTERS SHOWN ARE NOT TO BE RELIED UPON, OR TO BE CONSIDERED AS EITHER BEING APPROVED OR IN ACCORDANCE WITH APPLICABLE CODES

hMa
hanrahan Meyers architect,llp

ARCHITECT:
HANRAHAN MEYERS ARCHITECTS, LLP
6 MAIDEN LANE SUITE 510
NEW YORK, NY 10038
T: (212) 989-6026 F: (917) 591-9825

Cosentini

MEP ENGINEERS:
Cosentini Associates
Two Pennsylvania Plaza - Third Floor
NEW YORK, NY 10121
T: (212) 615-3760 F: (212) 615-3600

Thornton Tomasetti

STRUCTURAL ENGINEERS:
Thornton Tomasetti
51 Madison Avenue
NEW YORK, NY 10010
T: (917) 661-7800 F: (917) 661-7801

EKA PLLC

LANDSCAPE ARCHITECTS:
Elizabeth Kennedy Landscape Architect, PLLC
Brooklyn Navy Yard Building 275 Room 202
63 Flushing Avenue Unit 264
BROOKLYN, NY 11205
T: (718) 569-8637 F: (718) 709-5885

PROJECT:

Kowsky Plaza Repair

401 South End Avenue
New York, NY 10280

PROPERTY INFORMATION:

NOTES:

Rev No.	Description	Date
	BID SET	11.15.15

DOB STAMPS AND SIGNATURE:

SEAL AND SIGNATURE:

DATE:

DRAWN BY: BM

CHECKED BY: SB

SHEET TITLE:
ELECTRICAL MODIFICATION OF EXISTING ELECT. SERVICE & DIST. EQUIPMENT SERVING POLICE PLAZA & MARINE (FLOOD RESILIENCE)

SHEET NUMBER:

E-200.00

FILE NAME: I:\140143\Electrical\140143 E-200.dwg SAVED ON 11/24/2015 3:32 PM PLOTTED ON 11/24/2015 3:35 PM PLOTTED BY MARTIN, BENJAMIN

LEGEND:

1. BPS NORTH COVE VAULT. ELECTRICAL SERVICES FOR HARBOR POLICE MEMORIAL AND MARINA POWER AND LIGHTING
2. EXISTING POLICE MEMORIAL VAULT (CIRCULATING PUMPS, SUMP PUMPS)
6. EXISTING VAULT HOSTING SUMP PUMPS FOR NORTH COVE VAULT
7. EXISTING TELECOMMUNICATION VAULT

NOTE:

AA. ALL SUBMERSIBLE PUMPS, PROVIDED BY PLUMBING TRADE, WILL BE FIELD ASSEMBLED.
ELECTRICAL CONTRACTOR SHALL INSTALL PUMP CONTROLLER (DUPLEX/TRIPLEX) AND ALL LINE AND LOW VOLTAGE CONTROL WIRING REQUIRED FOR PROPER OPERATION AND CONTROL BETWEEN REMOTE PUMPS CONTROLLER (LOCATED ABOVE FLOOD LEVEL IN THE UTILITY STRUCTURE) AND
- LOCAL DISCONNECT MEANS PUMP No. 1
- LOCAL DISCONNECT MEANS PUMP No. 2
- LOCAL DISCONNECT MEANS PUMP No. 3 (FOR TRIPLEX PUMPS ONLY)
- HIGH WATER ALARM FLOAT SWITCH
- PUMP No. 1 FLOAT SWITCH
- PUMP No. 2 FLOAT SWITCH
- PUMP No. 3 FLOAT SWITCH (FOR TRIPLEX PUMPS ONLY)

(PUMPS OFF, PUMP No. 1 ON, PUMP No. 2 ON, PUMP No. 3 ON, HIGH WATER ALARM).
FIELD COORDINATE EXACT SCOPE WITH PLUMBING CONTRACTOR.

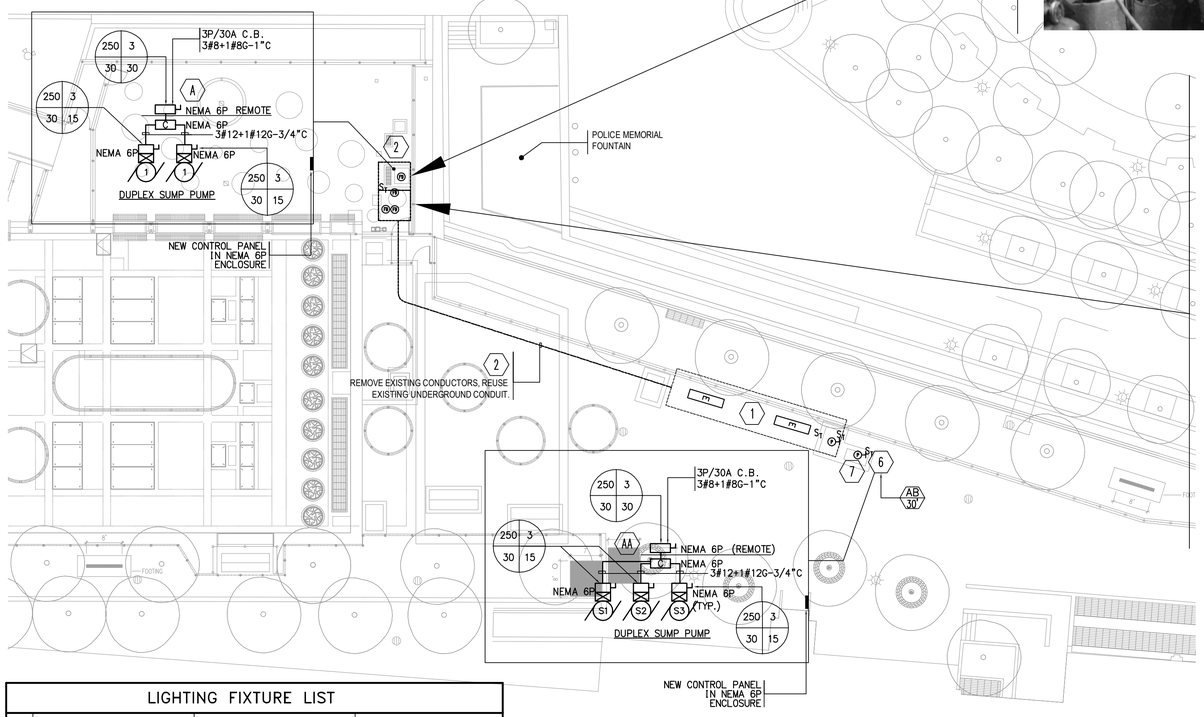

1 POLICE MEMORIAL PLAZA VAULT - ELECTRICAL WORK

SCALE: 1/16" = 1'-0"

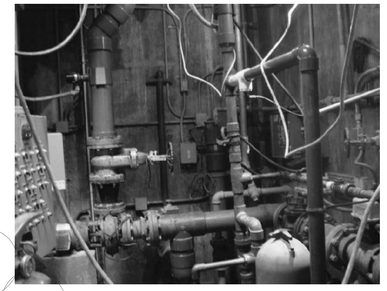

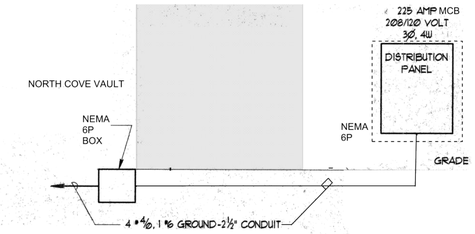

2 RESTORE EXISTING ELECTRICALSERVICE AND DISTRIBUTION SYSTEM

SCALE: N.T.S

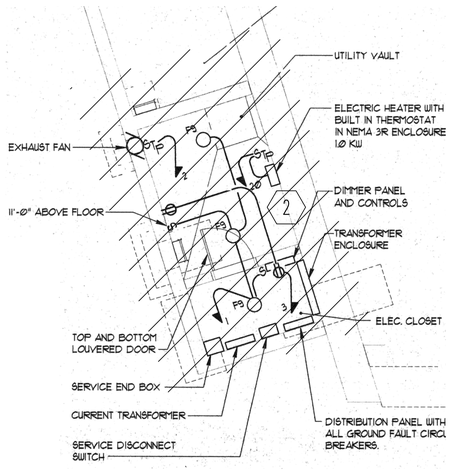

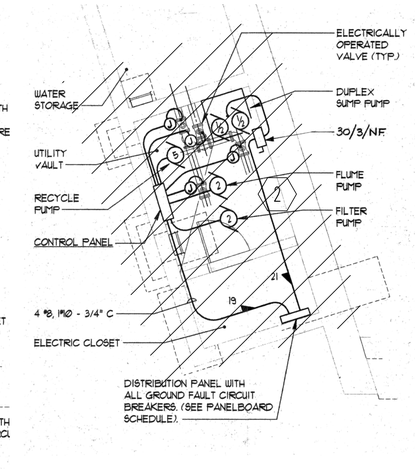

3 BPC POLICE MEMORIAL VAULT - MECHANICAL & ELECTRICAL DEMO

SCALE: N.T.S

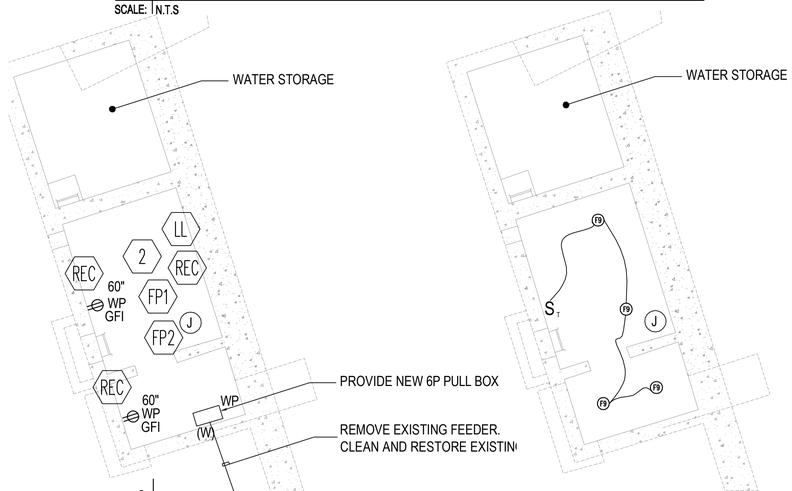

4 BPC POLICE MEMORIAL VAULT - MECHANICAL & ELECTRICAL DETAIL

SCALE: N.T.S

LIGHTING FIXTURE LIST

FIXTURE TYPE DESIGNATION	FIXTURE DESCRIPTION	FIXTURE MANUFACTURERS & CATALOG NUMBERS (CATALOG NUMBERS MAY REQUIRE ADJUSTMENT TO CONFORM FIXTURE TO CEILING FINAL CONSTRUCTION)	LAMPS		FIXTURE INPUT	
			QUANTITY PER FIXTURE	DESIGNATION (LAMP MANUFACTURERS CATALOG NO. ABBREVIATION)	VOLTS	VOLT AMPS
F3/F9 (F9)	VAPORTIGHT INCANDESCENT JAR LIGHT. WALL OR CEILING MOUNTED AS INDICATED ON DRAWINGS. UL AND WET LOCATION LISTED.	CEILING-MOUNT: CANLET 02-20-L-W-F OG-18 OR APPROVED EQUAL	1	20W LED	120	20
D	4' SURFACE OR PENDANT MOUNTED FLUORESCENT INDUSTRIAL FIXTURE WITH WHITE BAKED ENAMEL REFLECTOR. REFLECTOR ALLOWS 10%-20% UPLIGHT.	DAYBRITE N1F232-PP-1/2-EB-120; COLUMBIA KL-4-232-EB8-120-NY-20GA; METALUX DIM-232-120-EB81-20GA-REP; CROWNLITE 100-232-117. (WITH GUARD)	2	F032/835 ECO.	120	64
E	COLUMBIA LIGHTING OR APPROVED EQUAL. VAPOR TIGHT INDUSTRIAL	VAPORTIGHT MODEL # XEP-4-2-32-E-U-EL141/TP/SSL/ SWH/HT	2	T832	120/277	64
P-H	KILLARK LED VSL VAPOR TIGHT OR APPROVED EQUAL USE TEMPERED GLASS GLOBES FOR WET LOCATION APPLICATIONS	VAPORTIGHT MODEL # VSL-16-30-F2-H-G-W-S	1	LED	120/277	16
A	DECO LIGHTING OR APPROVED EQUAL PARK LIGHT SUITABLE FOR WET LOCATION APPLICATIONS	SIG7-LED 2-2	1	LED	120/277	9
B	DECO LIGHTING OR APPROVED EQUAL PARK LIGHT SUITABLE FOR WET LOCATION APPLICATIONS	SIG7-LED 2-2	1	LED	120/277	3

ALTERATIONS OR ADDITIONS TO THIS ENGINEERING DOCUMENT BY AN UNLICENSED PERSON IS A VIOLATION OF CHAPTER 16, TITLE VIII, ARTICLE 145 § 7209.2 OF THE NEW YORK STATE EDUCATION LAW.

* THIS PLAN APPROVED ONLY FOR WORK INDICATED ON THE APPLICATION SPECIFICATION SHEET. ALL OTHER MATTERS SHOWN ARE NOT TO BE RELIED UPON, OR TO BE CONSIDERED AS EITHER BEING APPROVED OR IN ACCORDANCE WITH

hMa
hanrahan Meyers architect,llp

ARCHITECT:
HANRAHAN MEYERS ARCHITECTS, LLP
6 MAIDEN LANE SUITE 510
NEW YORK, NY 10038
T: (212) 989-6026 F: (917) 591-9825

Cosentini

MEP ENGINEERS:
Cosentini Associates
Two Pennsylvania Plaza – Third Floor
NEW YORK, NY 10121
T: (212) 615-3760 F: (212) 615-3600

Thornton Tomasetti

STRUCTURAL ENGINEERS:
Thornton Tomasetti
51 Madison Avenue
NEW YORK, NY 10010
T: (917) 661-7800 F: (917) 661-7801

EKLA PLLC

LANDSCAPE ARCHITECTS:
Elizabeth Kennedy Landscape Architect, PLLC
Brooklyn Navy Yard Building 275 Room 202
63 Flushing Avenue Unit 264
BROOKLYN, NY 11205
T: (718) 569-8837 F: (718) 709-5885

PROJECT:

Kowsky Plaza Repair

401 South End Avenue
New York, NY 10280

PROPERTY INFORMATION:

NOTES:

Rev No.	Description	Date
	BID SET	11.15.15

DOB STAMPS AND SIGNATURE:

SEAL AND SIGNATURE:

DATE:

DRAWN BY: BM

CHECKED BY: SB

SHEET TITLE:
ELECTRICAL ELECT WORK IN CONNECTION W/ POLICE MEMORIAL PLAZA PUMPS & CONTROLLERS RELOCATION

SHEET NUMBER:

E-300.00

FILE NAME: I:\140143\Electrical\140143 E-300.dwg SAVED ON 11/24/2015 3:26 PM PLOTTED ON 11/24/2015 3:36 PM PLOTTED BY MARTIN, BENJAMIN

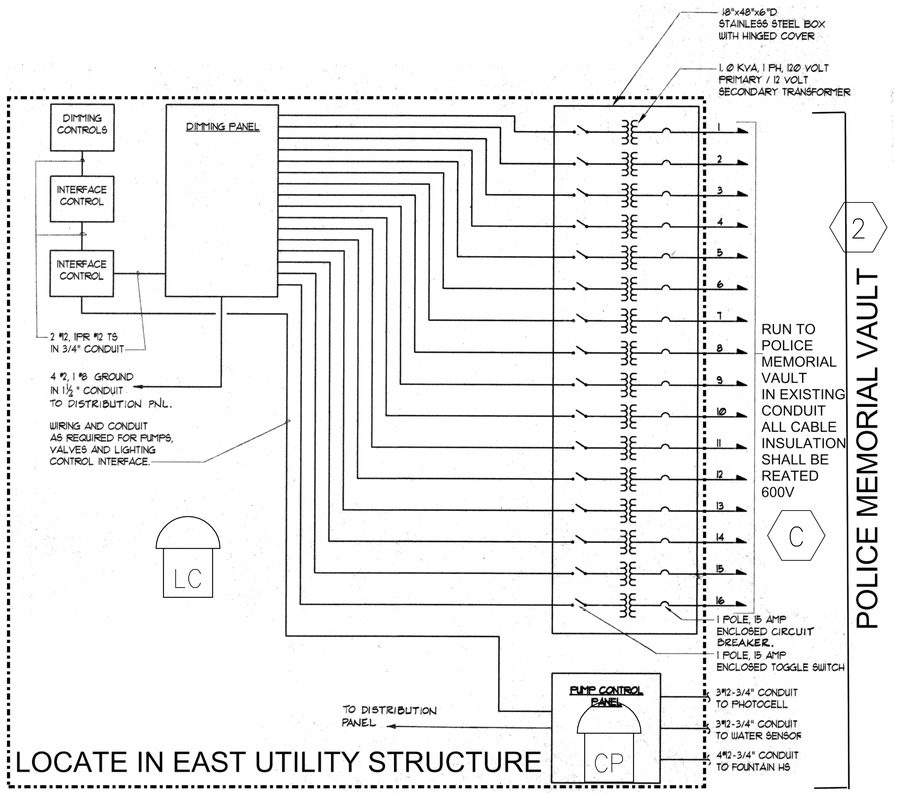

1 RESTORE EXISTING POLICE MEMORIAL LIGHTING CONTROL SYSTEM

SCALE: I.N.T.S

DISTRIBUTION PANEL SCHEDULE AP-F — VOLTS: 208/120-3Ø, 4W — MAINS: 225 AMP MCB

CIRCUIT NUMBER	CIRCUIT BREAKER POLES	FRAME	TRIP	DESCRIPTION	WIRE/CONDUIT	VOLT AMPS	PHASE LOAD A	B	C	VOLT AMPS	WIRE/CONDUIT	DESCRIPTION	CIRCUIT BREAKER TRIP	FRAME	POLES	CIRCUIT NUMBER
1	15	100	1	VAULT LIGHTS	2 #12, 1#12-3/4"C	96	480			384	2 #12, 1#12-3/4"C	EXHAUST FAN	15	100	1	2
3	15	100	1	VAULT RECEPT.	2 #12, 1#12-3/4"C	360		460		100	——	SPARE	15	100	1	4
5	15	100	1	LIGHTING	2#12, 1#12-3/4"C	100			200	100	——	SPARE	15	100	1	6
7	15	100	1	LIGHTING	2#12, 1#12-3/4"C	100	200			100	——	SPARE	15	100	1	8
9	15	100	1	SPARE	——	100		200		100	——	SPARE	15	100	1	10
11	15	100	1	SPARE	——	100			200	100	——	SPARE	15	100	1	12
13	15	100	1	SPARE	——	100	200			100	——	SPARE	15	100	1	14
15	15	100	1	SPARE	——	100		200		100	——	SPARE	15	100	1	16
17	15	100	1	SPARE	——	100			200	100	——	SPARE	15	100	1	18
19	40	100	3	PUMP PANEL	4 #8, 1#10- 1 "C	14400	5167	5167	5167	1100	3 #12, 1#12-3/4"C	ELECTRIC HEATER	15	100	1	20
21	20	100	3	SUMP PUMP	3 #12, 1#12-3/4"C	1656	2795	2795	2795	6730	4 #2, 1#8 - 1½"C	DIMMER PANEL	100	100	3	22

DIMMER PANEL SCHEDULE DIM-F — VOLTS: 208/120-3Ø, 4W — MAINS: 100 AMP

CIRCUIT NUMBER	CIRCUIT BREAKER POLES	FRAME	TRIP	DESCRIPTION	WIRE/CONDUIT	VOLT AMPS	PHASE LOAD A	B	C	VOLT AMPS	WIRE/CONDUIT	DESCRIPTION	CIRCUIT BREAKER TRIP	FRAME	POLES	CIRCUIT NUMBER
1	15	100	1	F6 NICHE	#10 AWG / 3/4"	50	800			750	#8 AWG / 1"	F2-FLAGPOLE	15	100	1	2
3	15	100	1	F3 RAMP/PLANTER	#8 AWG / 1"	300		1050		750	#8 AWG / 1"	F2-FLAGPOLE	15	100	1	4
5	15	100	1	F1-POOL	#10 AWG / 3/4"	500			550	50	#10 AWG / 3/4"	F5-POOL	15	100	1	6
7	15	100	1	F1-POOL	#10 AWG / 3/4"	450	950			500	#10 AWG / 3/4"	F4-PLAZA	15	100	1	8
9	15	100	1	F8-RAMP	#8 AWG / 1"	500		1000		500	#10 AWG / 3/4"	F4-PLAZA	15	100	1	10
11	15	100	1	F4-PLAZA	#10 AWG / 3/4"	400			750	350	#10 AWG / 3/4"	F4-PLAZA	15	100	1	12
13	15	100	1	F7-PLAZA	#10 AWG / 3/4"	450	850			400	#10 AWG / 3/4"	F4-PLAZA	15	100	1	14
15	15	100	1	F7-POOL	#8 AWG / 1"	300		600		300	#8 AWG / 1"	F7-FOUNTAIN	15	100	1	16
17	15	100	1	RECEPTACLE NON-DIMMED	#8 AWG / 1"	180			180			SPARE	15	100	1	18
19	15	100	1	SPARE								SPARE	15	100	1	20
21	15	100	1	SPARE								SPARE	15	100	1	22
23	15	100	1	SPARE								SPARE	15	100	1	24

LOCATE IN EAST UTILITY STRUCTURE

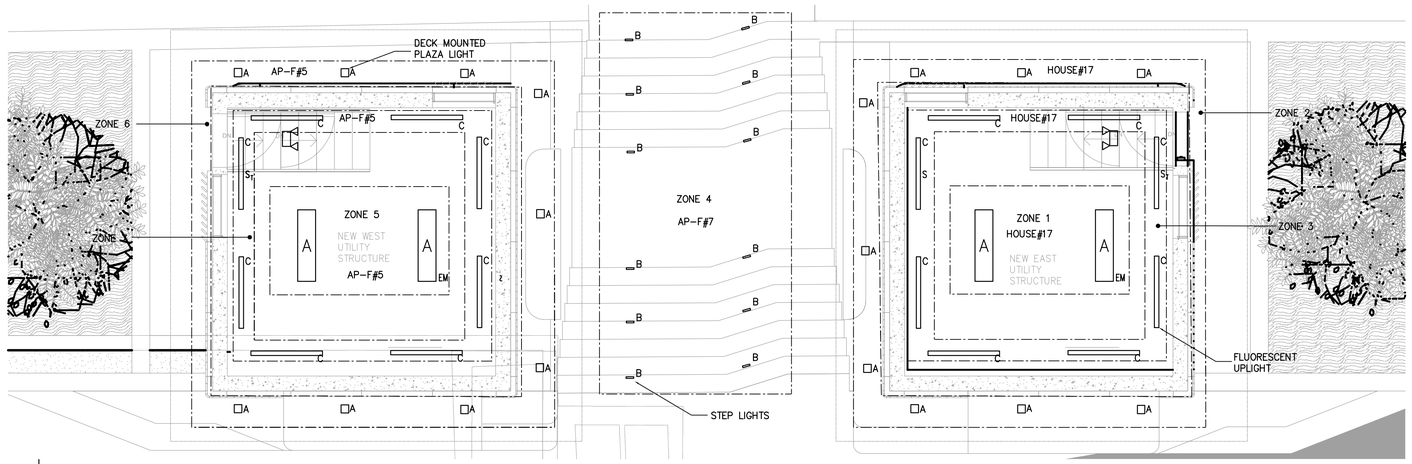

2 NEW UTILITIES STUCTURES LIGHTING DETAILS

SCALE: 1/4" = 1'-0"

ALTERATIONS OR ADDITIONS TO THIS ENGINEERING DOCUMENT BY AN UNLICENSED PERSON IS A VIOLATION OF CHAPTER 16, TITLE VIII, ARTICLE 145 § 7209.2 OF THE NEW YORK STATE EDUCATION LAW.

*THIS PLAN APPROVED ONLY FOR WORK INDICATED ON THE APPLICATION SPECIFICATION SHEET. ALL OTHER MATTERS SHOWN ARE NOT TO BE RELIED UPON, OR TO BE CONSIDERED AS EITHER BEING APPROVED OR IN ACCORDANCE WITH

hMa
hanrahan Meyers architect,llp

ARCHITECT:
HANRAHAN MEYERS ARCHITECTS, LLP
6 MAIDEN LANE SUITE 510
NEW YORK, NY 10038
T: (212) 989-6026 F: (917) 591-9825

Cosentini

MEP ENGINEERS:
Cosentini Associates
Two Pennsylvania Plaza – Third Floor
NEW YORK, NY 10121
T: (212) 615-3760 F: (212) 615-3600

Thornton Tomasetti

STRUCTURAL ENGINEERS:
Thornton Tomasetti
51 Madison Avenue
NEW YORK, NY 10010
T: (917) 661-7800 F: (917) 661-7801

EKLA PLLC

LANDSCAPE ARCHITECTS:
Elizabeth Kennedy Landscape Architect, PLLC
Brooklyn Navy Yard Building 275 Room 202
63 Flushing Avenue Unit 264
BROOKLYN, NY 11205
T: (718) 569-8637 F: (718) 709-5885

PROJECT:
Kowsky Plaza Repair
401 South End Avenue
New York, NY 10280

PROPERTY INFORMATION:

NOTES:

Rev No.	Description	Date
	BID SET	11.15.15

DOB STAMPS AND SIGNATURE:

SEAL AND SIGNATURE:

DATE:

DRAWN BY: BM

CHECKED BY: SB

SHEET TITLE:
ELECTRICAL
ELECT WORK IN CONNECTION W/ POLICE MEMORIAL PLAZA PUMPS & CONTROLLERS RELOCATION DETAILS

SHEET NUMBER:
E-400.00

FILE NAME I:\140143\Electrical\140143 E-400.dwg SAVED ON 11/24/2015 4:10 PM PLOTTED ON 11/24/2015 4:12 PM PLOTTED BY MARTIN, BENJAMIN

PANEL SCHEDULE

SUPPLY CHARACTERISTICS: VOLTS: 120/208 PHASE: 3φ WIRES: 4+G PANEL DESIGNATION:
MAIN BUS RATING: 225A W.EQP. GR. BUS **YACHT PANEL**
MAIN PROTECTIVE DEVICE: 225A (J) **(SECTION I)**

CKT. #	TRIP (AMPS)	DESCRIPTION OF LOAD	LOAD (VA)	A	B	C	LOAD (VA)	DESCRIPTION OF LOAD	TRIP (AMPS)	CKT. #
1	20	EXISTING LOAD	1440	2880			1440	EXISTING LOAD	20	2
3	20	EXISTING LOAD	1440		2880		1440	EXISTING LOAD	20	4
5	20	EXISTING LOAD	1440			2880	1440	EXISTING LOAD	20	6
7	20	EXISTING LOAD	1440	2880			1440	EXISTING LOAD	20	8
9	20	EXISTING LOAD	1440		2880		1440	EXISTING LOAD	20	10
11	20	EXISTING LOAD	1440			2880	1440	EXISTING LOAD	20	12
13	20	EXISTING LOAD	1440	2880			1440	EXISTING LOAD	20	14
15	20	EXISTING LOAD	1440		2880		1440	EXISTING LOAD	20	16
17	20	EXISTING LOAD	1440			2880	1440	EXISTING LOAD	20	18
19	20	EXISTING LOAD	1440	2880			1440	EXISTING LOAD	20	20
21	20	EXISTING LOAD	1440		2880		1440	EXISTING LOAD	20	22
23	20	EXISTING LOAD	1440			2880	1440	EXISTING LOAD	20	24
25	20	EXISTING LOAD	1440	2880			1440	EXISTING LOAD	20	26
27	20	EXISTING LOAD	1440		2880		1440	EXISTING LOAD	20	28
29	20	EXISTING LOAD	1440			2880	1440	EXISTING LOAD	20	30
31	20	EXISTING LOAD	1440	2880			1440	EXISTING LOAD	20	32
33	20	EXISTING LOAD	1440		2880		1440	EXISTING LOAD	20	34
35	20	EXISTING LOAD	1440			2880	1440	EXISTING LOAD	20	36
37	20	EXISTING LOAD	1440	2880			1440	EXISTING LOAD	20	38
39	20	EXISTING LOAD	1440		2880		1440	EXISTING LOAD	20	40
41	20	EXISTING LOAD	1440			2880	1440	EXISTING LOAD	20	42
		TOTAL VA BY PHASE:	20160	20160	20160		TOTAL CONNECTED LOAD:		60.5	KVA
									167.9	AMPS

(A) (A) (I)

PANEL SCHEDULE

SUPPLY CHARACTERISTICS: VOLTS: 120/208 PHASE: 3φ WIRES: 4+G PANEL DESIGNATION:
MAIN BUS RATING: 225A W.EQP. GR. BUS **HOUSE**
MAIN PROTECTIVE DEVICE: 225A (J) **(SECTION I)**

CKT. #	TRIP (AMPS)	DESCRIPTION OF LOAD	LOAD (VA)	A	B	C	LOAD (VA)	DESCRIPTION OF LOAD	TRIP (AMPS)	CKT. #
1	20	EXISTING LOAD	1200	1650			450	EXISTING LOAD	20	2
3	20	EXISTING LOAD	1200		2100		900	EXISTING LOAD	20	4
5	20	EXISTING LOAD	1200			2280	1080	EXISTING LOAD	20	6
7	20	EXISTING LOAD	600	1050			450	EXISTING LOAD	20	8
9	20	EXISTING LOAD	600		1140		540	EXISTING LOAD	20	10
11	20	EXISTING LOAD	600			960	360	EXISTING LOAD	20	12
13	20	EXISTING LOAD	600	1050			450	EXISTING LOAD	20	14
15	20	EXISTING LOAD	600		960		360	EXISTING LOAD	20	16
17	20	LIGHTING	250			250	0	SPACE	-	18
19	-	SPACE	0	0			0	SPACE	-	20
21	-	SPACE	0		0		0	SPACE	-	22
23	-	SPACE	0			0	0	SPACE	-	24
25	-	SPACE	0	0			0	SPACE	-	26
27	-	SPACE	0		0		0	SPACE	-	28
29	-	SPACE	0			0	0	SPACE	-	30
31	-	SPACE	0	0			0	SPACE	-	32
33	-	SPACE	0		0		0	SPACE	-	34
35	-	SPACE	0			0	0	SPACE	-	36
37	-	SPACE	0	0			0	SPACE	-	38
39	-	SPACE	0		0		0	SPACE	-	40
41	-	SPACE	0			0	0	SPACE	-	42

(A) (A) (I)

PANEL SCHEDULE

SUPPLY CHARACTERISTICS: VOLTS: 120/208 PHASE: 3φ WIRES: 4+G PANEL DESIGNATION:
MAIN BUS RATING: 225A W.EQP. GR. BUS **HOUSE**
MAIN PROTECTIVE DEVICE: 225A MLO **(SECTION II)**

CKT. #	TRIP (AMPS)	DESCRIPTION OF LOAD	LOAD (VA)	A	B	C	LOAD (VA)	DESCRIPTION OF LOAD	TRIP (AMPS)	CKT. #
43	60/3	EXISTING LOAD	5760	8640			2880	EXISTING LOAD	30/3	44
45			5760		8640		2880			46
47			5760			8640	2880			48
49	70/2	EXISTING LOAD	6720	13440			6720	EXISTING LOAD	70/2	50
51			6720		13440		6720			52
53	70/2	EXISTING LOAD	6720			8160	1440	EXISTING LOAD	15/2	54
55			6720	8160			1440			56
57	15/2	EXISTING LOAD	1440		2880		1440	EXISTING LOAD	20	58
59			1440			2880	1440	EXISTING LOAD	20	60
61	20	EXISTING LOAD	1440	2880			1440	EXISTING LOAD	20	62
63	20	EXISTING LOAD	1440		2880		1440	EXISTING LOAD	20	64
65	20	EXISTING LOAD	1440			2880	1440	EXISTING LOAD	20	66
67	20	EXISTING LOAD	1440	2880			1440	EXISTING LOAD	20	68
69	20	HEAT TRACE	150		150		-	SPACE	-	70
71	-	SPACE	-			0	-	SPACE	-	72
73	-	SPACE	-	0			-	SPACE	-	74
75	-	SPACE	-		0		-	SPACE	-	76
77	-	SPACE	-			0	-	SPACE	-	78
79	-	SPACE	-	0			-	SPACE	-	80
81	-	SPACE	-		0		-	SPARE	-	82
83	-	SPACE	-			0	-	SPARE	-	84
		TOTAL VA BY PHASE:	36000	27990	22560		TOTAL CONNECTED LOAD:		97.8	KVA
									271.6	AMPS

(A) (B) (C) (D) (A) (I)

NOTES:

(A) EXTEND EXISTING BRANCH CIRCUIT WITH 2#10 & 1#10G THHW.2 IN 3/4"C. PROVIDE SPLICE BOX AND SPLICING KIT SUITABLE FOR MARINE TYPE ENVIRONMENT AND LISTED FOR PROLONGED SUBMERSION IN OCEAN WATER.

(B) EXTEND EXISTING BRANCH CIRCUIT WITH 4#8 & 1#10G THHW.2 IN 1"C. PROVIDE SPLICE BOX AND SPLICING KIT SUITABLE FOR MARINE TYPE ENVIRONMENT AND LISTED FOR PROLONGED SUBMERSION IN OCEAN WATER.

(C) EXTEND EXISTING BRANCH CIRCUIT WITH 3#3 & 1#8G THHW.2 IN 1-1/4"C. PROVIDE SPLICE BOX AND SPLICING KIT SUITABLE FOR MARINE TYPE ENVIRONMENT AND LISTED FOR PROLONGED SUBMERSION IN OCEAN WATER.

(D) EXTEND EXISTING BRANCH CIRCUIT WITH 3#10 & 1#10G THHW.2 IN 3/4"C. PROVIDE SPLICE BOX AND SPLICING KIT SUITABLE FOR MARINE TYPE ENVIRONMENT AND LISTED FOR PROLONGED SUBMERSION IN OCEAN WATER.

(E) EXTEND EXISTING BRANCH CIRCUIT WITH 4#4 & 1#8G THHW.2 IN 1-1/4"C. PROVIDE SPLICE BOX AND SPLICING KIT SUITABLE FOR MARINE TYPE ENVIRONMENT AND LISTED FOR PROLONGED SUBMERSION IN OCEAN WATER.

(F) EXTEND EXISTING BRANCH CIRCUIT WITH 3#12 & 1#12G THHW.2 IN 3/4"C FOR NEW/ REPLACED PUMP IN NORTH COVE VAULT – 50FT RUN. PROVIDE JUNCTION BOX AND SPLICING KIT SUITABLE FOR MARINE TYPE ENVIRONMENT AND LISTED FOR PROLONGED SUBMERSION IN OCEAN WATER. (INCLUDE THIS WORK AS PART OF THE SCOPE)

(G) EXTEND EXISTING BRANCH CIRCUIT WITH 3#12 & 1#12G THHW.2 IN 3/4"C FOR NEW/ REPLACED PUMP IN IT VAULT ADJACENT TO NORTH COVE VAULT – 50FT RUN. PROVIDE JUNCTION BOX AND SPLICING KIT SUITABLE FOR MARINE TYPE ENVIRONMENT AND LISTED FOR PROLONGED SUBMERSION IN OCEAN WATER. (INCLUDE THIS WORK AS PART OF THE SCOPE)

(H) INCLUDE INCIDENTAL WORK ASSOCIATED WITH EXTENTION OF EXISTING BRANCH CIRCUIT FEEDING POLE LIGHT (NEW UTILITY STRUCTURE BUILDINGS) – EXTEND WITH 4#6 & 1#10G RHW.2 IN 2"C – 100FT RUN. PROVIDE NYC DOT APPROVED HAND HOLE BOXES (2PCS) AND SPLICING KIT SUITABLE FOR MARINE TYPE ENVIRONMENT AND LISTED FOR PROLONGED SUBMERSION IN OCEAN WATER. (INCLUDE THIS WORK AS PART OF THE SCOPE).

(I) PROVIDE CIRCUIT BREAKERS TO MATCH EXISTING BRANCH CIRCUITS AS NEEDED. CIRCUIT BREAKERS SHALL BE AS PER PANEL MANUFACTURER RECOMMENDATION.

(J) PROVIDE MAIN CIRCUIT BREAKER AS REQUIRED.

PROVIDE PIPE HEATER STRIP OF REQUIRED LENGTH, WITH ALL APPURTENANCES, AND IN ACCORDANCE WITH THE FOLLOWING:

a) BASED ON THE INDICATED OUTPUT, SELECT HEATER STRIP AND AUXILIARY COMPONENTS FOR SAME FROM THE TABLE BELOW:–

ELECTRIC OUTPUT (AT 50°F)	CIRCUIT BREAKER SIZE (STARTED AT 50°F)	RATED VOLTAGE	MAXIMUM SAFE TEMPERATURE	MAXIMUM SAFE LENGTH	IDENTIFICATION OF APPROVED COMPONENTS			
					HEATER STRIP	END SEAL	SPLICE OR TEE KIT	POWER CONNECTION KIT
WATTS/FT	AMPS/FT	VOLTS	°F	FEET	RAYCHEM "XL–TRACE" CATALOG NUMBERS			
5	.07	120	150	250	5XL1–CR	FTC–E	FTC–HST	FTC–P
8	.10	120	150	190	8XL1–CR	FTC–E	FTC–HST	FTC–P

b) INSTALL HEATER STRIP AS A SINGLE RUN (OR MULTIPLE PARALLEL RUNS WHERE CABLE FOOTAGE SO REQUIRES) ALONG WATER PIPING BEFORE INSULATION IS APPLIED TO SAME.

c) FASTEN HEATER STRIP TO PIPING WITH GLASS ADHESIVE TAPE (RAYCHEM CAT. NO. "GT–66") APPLIED AT INTERVALS NOT EXCEEDING 1' ON CENTERS AND IN ALL CASES AS REQUIRED TO MAINTAIN THE HEATER STRIP IN CONTINUOUS CONTACT WITH THE METAL OF THE WATER PIPING.

d) DO NOT CONNECT THE BUS WIRES TOGETHER; XL–TRACE IS A PARALLEL CIRCUITED HEATER STRIP.

e) FURNISH AND INSTALL ON THE OUTLET BOX FROM WHICH THE HEATER IS SUPPLIED, A 120 VOLT, 22 AMP, SINGLE POLE, DOUBLE THROW, 25–225°F, AMBIENT TYPE THERMOSTAT (RAYCHEM CAT. NO. "AMC–1A") IN NEMA TYPE 4 WATERTIGHT ENCLOSURE.

f) CONNECT INCOMING CIRCUIT THROUGH THERMOSTAT TO HEATER STRIP.

g) UTILIZE 1/2" FLEXIBLE METALLIC CONDUIT TO PROTECT WIRE BETWEEN THERMOSTAT AND POINT WHERE IT CONNECTS TO HEATER STRIP.

h) WHERE THE TEMPERATURE OF THE FLUID IN A PIPE WILL EXCEED 150°F, SUBSTITUTE RAYCHEM "5XTV1–CT" STRIP OR "10XTV1–CT"S TRIP FOR 5 AND 8 WATT APPLICATIONS RESPECTIVELY, (AND ACCESSORIES) FOR HEATER STRIP SPECIFIED. MODIFY CIRCUITRY IF REQUIRED.

NOTE: A SEPARATE PIPE HEATER STRIP COMPLETE WITH THERMOSTAT AND ALL APPURTENANCES, IS REQUIRED IN CONJUNCTION WITH EACH SYMBOL FOR WHICH A REFERENCE TO THESE SPECIFICATIONS IS MADE. MULTIPLE CABLES MAY BE ATTACHED TO ONE THERMOSTAT, PROVIDED THAT THE TOTAL LENGTH OF CABLES DOESN'T EXCEED MAXIMUM SAFE LENGTH.

SPECIFICATION NOTES FOR ELECTRIC PIPE TRACING - DETAIL

LEGEND OF EQUIPMENT

IDENTIFICATION SYMBOL	EQUIPMENT DESCRIPTION	ELECTRICAL RATING								ELECTRICAL WORK NOTES REFERENCE SYMBOL
		KW	KVA	HP	EQUIPMENT AMPS	OUTLET AMPS	VOLTS	PHASE	WIRES	
AB 30'	HEAT TRACING CIRCUIT (30' – LENGTH)					–	120	1	2	(1) (2) (3) (4) (5)
LL	RESTORE POWER TO VAULT LIGHTS					–	120	1	2	(1) (2) (3)
REC	RESTORE POWER TO RECEPTACLES					–	120	1	2	(1) (2)
EF	RESTORE POWER TO EXHAUST FAN					–	120	1	2	(1) (2)
EH	RESTORE POWER TO ELECTRIC HEATER					–	120	1	2	(1) (2)
FP1	RESTORE POWER TO FLAME PUMP					–	208	3	3+G	(1) (2)
FP2	RESTORE POWER TO FOUNTAIN PUMP					–	208	3	3+G	(1) (2)
										(1) (2)
										(1) (2)
										(1) (2)

WORK NOTES FOR LEGEND OF EQUIPMENT ITEMS

(1) EXTEND INDICATED POWER CIRCUIT AND CONNECT SAME TO THE LINE TERMINALS OF THE EQUIPMENT--THE FINAL PORTION (NOT TO EXCEED 48" IN LENGTH) SHALL BE WITH FLEXIBLE METALLIC CONDUIT.

(2) PROVIDE ELECTRIC WORK AS PER DETAIL NOTED ON PLANS ADJACENT TO EQUIPMENT DESIGNATION SYMBOL.

(3) PROVIDE CONTROL CIRCUIT RUN FROM EQUIPMENT TO CONTROLLER LOCATED WHERE INDICATED ON THE PLANS -- RUN TO CONTAIN AN ADEQUATE NUMBER OF WIRES FOR THE PROPER EXTENSION OF SAFETY AND SINGLE OR MULTI STAGE THERMOSTATIC CONTROL.

(4) PROVIDE 5.0 WATTS PER LINEAR FOOT (OUTPUT RATING) PIPE HEATER STRIP AS PER DETAIL ON THIS DRAWING, NUMBER OF LENGTH AS NOTED ON PLAN WITHIN EQUIPMENT DESIGNATION SYMBOL.

(5) PROVIDE 8.0 WATTS PER LINEAR FOOT (OUTPUT RATING) PIPE HEATER STRIP AS PER DETAIL ON THIS DRAWING, NUMBER OF LENGTH AS NOTED ON PLAN WITHIN EQUIPMENT DESIGNATION SYMBOL.

ALTERATIONS OR ADDITIONS TO THIS ENGINEERING DOCUMENT BY AN UNLICENSED PERSON IS A VIOLATION OF CHAPTER 16, TITLE VIII, ARTICLE 145 § 7209.2 OF THE NEW YORK STATE EDUCATION LAW.

*THIS PLAN APPROVED ONLY FOR WORK INDICATED ON THE APPLICATION SPECIFICATION SHEET. ALL OTHER MATTERS SHOWN ARE NOT TO BE RELIED UPON, OR TO BE CONSIDERED AS EITHER BEING APPROVED OR IN ACCORDANCE WITH

hMa
hanrahan Meyers architect,llp

ARCHITECT:
HANRAHAN MEYERS ARCHITECTS, LLP
6 MAIDEN LANE SUITE 510
NEW YORK, NY 10038
T: (212) 989-6026 F: (917) 591-9825

Cosentini

MEP ENGINEERS:
Cosentini Associates
Two Pennsylvania Plaza – Third Floor
NEW YORK, NY 10121
T: (212) 615-3760 F: (212) 615-3600

Thornton Tomasetti

STRUCTURAL ENGINEERS:
Thornton Tomasetti
51 Madison Avenue
NEW YORK, NY 10010
T: (917) 661-7800 F: (917) 661-7801

EKLA PLLC

LANDSCAPE ARCHITECTS:
Elizabeth Kennedy Landscape Architect, PLLC
Brooklyn Navy Yard Building 275 Room 202
63 Flushing Avenue Unit 264
BROOKLYN, NY 11205
T: (718) 569-8637 F: (718) 709-5885

PROJECT:
Kowsky Plaza Repair
401 South End Avenue
New York, NY 10280

PROPERTY INFORMATION:

NOTES:

Rev No.	Description	Date
	BID SET	11.15.15

DOB STAMPS AND SIGNATURE:

SEAL AND SIGNATURE:

DATE:
DRAWN BY: BM
CHECKED BY: SB

SHEET TITLE:
ELECTRICAL WORK IN CONNECTION W/ POLICE MEMORIAL PLAZA PUMPS & CONTROLLERS RELOCATION
SCHEDULES/DTLS

SHEET NUMBER:
E-500.00

FILE NAME: I:\140143\Electrical\140143 E-500.dwg SAVED ON 11/24/2015 4:10 PM PLOTTED ON 11/24/2015 4:13 PM BY MARTIN, BENJAMIN

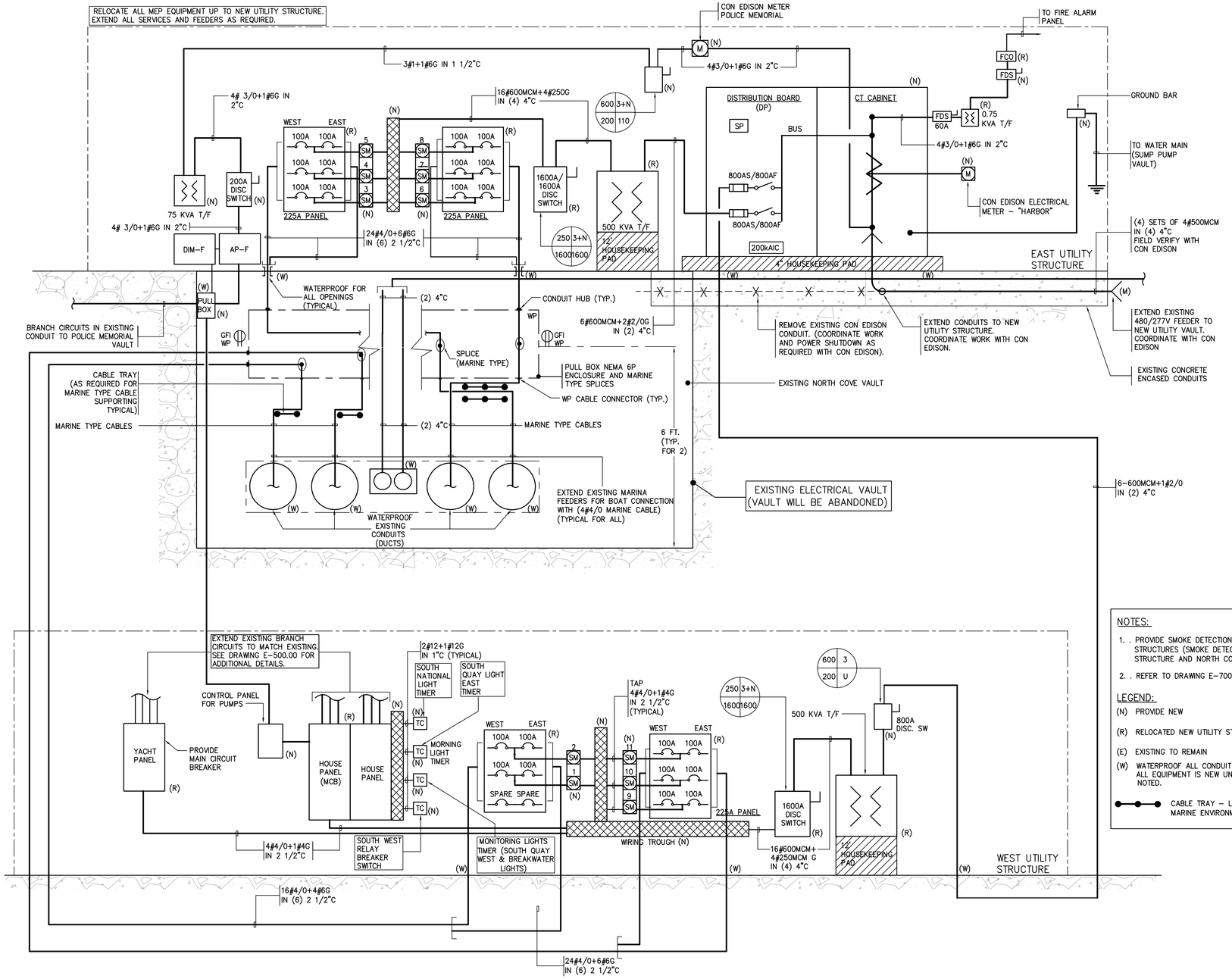

NOTES:

1. . PROVIDE SMOKE DETECTION DEVICES IN BOTH STRUCTURES (SMOKE DETECTORS FOR EACH UTILITY STRUCTURE AND NORTH COVE VAULT).
2. . REFER TO DRAWING E-700 FOR ADDITIONAL DETAILS

LEGEND:

(N) PROVIDE NEW

(R) RELOCATED NEW UTILITY STRUCTURE

(E) EXISTING TO REMAIN

(W) WATERPROOF ALL CONDUIT AND CABLES. ALL EQUIPMENT IS NEW UNLESS OTHERWISE NOTED.

CABLE TRAY – LISTED AND SUITABLE FOR MARINE ENVIRONMENT (MATCH EXISTING)

1 ONE LINE DIAGRAM - NEW UTILITIES WEST AND EAST STRUCTURES

SCALE: N.T.S.

ALTERATIONS OR ADDITIONS TO THIS ENGINEERING DOCUMENT BY AN UNLICENSED PERSON IS A VIOLATION OF CHAPTER 16, TITLE VIII, ARTICLE 145 § 7209.2 OF THE NEW YORK STATE EDUCATION LAW.

*THIS PLAN APPROVED ONLY FOR WORK INDICATED ON THE APPLICATION SPECIFICATION SHEET. ALL OTHER MATTERS SHOWN ARE NOT TO BE RELIED UPON, OR TO BE CONSIDERED AS EITHER BEING APPROVED OR IN ACCORDANCE WITH

hMa
hanrahan Meyers architect,llp

ARCHITECT:
HANRAHAN MEYERS ARCHITECTS, LLP
6 MAIDEN LANE SUITE 510
NEW YORK, NY 10038
T: (212) 989-6026 F: (917) 591-9825

Cosentini

MEP ENGINEERS:
Cosentini Associates
Two Pennsylvania Plaza – Third Floor
NEW YORK, NY 10121
T: (212) 615-3760 F: (212) 615-3600

Thornton Tomasetti

STRUCTURAL ENGINEERS:
Thornton Tomasetti
51 Madison Avenue
NEW YORK, NY 10010
T: (917) 661-7800 F: (917) 661-7801

EKLA PLLC

LANDSCAPE ARCHITECTS:
Elizabeth Kennedy Landscape Architect, PLLC
Brooklyn Navy Yard Building 275 Room 202
63 Flushing Avenue Unit 264
BROOKLYN, NY 11205
T: (718) 569-8637 F: (718) 709-5885

PROJECT:

Kowsky Plaza Repair

401 South End Avenue
New York, NY 10280

PROPERTY INFORMATION:

NOTES:

Rev No.	Description	Date
	BID SET	11.15.15

DOB STAMPS AND SIGNATURE:

SEAL AND SIGNATURE:

DATE:

DRAWN BY: BM

CHECKED BY: SB

SHEET TITLE:
ELECTRICAL ONE LINE DIAGRAM FOR NEW UTILITIES WEST AND EAST STRUCTURES

PAGE OF

SHEET NUMBER:

E-600.00

FILE NAME I:\140143\Electrical\140143 E-600.dwg SAVED ON 11/24/2015 3:17 PM PLOTTED ON 11/24/2015 3:38 PM PLOTTED BY MARTIN, BENJAMIN

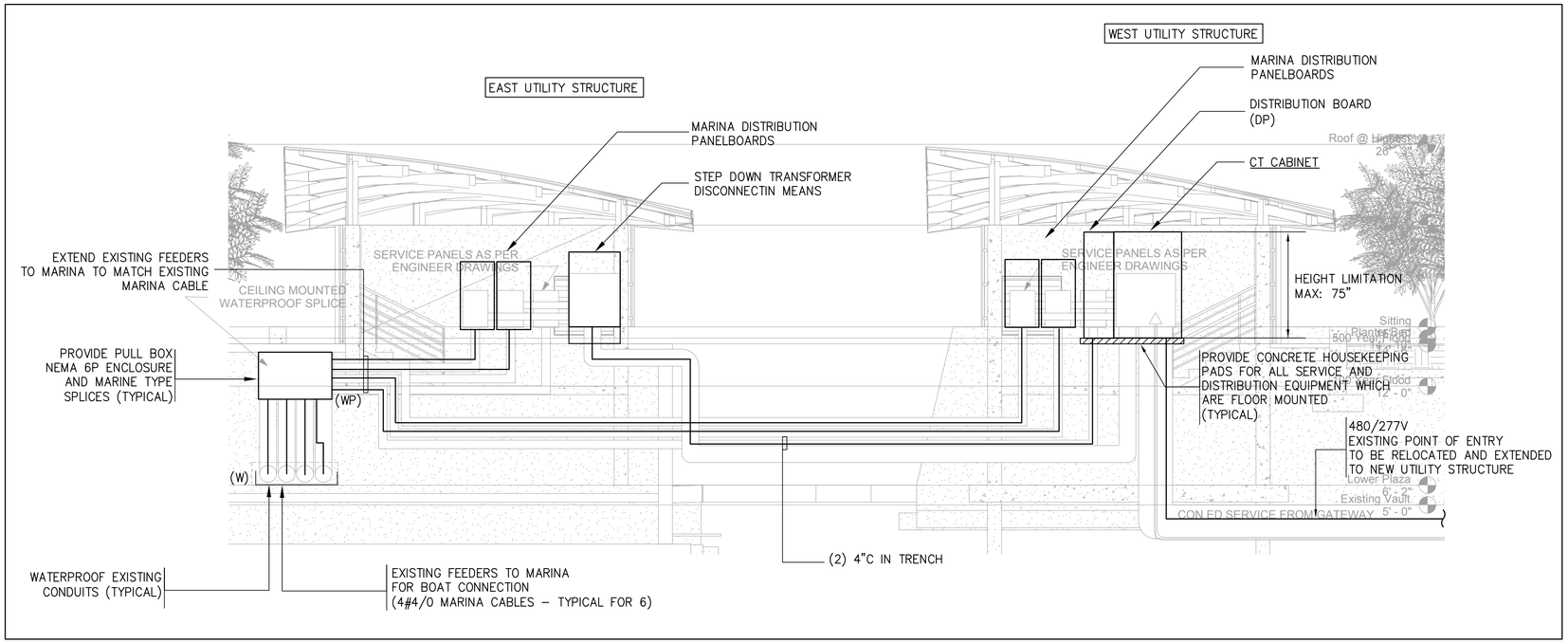

1 NEW UTILITIES WEST AND EAST STRUCTURES - DETAIL

SCALE: N.T.S.

NOTES:

1. FOR ONE LINE RISER DIAGRAM REFER TO DRAWING E–300.00.
2. PROVIDE ADDITIONAL CONDUITS (IN ADDITION TO INDICATED ON CONTRACT DRAWINGS) BETWEEN EAST AND WEST UTILITY STRUCTURES:
   (a) (1) 1"C FOR FIRE ALARM
   (b) (1) 2"C FOR POWER
   (c) (2) 2 1/2"C FOR SPARE (FUTURE)
3. PROVIDE ADDITIONAL CONDUITS IN ADDITION TO INDICATED ON CONTRACT DRAWINGS BETWEEN WEST UTILITY STRUCTURE AND BPC NORTH COVE VAULT:
   (a) (1) 1"C FOR FIRE ALARM
   (b) (1) 3/4"C FOR POWER AND LIGHTING
   (c) (2) 2 1/2"C FOR SPARE (FUTURE)
4. PROVIDE ADDITIONAL CONDUITS IN ADDITION TO INDICATED ON CONTRACT DRAWINGS BETWEEN WEST UTILITY STRUCTURE AND TELECOMMUNICATION VAULT:
   (a) (1) 1"C FOR FIRE ALARM TELEPHONE LINES
   (b) (1) 1"C FOR SPARE (FUTURE)
5. PROVIDE ADDITIONAL CONDUITS IN ADDITION TO INDICATED ON CONTRACT DRAWINGS BETWEEN WEST UTILITY STRUCTURE AND SUMP PUMP VAULT (EAST OF BPC NORTH COVE VAULT):
   (a) (1) 1"C FOR POWER AND LIGHTING (FUTURE)
   (b) (1) 1"C FOR SUMP PUMP POWER
   (c) (1) 2 1/2"C FOR SUMP PUMP FLOAT SWITCHES AND OTHER CONTROLS

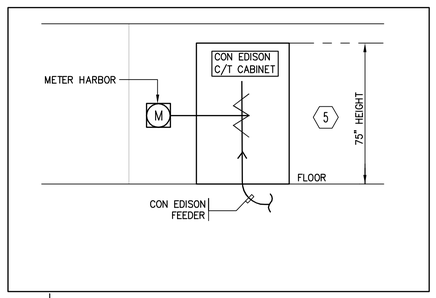

2 NEW C/T CABINET CONNECTION DETAIL

SCALE: N.T.S.

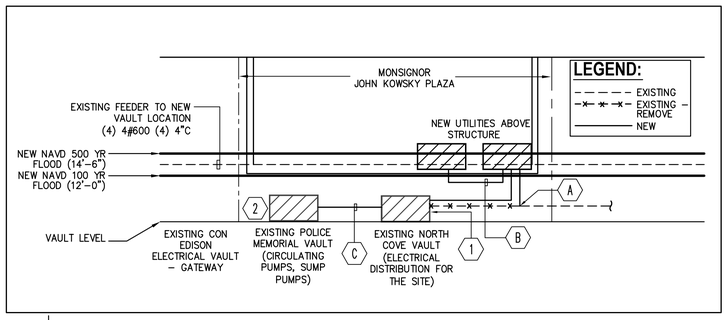

3 BPC NORTH COVE VAULT - EQUIPMENT RELOCATION DETAIL

SCALE: N.T.S.

LEGEND:

- (A) EXTEND EXISTING 480/277V FEEDER TO NEW UTILITY VAULT. COORDINATE WITH CON EDISON.
- (B) 6–600MCM+1#2/0 IN (2) 4"C
- (C) BRANCH CIRCUITS IN EXISTING CONDUIT TO POLICE MEMORIAL VAULT

ALTERATIONS OR ADDITIONS TO THIS ENGINEERING DOCUMENT BY AN UNLICENSED PERSON IS A VIOLATION OF CHAPTER 16, TITLE VIII, ARTICLE 145 § 7209.2 OF THE NEW YORK STATE EDUCATION LAW.

* THIS PLAN APPROVED ONLY FOR WORK INDICATED ON THE APPLICATION SPECIFICATION SHEET. ALL OTHER MATTERS SHOWN ARE NOT TO BE RELIED UPON, OR TO BE CONSIDERED AS EITHER BEING APPROVED OR IN ACCORDANCE WITH

hMa
hanrahan Meyers architect,llp

ARCHITECT:
HANRAHAN MEYERS ARCHITECTS, LLP
6 MAIDEN LANE SUITE 510
NEW YORK, NY 10038
T: (212) 989-6026 F: (917) 591-9825

Cosentini

MEP ENGINEERS:
Cosentini Associates
Two Pennsylvania Plaza – Third Floor
NEW YORK, NY 10121
T: (212) 615-3760 F: (212) 615-3600

Thornton Tomasetti

STRUCTURAL ENGINEERS:
Thornton Tomasetti
51 Madison Avenue
NEW YORK, NY 10010
T: (917) 661-7800 F: (917) 661-7801

EKA PLLC

LANDSCAPE ARCHITECTS:
Elizabeth Kennedy Landscape Architect, PLLC
Brooklyn Navy Yard Building 275 Room 202
63 Flushing Avenue Unit 264
BROOKLYN, NY 11205
T: (718) 569-8837 F: (718) 709-5885

PROJECT:

Kowsky Plaza Repair

401 South End Avenue
New York, NY 10280

PROPERTY INFORMATION:

NOTES:

Rev No.	Description	Date
	BID SET	11.15.15
	BID SET	11.15.15

DOB STAMPS AND SIGNATURE:

SEAL AND SIGNATURE:

DATE:

DRAWN BY: BM

CHECKED BY: SB

SHEET TITLE:

ELECTRICAL NEW WEST AND EAST UTILITY STRUCTURES DETAIL

PAGE OF

SHEET NUMBER:

E-700.00

FILE NAME: I:\140143\Electrical\140143 E-700.dwg SAVED ON 11/24/2015 3:25 PM PLOTTED ON 11/24/2015 3:38 PM PLOTTED BY MARTIN, BENJAMIN

MECHANICAL DRAWING LIST

DWG #	DESCRIPTION
M-001.00	MECHANICAL DRAWING LIST, SYMBOL LEGEND AND SPECIFICATIONS
M-102.00	MECHANICAL GROUND FLOOR PLAN

SYMBOL LEGEND

	NEW DUCTWORK WITH 1" ACOUSTICAL LINING
	NEW DUCTWORK
	EXISTING DUCTWORK TO REMAIN
	EXISTING DUCTWORK TO BE REMOVED
	NEW PIPING
	EXISTING PIPING TO BE REMOVED
	EXISTING PIPING TO REMAIN
	NEW CEILING DIFFUSER
	NEW LINEAR DIFFUSER
	NEW CEILING REGISTER (RETURN)
VD	VOLUME DAMPER
AL	1" ACOUSTICAL LINING
T	NEW THERMOSTAT
F/SM	FIRE/SMOKE DAMPER
C.D.	CONDENSATE DRAIN
SD	SMOKE DETECTOR
	NEW CONTROL LINE FOR THERMOSTAT
	JUMPER DUCT ABOVE HUNG CEILING TO BE A MIN. OF 1 SQ. FT. UNLESS NOTED OTHERWISE
FC	FLEXIBLE CONNECTION
	OPENING IN WALL ABOVE HUNG CEILING TO BE A MINIMUM OF 1 SQ. FT. UNLESS NOTED OTHERWISE
F/SM	FIRE/SMOKE DAMPER
	FAN POWER BOX WITH HEAT COIL
	FAN POWER BOX WITHOUT COIL
C	CONNECT NEW TO EXISTING
CWS	CONDENSER WATER SUPPLY
CWR	CONDENSER WATER RETURN
HWS	HOT WATER SUPPLY
HWR	HOT WATER RETURN
AC	AIR CONDITIONING UNIT
SQ.FT.	SQUARE FOOT
CP	CONDENSATE PUMP
126"	BEAM HEIGHT (TO BE VERIFIED IN FIELD)
OED	OPEN END DUCT
WMS	WIRE MESH SCREEN

MECHANICAL SPECIFICATION

GENERAL

1. GENERAL CONDITIONS
   - A. THE APPLICABLE PROVISIONS OF THE GENERAL CONSTRUCTION SPECIFICATIONS SHALL APPLY.
   - B. THE CONTRACTOR SHALL PROVIDE ALL ITEMS OF LABOR OR MATERIALS NOT SPECIFICALLY INDICATED, BUT REQUIRED TO COMPLETE THE INTENDED INSTALLATIONS.
   - C. THE WORK UNDER THIS CONTRACT SHALL BE PERFORMED SIMULTANEOUSLY WITH WORK OF OTHER TRADES, SO AS NOT TO DELAY THE OVERALL PROGRESS OF WORK.
   - D. THIS CONTRACTOR SHALL BE RESPONSIBLE FOR HIS WORK WITH ITS COMPLETION AND FINAL ACCEPTANCE AND SHALL REPLACE ANY OF SAME WHICH MAY BE DAMAGED, LOST OR STOLEN, WITHOUT ADDITIONAL COSTS TO THE OWNER.
   - E. ALL WORK AND MATERIAL TO BE IN ACCORDANCE WITH BASE BUILDING SPECIFICATIONS AND LEASE REQUIREMENT AND TENANT WORK LETTER UNLESS NOTED OTHERWISE ON PLANS.
   - F. ALL WORK IS TO BE CONDUCTED IN ACCORDANCE WITH THE BUILDING'S RULE AND REGULATIONS. A COPY OF THE REGULATIONS CAN BE OBTAINED AT THE BUILDING OFFICE.
   - G. OWNER SHALL BE RESPONSIBLE FOR SPECIAL INSPECTION AS PART OF THIS CONTRACT. OWNER SHALL PROVIDE THE NAME OF A LICENSED PROFESSIONAL ENGINEER TO ARCHITECT WHEN AWARDED THE CONTRACT.
   - H. ALL EXISTING SUPPLY AND OUTSIDE AIR DUCTWORK WHERE INSULATION IS MISSING OR DAMAGED SHALL BE FULLY INSULATED WITH 1½" THICK THERMAL INSULATION.
   - I. PROVIDE SMOKE DETECTOR AT SUPPLY AND RETURN MAIN DUCT FOR AC UNITS/HEAT PUMPS WITH AIR CAPACITY MORE THAN 2000 CFM.
   - J. ALL OPENINGS RESULTING FROM REMOVAL OF EXISTING DUCTWORK, CEILING DIFFUSERS AND CEILING REGISTERS SHALL BE BLANKED-OFF AND AIR TIGHT, AS PER SMACNA.
2. OPERATING & MAINTENANCE INSTRUCTIONS
   - A. AFTER FINAL TESTS AND ADJUSTMENTS, FULLY INSTRUCT OWNER'S OPERATING PERSONNEL IN ALL DETAILS OF OPERATION FOR EQUIPMENT INSTALLED.
   - B. PROVIDE TO THE OWNER OPERATION AND MAINTENANCE MANUALS.
   - C. GUARANTEE AND SERVICE
     1. THE CONTRACTOR SHALL GUARANTEE THE ENTIRE INSTALLATION FOR A PERIOD OF ONE YEAR FROM THE DATE OF THE FINAL ACCEPTANCE OF THE INSTALLATION BY THE OWNER.
     2. THE CONTRACTOR SHALL DURING THE PERIOD OF GUARANTEE REPLACE OR REPAIR AT HIS OWN EXPENSE ANY PIECE OF EQUIPMENT AND/OR MATERIAL WHICH IS FOUND TO BE DEFECTIVE. THE CONTRACTOR SHALL ALSO REPAIR ALL DAMAGE TO SURROUNDING WORK CAUSED BY THE FAILURE, REPAIR OR REPLACEMENT OF DEFECTIVE EQUIPMENT AT HIS OWN EXPENSE.
3. SHOP DRAWINGS & EQUIPMENT SUBMISSIONS
   - A. SIX (6) COPIES OF DUCTWORK AND PIPING AND CERTIFIED EQUIPMENT MANUFACTURER'S DATA SHALL BE SUBMITTED FOR APPROVAL PRIOR TO FABRICATION, ERECTION OR PURCHASE.
   - B. PRODUCT DATA – SUBMIT MANUFACTURER'S PRINTED LITERATURE, CATALOG CUTS, CERTIFIED EQUIPMENT PERFORMANCE DATA, WIRING DIAGRAMS AND INSTALLATION INSTRUCTIONS.
   - C. SHOP DRAWINGS – SUBMIT PLANS, SECTIONS, DETAILS, SCHEDULES AND CALCULATIONS. LAYOUTS SHALL BE DOUBLE LINE, SCALE: 3/8"=1'-0" COORDINATED WITH OTHER TRADES AND WITH BUILDING CONSTRUCTION ELEMENTS. SUBMIT ONE REPRODUCIBLE AND FIVE (5) PRINTS OF EACH DRAWING.
   - D. MAINTENANCE MANUALS – PREPARE OPERATING AND MAINTENANCE MANUAL INCLUDING THE FOLLOWING:
     - a. MANUFACTURER'S LITERATURE DESCRIBING EACH PIECE OF EQUIPMENT.
     - b. COPIES OF PRODUCT WARRANTIES AND GUARANTIES.
     - c. OPERATING AND MAINTENANCE PROCEDURES, SERVICING INSTRUCTIONS.
   - E. ALL SHOP DRAWINGS MUST BE APPROVED BY THE BUILDING MANAGEMENT OFFICE BEFORE CONSTRUCTION PROCEEDS, INCLUDING THE FOLLOWING :
     - a. CATALOG CUTS AND PERFORMANCE OF PROPOSED MECHANICAL EQUIPMENT (6 SETS).
     - b. CONTRACTOR ⅜" SCALE SHEET METAL SHOP DRAWINGS (6 SETS) SHOP DRAWINGS MUST BE APPROVED BY BUILDING MANAGEMENT OFFICE BEFORE CONSTRUCTION PROCEEDS.
     - c. PRESSURE TEST REPORTS AND WATER PURITY TEST REPORTS (6 SETS).
     - e. AIR AND WATER BALANCE REPORTS (2 SETS). WHEN BALANCING REPORT IS SUBMITTED TO THE BUILDING, INCLUDE ⅛" SCALE HVAC DRAWING NOTING DIFFUSERS NOS. AND COLUMN NOS. REPORT MUST BE SUBMITTED WITHIN 2 WEEKS AFTER BALANCING IS COMPLETED.
     - f. EQUIPMENT USE PERMITS FOR ALL HVAC UNITS.
4. RECORD DRAWINGS
   - A. REPRODUCIBLE RECORD DRAWINGS SHALL BE SUPPLIED UPON WHICH CORRECTIONS SHALL BE MADE TO PROVIDE AN ACCURATE AND COMPLETE RECORD OF THE WORK AS INSTALLED.
   - B. AS-BUILT INFORMATION SHALL BE SUBMITTED AS FOLLOWS :
     1. CAD DRAWING FILES ON DISKS IN AUTOCAD VERSION 2005 FORMAT.
     2. ONE (1) SET OF REPRODUCIBLE DRAWINGS.
     3. TWO (2) SETS OF BLUEPRINTS.
5. TESTING, ADJUSTMENTS AND BALANCING
   - A. IT IS THE INTENT UNDER THIS SECTION OF THE WORK TO OBTAIN COMPLETE BALANCING OF EACH AND EVERY FAN, BRANCH DUCTWORK, DRY COOLER, AIR CONDITIONING UNIT, PUMP, WATER SYSTEM, TERMINAL UNIT, AIR OUTLET, DAMPER ETC.
   - B. MAKE ALL REQUIRED ADJUSTMENTS OF AIR AND WATER SYSTEM DEVICES UNTIL ALL SPECIFIED PERFORMANCES ARE MET.
   - C. ADJUST WATER BALANCING VALVES TO OBTAIN REQUIRED FLOW AND SPECIFIED PRESSURE DROPS ACROSS COILS.
   - D. PIPING SYSTEMS SHALL BE TESTED TO A HYDROSTATIC PRESSURE AT LEAST 1 1/2 TIMES THE MAXIMUM OPERATING PRESSURE (BUT NOT LESS THAN 40 LBS. PER SQ. IN.) FOR A SUFFICIENTLY LONG TIME (4 HOUR MINIMUM) TO DETECT ALL LEAKS AND DEFECTS. WHERE NECESSARY, PIPING SHALL BE TESTED IN SECTIONS TO PERMIT THE PROGRESS OF THE JOB.
   - E. AFTER COMPLETION OF TESTS SUBMIT ITEMIZED LIST TO CONSULTING ENGINEER OF FAN SPEEDS IN RPM, AMPERE READINGS, PRESSURE DROPS OF EACH COIL, INLET AND LEAVING WATER TEMPERATURES. READINGS AND TESTS OF AIR OUTLETS SHALL INCLUDE REQUIRED CFM AND RESULTANT CFM AFTER ADJUSTMENTS. FOR PURPOSES OF TESTING USE PILOT TUBES WITH ONCLINED MANOMETERS TO TRAVERSE DUCT CROSS SECTION. TEST SHALL INCLUDE NEW TENANT WORK AND EXISTING BASE BUILDING AC UNITS.
   - F. SYSTEM BALANCING SHALL BE PERFORMED BY AN ORGANIZATION SPECIALIZING IN THE PROCEDURES TO DO SO, HAVING AT LEAST FIVE (5) YEARS EXPERIENCE.
   - G. BALANCING MUST CONFORM TO LATEST RECOMMENDATIONS OF THE ABC.
   - H. IT SHALL BE THE OBLIGATION OF THIS CONTRACTOR TO INCLUDE IN HIS BALANCING PROCEDURE A COMPLETE TEST OF THE BASE BUILDING A.C. UNIT AND/ON SUPPLY AND RETURN TAPS CONDENSER OR CHILLED WATER SUPPLY PRESSURE, PRIOR TO COMMENT OF WORK IN ORDER TO CONFIRM LEASE IDENTIFIED CAPACITY, IN ORDER TO ESTABLISH BASE BUILDING AIR CONDITION CAPACITIES PRIOR TO CONNECTION OF TENANT SYSTEM. CONTRACT SHALL NOTIFIED BUILDING MANAGER, TENANT ENGINEER AT LEAST 5 DAYS PRIOR TO TEST.

   THIS SHALL INCLUDE:
   1. CFM QUANTITIES FOR MAXIMUM AND MINIMUM SETTINGS. MINIMUM SETTING SHALL PROVIDE SUFFICIENT PRESSURE TO INSURE THAT ANY ZONE REQUIRING FULL (MAXIMUM) CFM WILL BE SATISFIED. (MAXIMUM) CFM WILL BE SATISFIED.
   2. DISCHARGE TEMPERATURE. STATE WHETHER FREE COOLING OR COMPRESSORS ARE OPERATING.
   3. LOW TEMPERATURE RETURN AIR RESET TO BE SET AT LOW TEMPERATURE (68°). THE TEST WILL BE DONE IN THE PRESENCE OF KNOWLEDGE OF THE BUILDING ENGINEER. MALFUNCTIONS WILL BE REPORTED TO THE BUILDING ENGINEER AND COSENTINI ASSOCIATES. ALL DATA RECORDED SHALL BE ENTERED INTO THE BALANCING REPORT.
   - J. AIR READINGS AND FAN READINGS SHALL BE TAKEN PRIOR TO CONSTRUCTION. TRAVERSE ALL MAIN DUCTS TO DETERMINE AVAILABLE QUANTITY OF CFM., AMPERAGE, RPM AND STATIC PRESSURES OF THE FANS SHOULD BE CHECKED TO VERIFY AIR HANDLERS OPERATING CONDITIONS. ALL READINGS ARE TO BE TURNED OVER TO THE BUILDING MANAGEMENT OFFICE FOR REVIEW.
   - K. REBALANCE ALL SYSTEMS WHICH ARE AFFECTED BY TENANT WORK. PRIOR TO PERFORMING AIR BALANCE PROCEDURES, TENANT'S BALANCER MUST CONTACT BUILDING MANAGEMENT OFFICE TO VERIFY OPERATION OF SYSTEM, 24 HOUR WRITTEN NOTICE IS REQUIRED.
   - L. ANY CEILINGS OUTSIDE OF THE TENANT SPACE WHICH ARE BROKEN OR REMOVED DURING TENANT BALANCING PROCEDURES MUST BE REPLACED AT TENANTS EXPENSE.
   - M. WRITTEN NOTIFICATION TO THE BUILDING MANAGEMENT OFFICE MUST BE MADE EACH TIME CFM READIGS ARE TAKEN. SUBMIT COPY OF BALANCE REPORT TO BUILDING MANAGEMENT OFFICE.
6. APPROVALS AND SUBSTITUTIONS
   - A. IT IS THE INTENT OF THESE SPECIFICATIONS THAT WHEREVER A MANUFACTURER IS SPECIFIED AND SUBSTITUTIONS ARE MADE, THEY SHALL CONFIRM IN ALL RESPECTS TO THE SPECIFIED ITEM. CRITERIA AS DELINEATED FOR EQUIPMENT SHALL BE INTERPRETED AS MINIMUM PERFORMANCE REQUIREMENTS.
   - B. SUBSTITUTED EQUIPMENT WHERE PERMITTED MUST CONFORM TO SPACE REQUIREMENTS. ANY SUBSTITUTED EQUIPMENT THAT CANNOT MEET SPACE REQUIREMENTS, WHETHER APPROVED OR NOT, SHALL BE REPLACED AT THE CONTRACTOR'S EXPENSE. ANY MODIFICATION OF RELATED SYSTEMS OR ADDITIONAL COST THAT RESULT FROM SUBSTITUTED EQUIPMENT SHALL BE DONE BY THIS CONTRACTOR.
7. VERIFYING EXISTING CONDITIONS, REMOVALS & ALTERATIONS
   - A. THE CONTRACTOR SHALL VISIT THE PREMISES TO DETERMINE EXISTING CONDITIONS AND COMPARE SAME WITH DRAWINGS AND SPECIFICATIONS AND SATISFY HIMSELF OF ALL CONDITIONS PRIOR TO THE SUBMISSION OF A BID PROPOSAL. NO ALLOWANCE WILL BE MADE FOR FAILURE TO COMPLY WITH THESE REQUIREMENTS AND A BID PROPOSAL SHALL BE CONSTRUED AS EVIDENCE HE HAS DONE SO.
   - B. THE CONTRACTOR SHALL REMOVE, RELOCATE, REPLACE, ADJUST, ADAPT AND MODIFY EXISTING EQUIPMENT AND/OR SYSTEMS AS REQUIRED BY THE DRAWINGS OR SPECIFICATIONS AND AS MAY BE REQUIRED WHEN SUCH WORK IS UNCOVERED AND FOUND TO INTERFERE WITH THE COMPLETION OF WORK IN THIS CONTRACT OR OTHER CONTRACT WORK.
   - C. ALL REMOVED EQUIPMENT AND MATERIAL SHALL BE REMOVED FROM THE PROJECT SITE.
   - D. PROVIDE SHUTDOWNS, DRAINING AND REFILLING, RECONNECTIONS AND STARTUPS OF EXISTING SYSTEMS NECESSARY IN CONNECTION WITH THE NEW WORK. COORDINATE SHUTDOWNS WITH THE OWNER.
   - E. TEMPORARY SERVICES: PROVIDE TEMPORARY SERVICES DURING THE INTERRUPTION IN SERVICE CREATED BY THE DEMOLITION OF THE EXISTING FACILITY AND UNTIL THE NEW FACILITY BECOMES OPERATIONAL. PROCURE RENTAL EQUIPMENT OF ADEQUATE CAPACITIES AND ASSUME ALL COSTS RELATED TO THIS INSTALLATION AND OPERATION OF SAME. ALL COSTS RELATED TO THE INSTALLATION AND PROVIDE CONNECTIONS TO BUILDING UTILITIES INCLUDING ELECTRICAL. BUILDING UTILITIES INCLUDING ELECTRICAL.
8. REMOVALS & ALTERATIONS
   - A. THE CONTRACTOR SHALL REMOVE, RELOCATE, REPLACE, ADJUST, ADAPT AND MODIFY EXISTING EQUIPMENT AND/OR SYSTEMS AS REQUIRED BY THE DRAWINGS OR SPECIFICATIONS AND AS MAY BE REQUIRED WHEN SUCH WORK IS UNCOVERED AND FOUND TO INTERFERE WITH THE COMPLETION OF WORK IN THIS CONTRACT OR OTHER CONTRACT WORK.
   - B. ALL REMOVED EQUIPMENT AND MATERIAL SHALL BE RETURNED TO THE BUILDING MANAGEMENT FOR THEIR DETERMINATION AS TO WHAT WILL HAPPEN TO SAID EQUIPMENT OR MATERIAL.
9. ACCESS DOORS IN FINISHED CONSTRUCTION
   - A. THIS CONTRACTOR SHALL PREPARE A LIST OF ALL ACCESS DOORS REQUIRED FOR OPERATION AND MAINTENANCE OF ALL CONCEALED EQUIPMENT, DAMPERS, CONTROLS, AND OTHER SIMILAR DEVICES WHICH SHALL BE SUPPLIED TO THE GENERAL CONTRACTOR WHO SHALL FURNISH AND INSTALL SAME. ACCESS DOORS SHALL BE OF AMPLE SIZE (18x18 MINIMUM). COORDINATE LOCATION W/ ARCHITECT.
   - B. THIS CONTRACTOR IN ADVANCE OF CEILING INSTALLATIONS SHALL SUITABLY FIELD TAG AND IDENTIFY ALL CONCEALED EQUIPMENT, DAMPERS, ETC. WHICH REQIORE ACCESS DOOR PROVISIONS.
   - C. ACCESS KITS SHALL BE PROVIDED IN ACOUSTICAL TILE CEILING AS REQUIRED BY THIS CONTRACTOR FOR ACCESS TO ALL DAMPERS.
   - D. ACCESS IS REQUIRED BELOW ALL DAMPERS,AC UNITS & HEAT PUMPS.
10. ELECTRICAL WIRING & WIRING DIAGRAMS
    - A. ELECTRICAL WIRING FOR POWER AND MOTOR STARTERS SHALL BE PROVIDED BY THE ELECTRICAL CONTRACTOR UNDER ANOTHER DIVISION OF CONTRACT WORK.
    - B. THE MECHANICAL CONTRACTOR SHALL PREPARE AND SUBMIT FOR APPROVAL TERMINAL POINT TO TERMINAL POINT, COMPLETELY COORDINATED AND INTEGRATED WIRING DIAGRAMS FOR ALL WIRING REQUIRING FIELD INSTALLATIONS BY THE ELECTRICAL CONTRACTOR.
    - C. SPECIFIC WIRING DIAGRAMS OF FACTORY INSTALLED EQUIPMENT WIRING SHALL ALSO BE SUBMITTED FOR APPROVAL AND FURNISHED TO THE ELECTRICAL CONTRACTOR FOR HIS INSTALLATION REQUIREMENTS AND OTHER USES.
    - D. ALL CONTROL SHALL BE ELECTRIC, ALL ELECTRICAL WORK TO BE IN ACCORDANCE WITH NEW YORK CITY ELECTRICAL CODE. PROVIDE REQUIRED TRANSFORMER SWITCYCS, SENSORS, RELAYS AND ALL WIRING REQUIRED TO ACCOMPLISH FULL CONTROL
    - E. ALL WIRING, STAIERS, SWITCHES,ETC. SHALL BE IN FULL ACCORDANCE WITH ALL LOCAL AND INSURANCE UNDERWRITERS' CODE REQUIREMENT.
    - F. FURNISH DETAILED COMPOSITE WIRING DIAGRAMS FOR THOSE INSTALLING THE ELECTRICAL WORK AND FURNISH SUCH OTHER INFORMATION NECESSARY TO ASSURE THE PROPER CONNECTION, OPERATION AND CONTROL OF MOTORIZED EQUIPMENT, INCLUDING INTERLOCKS, AUTOMATIC OR SAFETY CONTROLS AND AUXILIARY CIRCUITS.
11. CODES, PERMITS AND INSPECTIONS
    - A. ALL WORK SHALL MEET OR EXCEED LATEST REQUIREMENT OF NATIONAL, STATE, COUNTY, MUNICIPAL AND OTHER AUTHORITIES EXERCISING JURISDICTION OF THE WORK OF THIS PROJECT.
    - B. ANY PORTION OF WORK WHICH IS NOT SUBJECT TO THE APPROVAL OF AN AUTHORITY HAVING JURISDICTION SHALL BE PROVIDED IN ACCORDANCE WITH NATIONAL FIRE PROTECTION ASSOCIATION REQUIREMENTS.
    - C. SECURE PERMITS AND INSPECTION CERTIFICATES AND TRANSMIT SAME TO THE OWNER AT THE COMPLETION OF THE WORK.

D. NYC BUILDING DEPARTMENT NOTES

1.1.1. GENERAL NOTES

1.1.1.1. ALL WORK AND COMPONENTS SHOWN ON THESE PLANS COMPLY WITH THE NEW YORK BUILDING LAWS AS OF JULY 1, 2014 AS AMENDED TO THIS DATE.

1.1.1.2. NEW YORK STATE ENERGY CONSERVATION CODE 2014 HAVE BEEN FOLLOWED.

1.1.1.3. THE MECHANICAL SYSTEMS HAVE BEEN DESIGNED IN ACCORDANCE WITH THE NEW YORK CITY MECHANICAL CODE 2014.

1.1.1.4. THE HEATING AND AIR CONDITIONING SYSTEMS HAVE BEEN DESIGNED TO MAINTAIN A MINIMUM TEMPERATURE OF 76 DEG F (SUMMER) . AND A MAXIMUM TEMPERATURE OF 72 DEG F (WINTER) .

1.1.1.5. TEMPERATURES VARYING FROM THESE POINTS WILL BE ACCOMPLISHED WITHOUT THE USE OF ADDITIONAL FUEL.

1.1.1.6. OUTSIDE AIR DURING HEATING AND/OR COOLING PERIODS FOR WHICH FUEL FOR MAINTAINING TEMPERATURES IS REQUIRED IS LIMITED TO 0.15 CFM/SQFT. PER NY MC TABLE 403.3, OR PER EXISTING BUILDING CODE COMPLIANT DESIGN.

1.1.1.7. INSPECTIONS AND TESTING AS PER SECTION MC 107 OF NYC BUILDING CODE 2008 SHALL BE PERFORMED BY SPECIAL INSPECTORS AS RETAINED BY THE OWNER.

1.1.1.8. SPECIAL INSPECTIONS ARE REQUIRED FOR :

AIR CONDITIONING SYSTEMS, VENTILATION SYSTEMS, FUEL BURNING,
FUEL STORAGE EQUIPMENT, REFRIGERATION SYSTEMS, HEATING SYSTEMS, BOILERS - MC 107 SMOKE CONTROL SYSTEMS BC 1704.14
MECHANICAL SYSTEMS BC 1704.15 HEATING SYSTEMS BC 1704.23
FIRESTOP SYSTEMS - PENETRATIONS THROUGH RATED CONSTRUCTION BC 1704.25

SPECIAL INSPECTIONS SHALL BE RESPONSIBLY FOR FILING ALL DOCUMENTS WITH ALL CITY AGENCIES. SPECIAL INSPECTIONS SHALL BE DONE BY SPECIAL INSPECTORS HIRED BY THE OWNER.

E. SPECIAL INSPECTORS SHALL BE RESPONSIBLE FOR FILING ALL DOCUMENTS WITH ALL CITY AGENCIES. SPECIAL INSPECTION SHALL BE DONE BY SPECIAL INSPECTORS HIRED BY OWNER.

F. MECHANICAL APPLIANCES, EQUIPMENT AND SYSTEMS SHALL BE CONSTRUCTED, INSTALLED AND MAINTAINED IN ACCORDANCE WITH THE NEW YORK CITY MECHANICAL CODE

12. COORDINATION
   - A. ALL NEW DUCTWORK SHALL BE KEPT AS HIGH AS POSSIBLE TO MAINTAIN CEILING HEIGHTS SHOWN ON ARCHITECTURAL DRAWINGS.
   - B. MECHANICAL CONTRACTOR SHALL COORDINATE HIS WORK WITH ALL OTHER TRADE.
   - C. WHERE PIPING, LIGHTS AND DUCTWORK CONFLICT, DUCTWORK SHALL BE COORDINATED TO SITE CONDITIONS.
   - D. CONNECT NEW WORK TO EXISTING AS SHOWN ON THE DRAWING.
   - E. CONTRACTOR SHALL COORDINATE EXACT LOCATION OF ALL AIR OUTLETS THERMOSTATS AND SWITCHES WITH ARCHITECT'S REFLECTED CEILING PLANS.
   - F. COORDINATE LOCATION OF MECHANICAL EQUIPMENT, PIPING AND DUCTWORK WITH THE WORK OF OTHER TRADES, PROVIDING CLEARANCES FOR INSULATION, SERVICING, REMOVAL OF COMPONENTS AND EQUIPMENT DISASSANBLY.
   - G. COORDINATE PROVISION OF OPENINGS IN WALLS AND SLABS, POURING OF CONCRETE PADS, SETTING OF SLEEVES AND CURBS.
   - H. VERIFY ALL DIMENSIONS BY FIELD MEASUREMENT.
   - I. SEQUENCE PHASES OF MECHANICAL WORK WITH THE WORK OF OTHER TRADES.

13. MOTOR STARTERS & CONTROL DEVICES
   - A. FURNISH TO THE ELECTRICAL CONTRACTOR WHO SHALL ERECT AND WIRE SUITABLE STARTING AND CONTROL EQUIPMENT FOR ALL MOTORS.
   - B. MOTOR STARTERS SHALL BE CUTLER HAMMER, WESTINGHOUSE OR ALLEN-BRADLEY MANUFACTURE, SUITABLE FOR WALL OR ANGLE IRON FRAME MOUNTING.
   - C. GENERAL NOTES:
     1. ALL STARTERS FOR MOTOR 1/2HP AND ABOVE SHALL BE MAGNETIC ACROSS-THE-LINE TYPE WITH SWITCH. SUCH STARTERS SHALL BE 208 OR 460 VOLT, 3 PHASE, 60 CYCLE, A.C. SERVICE.
     2. ALL MAGNETIC STARTERS SUBJECT TO MANUAL START AND IN DIRECT VIEW OF THE MOTORS THEY CONTROL SHALL HAVE MOMENTARY CONTACT START AND STOP BUTTONS AND PILOT LIGHT BUILT INTO COVER. ALL SELECTOR SWITCHES IN STARTERS SHALL BE OF THE MAINTAIN CONTACT TYPE.
     3. WHERE STARTERS ARE NOT IN SIGHT OF MOTORS THEY CONTROL, A LOCAL DISCONNECT SWITCH WILL BE PROVIDED BY THE ELECTRICAL CONTRACTOR.
     4. ALL MAGNETIC STARTERS SHALL HAVE THERMAL OVERLOAD IN EACH PHASE LEG AND LOW VOLTAGE PROTECTION.
     5. ALL COILS, CORES, RESISTANCE, INSULATION CONTACTS, TRIPPERS, ETC. OF STARTERS AND RELAYS SHALL BE OF THE APPROVED TYPE. ALL PARTS SUBJECT TO WEAR, ARCING, ETC., SHALL BE RENEWABLE
     6. ALL WIRING, STARTERS, SWITCHES, ETC., SHALL BE IN FULL ACCORDANCE WITH ALL LOCAL AND INSURANCE UNDERWRITERS' CODE REQUIREMENTS.
     7. FURNISH DETAILED COMPOSITE WIRING DIAGRAMS FOR THOSE INSTALLING THE ELECTRICAL WORK, AND FURNISH SUCH OTHER INFORMATION NECESSARY TO ASSURE THE PROPER CONNECTION, OPERATION AND CONTROL OF MOTORIZED EQUIPMENT, INCLUDING INTERLOCKS, AUTOMATIC OR SAFETY CONTROLS AND AUXILIARY CIRCUITS.
     8. PROVIDE LAMACOID NAMEPLATE ATTACHED TO EACH STARTER IDENTIFYING THE SYSTEM IT SERVES.

DUCTWORK.

1. SHEET METAL DUCTWORK
   - A. ALL DUCTWORK, DAMPERS AND ALL AUXILIARY DEVICES AND WORK NECESSARY TO MAKE THE VARIOUS AIR CONDITIONING AND VENTILATING SYSTEMS COMPLETE AND READY FOR SATISFACTORY OPERATION SHALL BE FURNISHED AND INSTALLED.
   - B. ALL LOW AND MEDIUM PRESSURE DUCTS SHALL BE GALVANIZED STEEL, WITH SEAMS, BRACING AND CONSTRUCTION IN ACCORDANCE WITH THE LATEST SMACNA DUCT MANUAL STANDARDS. ALL SUPPLY DUCTS ON SYSTEMS WITH VAV TERMINAL BOXES FROM FAN (SHAFT) DISCHARGE TO BOX SHALL CONFORM TO SMACNA +6" W.G. PRESSURE CLASSIFICATION, (A) SEAL CLASSIFICATION AND SHALL BE TESTED FOR LEAKAGE.
   - C. IN ACCORDANCE WITH SMACNA STANDARDS PROVIDE DUCTWORK CASING ACCESS DOORS TO ALL CONCEALED CONTROLS, FUSIBLE LINKS OF DAMPERS, ETC.
   - D. PROVIDE MANUAL QUADRANT DAMPERS IN EACH SPLIT OR TAP CONNECTION SUPPLY AIR BOOT CONNECTION AND BRANCH DUCT TO AIR OUTLETS FOR BALANCING PURPOSES. EACH PROVIDED WITH EXTENTED OPERATOR AND LOCKING DEVICE. PROVIDE CABLE OPERATED DAMPERS IN INACCESSIBLE CEILINGS ONLY, DO NOT INSTALL DAMPER ON MEDIUM PRESSURE DUCT WORK.
   - E. PROVIDE FUSIBLE LINK FIRE DAMPERS/ COMBINATION FIRE SMOKE DAMPERS AT LOCATION SHOWN ON DRAWINGS AND WHERE NECESSARY TO COMPLY WITH LOCAL OR OTHER AGENCIES OR JURISDICTIONS REQUIRING THEIR INSTALLATIONS AND IN COMPLIANCE WITH THEIR CONSTRUCTION REQUIREMENTS.
   - F. AUTOMATIC DAMPERS SHALL BE AS MANUFACTURED BY ARROW LOUVER AND DAMPER CO. DAMPERS SHALL BE CERTIFIED THAT LEAKAGE SHALL NOT EXCEED 1% WITH THE DAMPER CLOSED AND HOLDING 5" W.G. PRESSURE ACROSS THE FACE.
   - G. DUCTWORK LAYOUTS AND ROUTES AS SHOWN ON THE DRAWINGS ARE SCHEMATIC THEREFORE CHANGES IN DUCT SIZES AND/OR LOCATIONS SHALL BE MADE WHERE NECESSARY TO CONFORM TO SPACE CONDITIONS OR OSTAIN MAXIMUM HEADROOM CONDITIONS; WITHOUT ADDITIONAL COSTS TO THE OWNER.
   - H. WHERE DUCTS ARE SHOWN OR SPECIFIED TO BE ACOUSTICALLY LINED THE SIZES SHOWN ON THE PLANS SHALL BE THE CLEAR INSIDE DIMENSIONS.
   - I. ALL DIFFUSERS, GRILLES AND REGISTERS SHALL BE LOCATED IN CONFORMANCE TO ARCHITECTURAL REFLECTED CEILING PLANS.
   - J. FLEXIBLE DUCTS SHALL NOT BE ACCEPTED.
   2. INSULATION/LINING REQUIREMENTS
   - A. INSULATION SHALL BE APPLIED TO DUCTWORK AND PIPING OF MATERIALS AS SPECIFIED BELOW.
   - B. NOTE THAT DUCTWORK THAT IS INTERNALLY AND ACOUSTICALLY INSULATED/LINED NEED NOT BE INSULATED ON THE EXTERIOR.
   - C. INSULATION/LINING SHALL HAVE COMPOSITE INSULATION OR FACING AND ADHESIVE USED TO ADHERE THE FACING TO THE INSULATION) FIRE AND SMOKE HAZARD RATINGS AS TESTED BY PROCEDURE ASTM E.84, NFPA 255 OR UL 723 NOT EXCEEDING:
     FLAME SPREAD 25
     SMOKE DEVELOPED 50
     ACCESSORIES SUCH AS ADHESIVES, MASTICS, CEMENTS AND TAPES FOR FITTINGS SHALL HAVE THE SAME COMPONENT RATING AS LISTED ABOVE. ALL PRODUCTS OR THEIR SHIPPING CARTONS SHALL BEAR A LABEL INDICATING THAT FLAME AND SMOKE RATINGS DO NOT EXCEED REQUIREMENTS. TREATMENT OF FACINGS TO IMPART FLAME AND SMOKE-SAFETY SHALL BE PERMANENT. THE USE OF WATERSOLUBLE TREATMENTS IS PROHIBITED.
   - D. DUCTWORK INSULATION/LINING MATERIAL
   1. DUCT LINING SHALL BE 1-1/2 POUND PER CUBIC FOOT DENSITY, OWENS CORNING AEROFLEX. MANVILLECON CINACOUSTIC, CERTAINTEED ULTRALITE 150 OR AS PER BASE BUILDING SPECIFICATION. SUBSTITUTIONS ARE NOT ACCEPTABLE. THE THICKNESS INSTALLED SHALL BE 1-1/2".
   2. ALL PORTIONS OF DUCT DESIGNATED TO RECEIVE DUCT LINER SHALL BE COMPLETELY LINED WITH DUCT LINER AND SHALL ALSO BE PROVIDED WITH A VAPOR BARRIER TO PREVENT CONDENSATION.
   3. ALL SUPPLY DUCTWORK SHALL BE COVERED WITH 1" THICK FIBREGLASS DUCT INSULATION.
      - A. DUCT INSULATION SHALL BE 1 LB. PER CU. FT. DENSITY GLASS FIBER WITH A MAXIMUM K FACTOR OF 0.29 AT 75°F MEAN TEMPERATURE, WITH REINFORCED FOIL-FACED, FLAME RESISTANT KRAFT VAPOR BARRIER.
      - B. INSULATION SHALL BE SECURED WITH DUCT ADHESIVE. ALL JOINTS SHALL BE SEALED BY ADHERING A 2" SEALING LAP AT JOINTS WITH VAPOR BARRIER ADHESIVE OR 3" STRIPS OF VAPOR BARRIER JACKET APPLIED WITH VAPOR BARRIER ADHESIVE. INSULATION SHALL THEN BE FASTENED WITH 16 GAUGE COPPER-CLAD WIRE OR FIBER GLASS CORD ON 12" CENTERS ON DUCTS OVER 24" WIDE. WELDED PINS AND CLIPS SHALL BE USED ON THE UNDERSIDE.
   - C. EXTENT OF DUCTWORK INSULATION FOR NEW DUCTWORK
     1. ALL SUPPLY DUCTWORK.
   - D. EXTENT OF DUCTWORK LINING
     1. 10'-0" UPSTREAM AND DOWNSTREAM OF ALL FANS.
     2. 10'-0" DOWNSTREAM OF ALL VAV TERMINAL BOXES.
     3. 10'-0" DOWNSTREAM AND ENTIRE LENGTH OF UPSTREAM DUCTWORK OF ALL AC UNITS.
4. DUCTS AND SHEET METAL PLENUMS BEHIND LOUVERS CONTAINING ALL OR PERCENTAGE OF OUTSIDE AIR SHALL BE INSULATED.
   - A. RIDGID DUCT INSULATION SHALL BE 4.2 LB. PER CU. FT. DENSITY GLASS FIBER WITH A MAXIMUM K FACTOR OF 0.24 AT 75°F MEAN TEMPERATURE, WITH VAPOR BARRIER FACING.
   - B. INSULATION SHALL BE IMPALED OVER WELDED PINS APPLIED TO DUCT SURFACE ON 12" TO 18" CENTERS. USE A MINIMUM OF TWO ROWS OF FASTENERS ON EACH SIDE OF THE DUCT. SECURE INSULATION WITH SUITABLE SPEED WASHERS OR CLIPS FIRMLY IMBEDDED INTO INSULATION.
   - D. ALL JOINTS AND VOIDS IN THE INSULATION SHALL BE FILLED WITH MINERAL WOOL CEMENT. ALL JOINTS, SPEED W

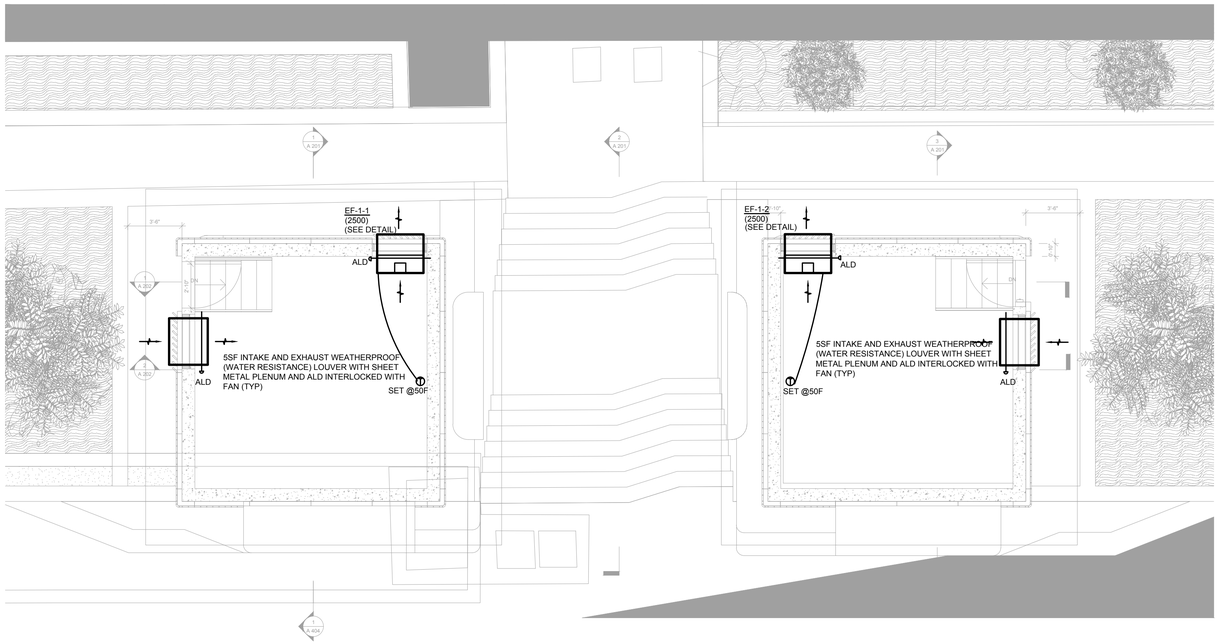

1 PROPOSED LOCATIONS OF NEW POLICE MEMORIAL PLAZA VAULTS

SCALE: 1/16" = 1'-0"

FAN SCHEDULE

FAN NO.	LOCATION	SERVICE	TYPE	CFM	STATIC PRESS. IN.W.G.	RPM	OUTLET SONES	BHP	MOTOR HP	Volt/Ph/Hz	VIBRATION ISOLATION		MANUFACTURER	MODEL NO.	REMARKS
											SPEC. TYPE	DEFLECTION (INCHES)			
EF-1-1, -2	GROUND	VAULT	WALL PROPELLER	2500	0.25	1160	14.2	0.29	1/3	120/1/60	-	-	GREENHECK	SE2-18-435-B3	SIZE:24X24X14 LOUVER MOUNTING(SEE DETAIL

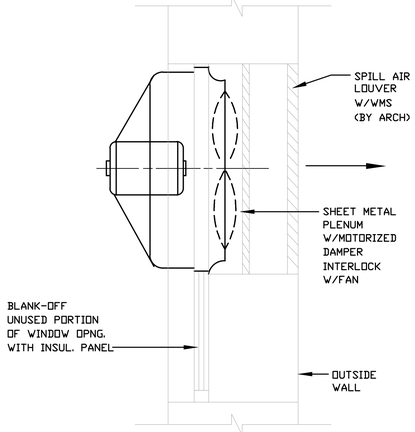

WALL MOUNTED PROPELLER FAN

ALTERATIONS OR ADDITIONS TO THIS ENGINEERING DOCUMENT BY AN UNLICENSED PERSON IS A VIOLATION OF CHAPTER 16, TITLE VIII, ARTICLE 145 § 7209.2 OF THE NEW YORK STATE EDUCATION LAW.

*THIS PLAN APPROVED ONLY FOR WORK INDICATED ON THE APPLICATION SPECIFICATION SHEET. ALL OTHER MATTERS SHOWN ARE NOT TO BE RELIED UPON, OR TO BE CONSIDERED AS EITHER BEING APPROVED OR IN ACCORDANCE WITH

hMa
hanrahan Meyers architect,llp

ARCHITECT:
HANRAHAN MEYERS ARCHITECTS, LLP
6 MAIDEN LANE SUITE 510
NEW YORK, NY 10038
T: (212) 989-9026 F: (917) 591-9825

Cosentini

MEP ENGINEERS:
Cosentini Associates
Two Pennsylvania Plaza - Third Floor
NEW YORK, NY 10121
T: (212) 615-3760 F: (212) 615-3600

Thornton Tomasetti

STRUCTURAL ENGINEERS:
Thornton Tomasetti
51 Madison Avenue
NEW YORK, NY 10010
T: (917) 661-7800 F: (917) 661-7801

EK|A PLLC

LANDSCAPE ARCHITECTS:
Elizabeth Kennedy Landscape Architect, PLLC
Brooklyn Navy Yard Building 275 Room 202
63 Flushing Avenue Unit 264
BROOKLYN, NY 11205
T: (718) 569-8837 F: (718) 709-5885

PROJECT:

Kowsky Plaza Vaults

Battery Park City - North Cove

PROPERTY INFORMATION:

NOTES:

Rev No.	Description	Date
	BID DOCUMENTS	11.15.2015

DOB STAMPS AND SIGNATURE:

SEAL AND SIGNATURE:

DATE: 11.15.15

DRAWN BY: --

CHECKED BY: --

SHEET TITLE:

MECHANICAL FLOOR PLAN

SHEET NUMBER:

M-102.00

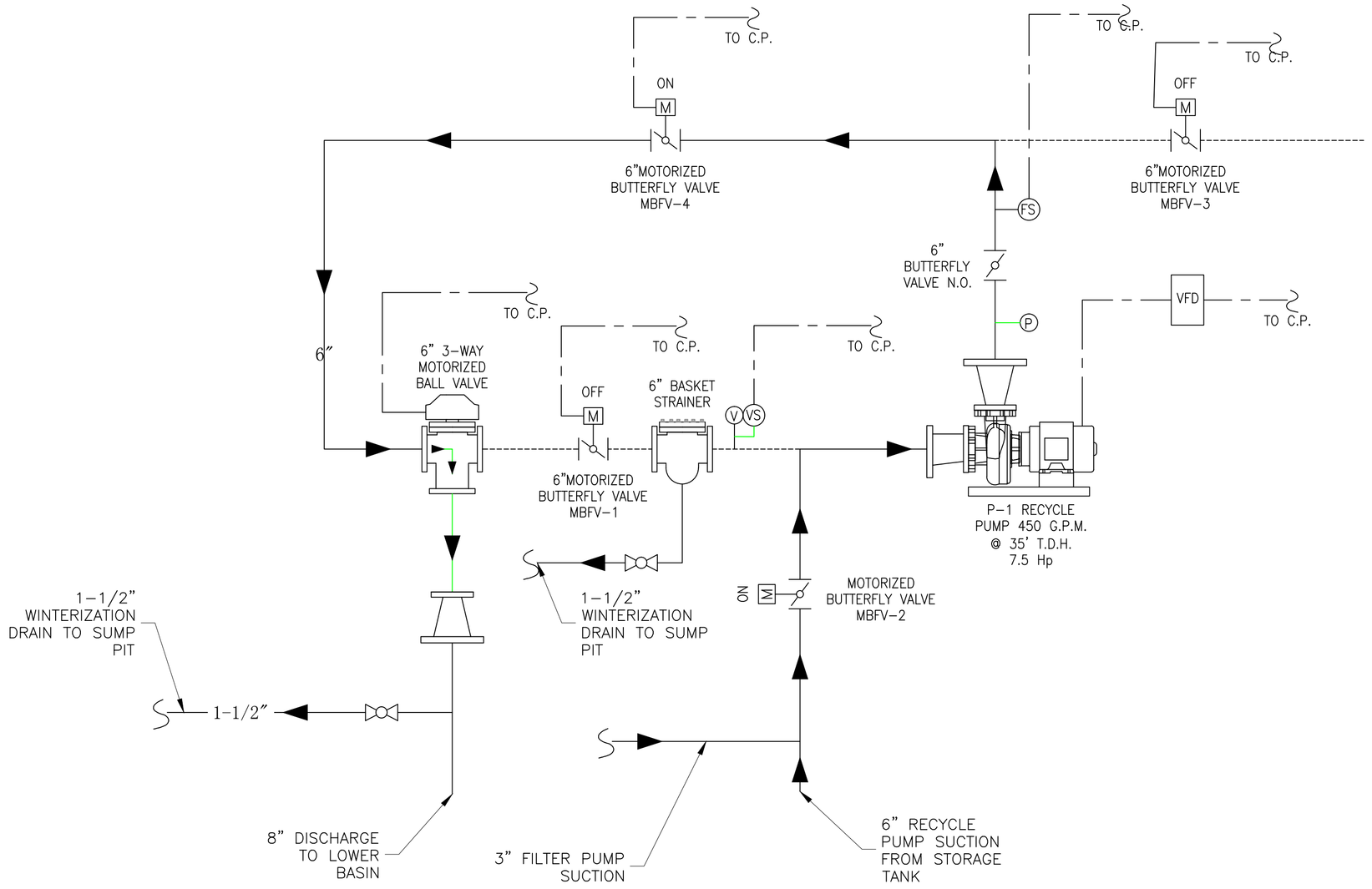

BASIN FILL WHILE FLUME PUMP IS RUNNING

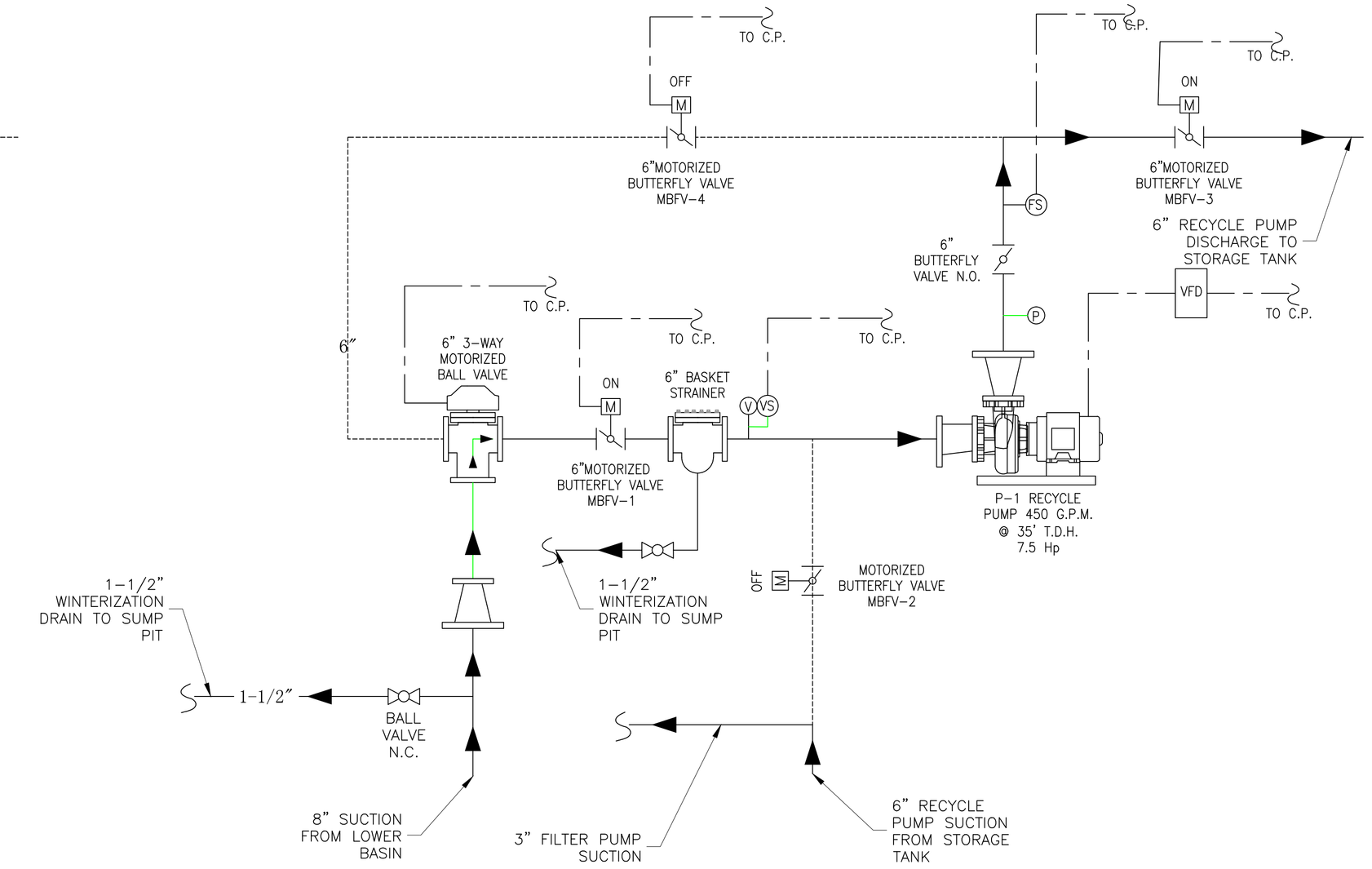

BASIN DRAIN WHILE FLUME PUMP IS OFF

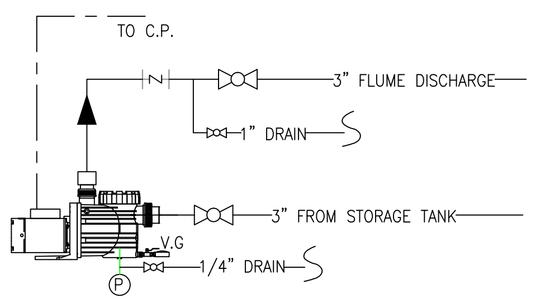

P-2 FLUME PUMP
2 Hp, 208V, 3Ø
110 G.P.M. @ 60'
T.D.H.

FLUME PUMP

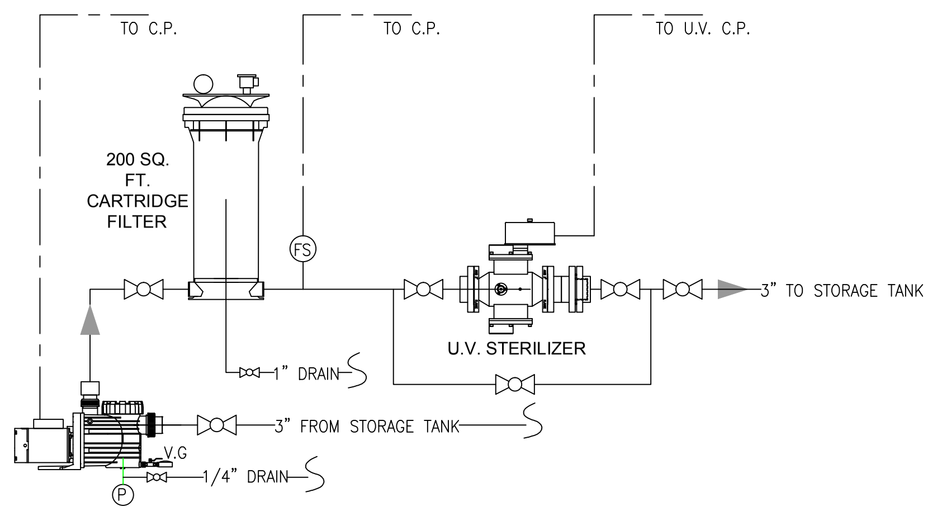

P-3 FILTER PUMP
1 Hp, 120V, 1Ø
78 G.P.M.. @ 60'
T.D.H.

FILTER SYSTEM

SYMBOL KEY	
SYMBOL DESCRIPTION	SYMBOL
BALL VALVE	
BUTTERFLY VALVE	
ELECTRIC ACTUATOR BUTTERFLY VALVE	
CHECK VALVE	
REDUCER	
3 WAY BALL VALVE	
FLOW METER	
CHEMICAL FEED PUMP	
FEATURE/FILTER PUMP	
SKIMMER	
GAUGE PANEL	
U.V. SANITIZER	
SIGHTGLASS	
SAND FILTER	
PRESSURE GAUGE	PG
FLOW SENSOR	
SOLENOID VALVE	S
WATER FLOW ARROW	

PUMP SCHEDULE

TAG	FEATURE	MODEL NO.	MANUFACTURER	HP	VOLTAGE	ø	RPM	GPM	'T.D.H.	F.L.A.
P-1	RECYCLE PUMP	4AC	BELL & GOSSETT	7.5	208 V.	3	1750	450	35'	18.4
P-2	FLUME PUMP	WFK-8	PENTAIR	2	208 V.	3	3450	110	60'	7.1
P-3	FILTER PUMP	WFE-4	PENTAIR	1	120 V.	1	3450	78	60'	14.8

PRELIMINARY DESIGN
NOT FOR CONSTRUCTION

NOTE:
PRESSURE TESTING MUST BE PREFORMED BEFORE WORK COMMENCES ON THE DEMOLITION OF THE MECHANICAL ROOM, TO ENSURE THE INTEGRITY OF THE MECHANICAL PIPING. CONTRACTOR TO IMMEDIATELY DISCLOSE ANY ISSUES TO THE DESIGN TEAM.

NOTE:
PIPE AND CONDUIT ROUTING IS DIAGRAMMATIC AND IN SOME INSTANCES EXAGGERATED FOR CLARITY. REFER TO FOUNTAIN GENERAL NOTES, SHEET F4.21 FOR FURTHER INSTRUCTIONS AND INFORMATION.

NOTE:
REFER TO FOUNTAIN STRUCTURAL DETAILS AND ARCHITECTURAL/HARDSCAPE PLANS FOR CONSTRUCTION INFORMATION, INCLUDING SLOPES, ELEVATIONS, FINISHES, FINAL EQUIPMENT LOCATIONS ETC. THAT ARE NOT SHOWN ON THESE PLANS.

DELTA FOUNTAINS
ARCHITECTURAL & FLOATING FOUNTAINS
11494 COLUMBIA PARK DR. WEST SUITE #4
JACKSONVILLE, FL 32258
V. (904) 886-9030
F. (904) 886-9089
consulting design manufacturing

THIS DRAWING IS THE PROPERTY OF DELTA FOUNTAINS & MAY NOT BE USED WITHOUT WRITTEN PERMISSION FROM DELTA FOUNTAINS

NEW YORK CITY POLICE MEMORIAL
NEW YORK, NY

SHEET TITLE:
PROCESS SCHEMATIC

DATE: 2015.08.26
DRAWN BY: JWT
CHECKED: DELTA

REVISIONS

PROJECT NUMBER: H2615
SHEET NUMBER: F1.00

C:\Users\JAMES\appdata\local\temp\AcPublish_11120\NYCPM-2015.08.25-SDK2D.dwg Plotted: Aug 28, 2015 - 2:02pm by JAMES

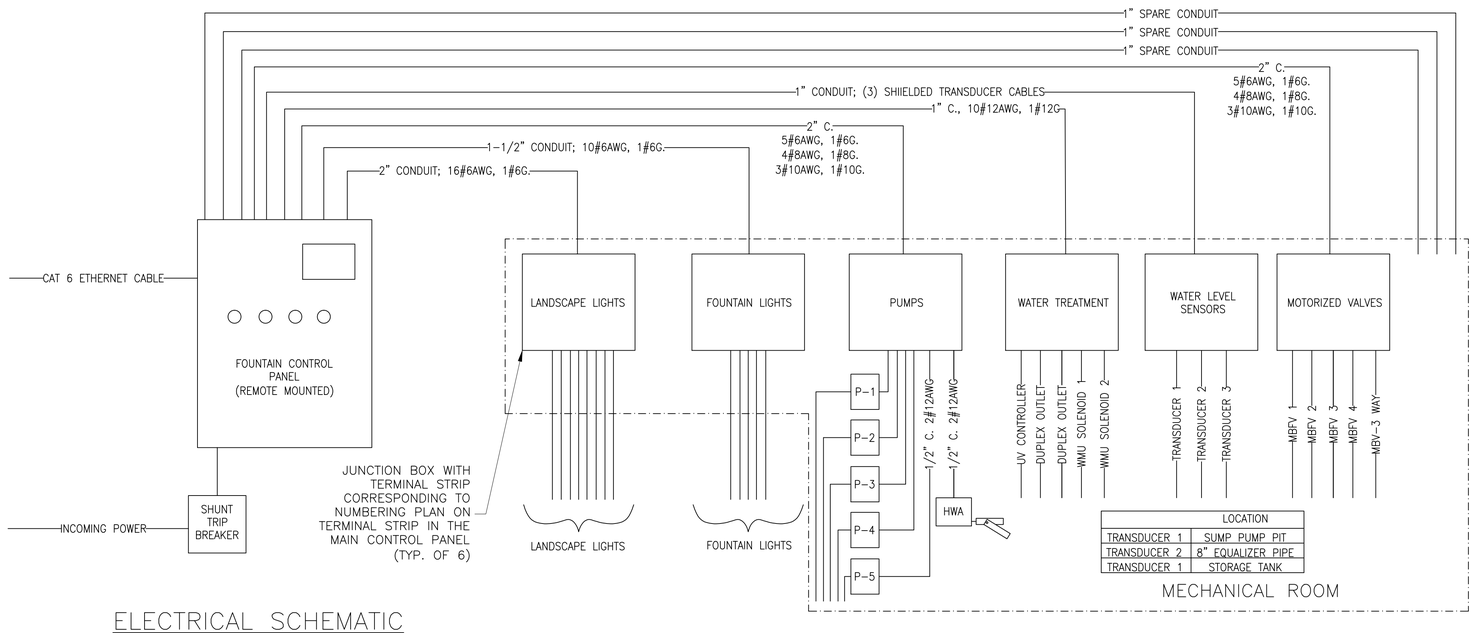

ELECTRICAL SCHEMATIC

PUMP SCHEDULE										
TAG	FEATURE	MODEL NO.	MANUFACTURER	HP	VOLTAGE	ø	RPM	GPM	'T.D.H.	F.L.A.
P-1	RECYCLE PUMP	4AC	BELL & GOSSETT	7.5	208 V.	3	1750	450	35'	18.4
P-2	FLUME PUMP	WFK-8	PENTAIR	2	208 V.	3	3450	110	60'	7.1
P-3	FILTER PUMP	WFE-4	PENTAIR	1	120 V.	1	3450	78	60'	14.8
P-4	SUMP PIT	SP-50	BARNES	1/2	120 V.	1	3450	30	20'	10
P-5	SUMP PIT	SP-50	BARNES	1/2	120 V.	1	3450	30	20'	10

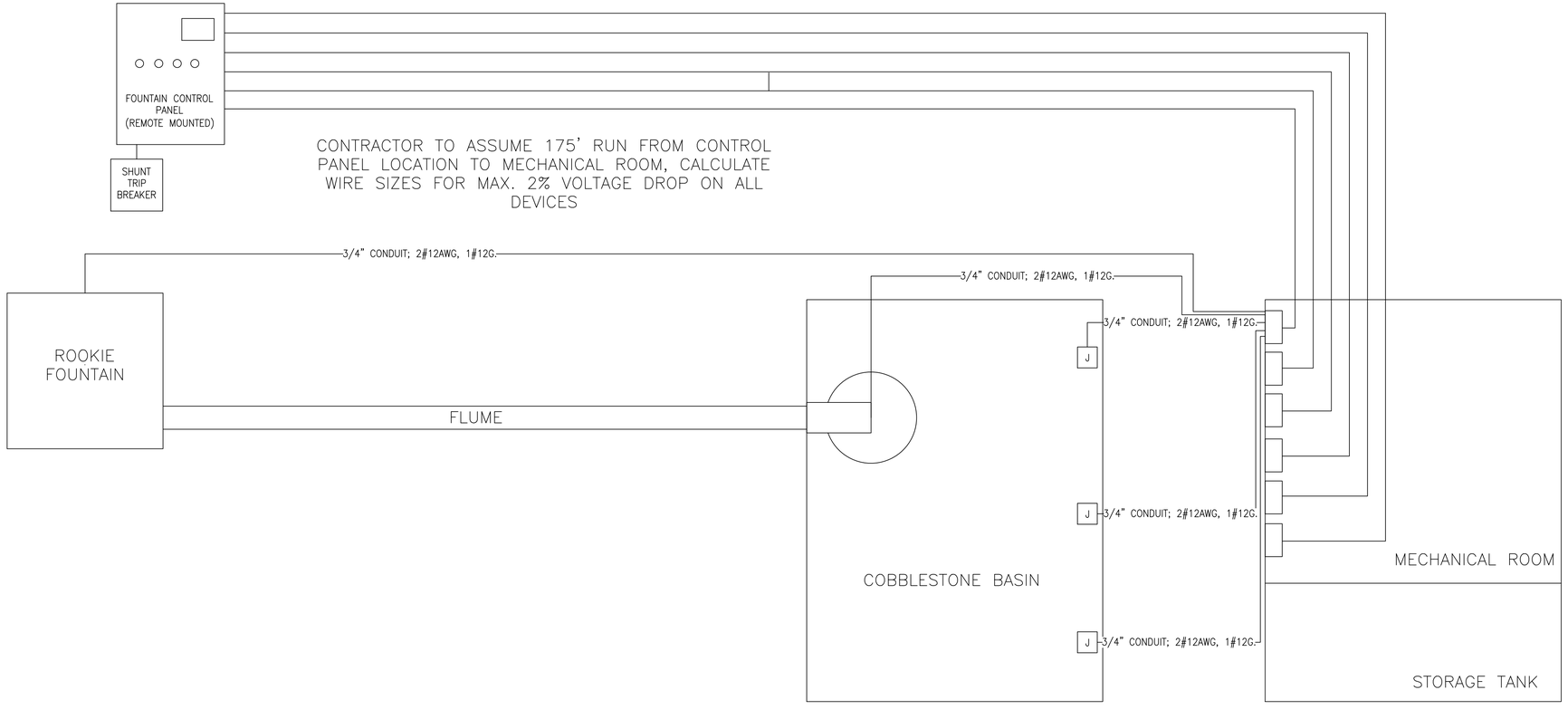

PRELIMINARY DESIGN
NOT FOR CONSTRUCTION

NOTE:

PIPE AND CONDUIT ROUTING IS DIAGRAMMATIC AND IN SOME INSTANCES EXAGGERATED FOR CLARITY. REFER TO FOUNTAIN GENERAL NOTES, SHEET F4.21 FOR FURTHER INSTRUCTIONS AND INFORMATION.

NOTE:

REFER TO FOUNTAIN STRUCTURAL DETAILS AND ARCHITECTURAL/HARDSCAPE PLANS FOR CONSTRUCTION INFORMATION, INCLUDING SLOPES, ELEVATIONS, FINISHES, FINAL EQUIPMENT LOCATIONS ETC. THAT ARE NOT SHOWN ON THESE PLANS.

DELTA FOUNTAINS
ARCHITECTURAL & FLOATING FOUNTAINS
11494 COLUMBIA PARK DR. WEST SUITE #4
JACKSONVILLE, FL 32258
V. (904) 886-9030
F. (904) 886-9089
consulting design manufacturing

THIS DRAWING IS THE PROPERTY OF DELTA FOUNTAINS & MAY NOT BE USED WITHOUT WRITTEN PERMISSION FROM DELTA FOUNTAINS

NEW YORK CITY
POLICE MEMORIAL
NEW YORK, NY

SHEET TITLE:
SCHEMATIC

DATE: 2015.08.26
DRAWN BY: JWT
CHECKED: . . DELTA

REVISIONS

PROJECT NUMBER	SHEET NUMBER
H2615	F2.00

C:\Users\JAMES\Updated\Vcosh\temp\AcPublish_11120\NYCPM-2015.08.25-SHEET.dwg Plotted: Aug. 26, 2015 - 2:02pm by JAMES

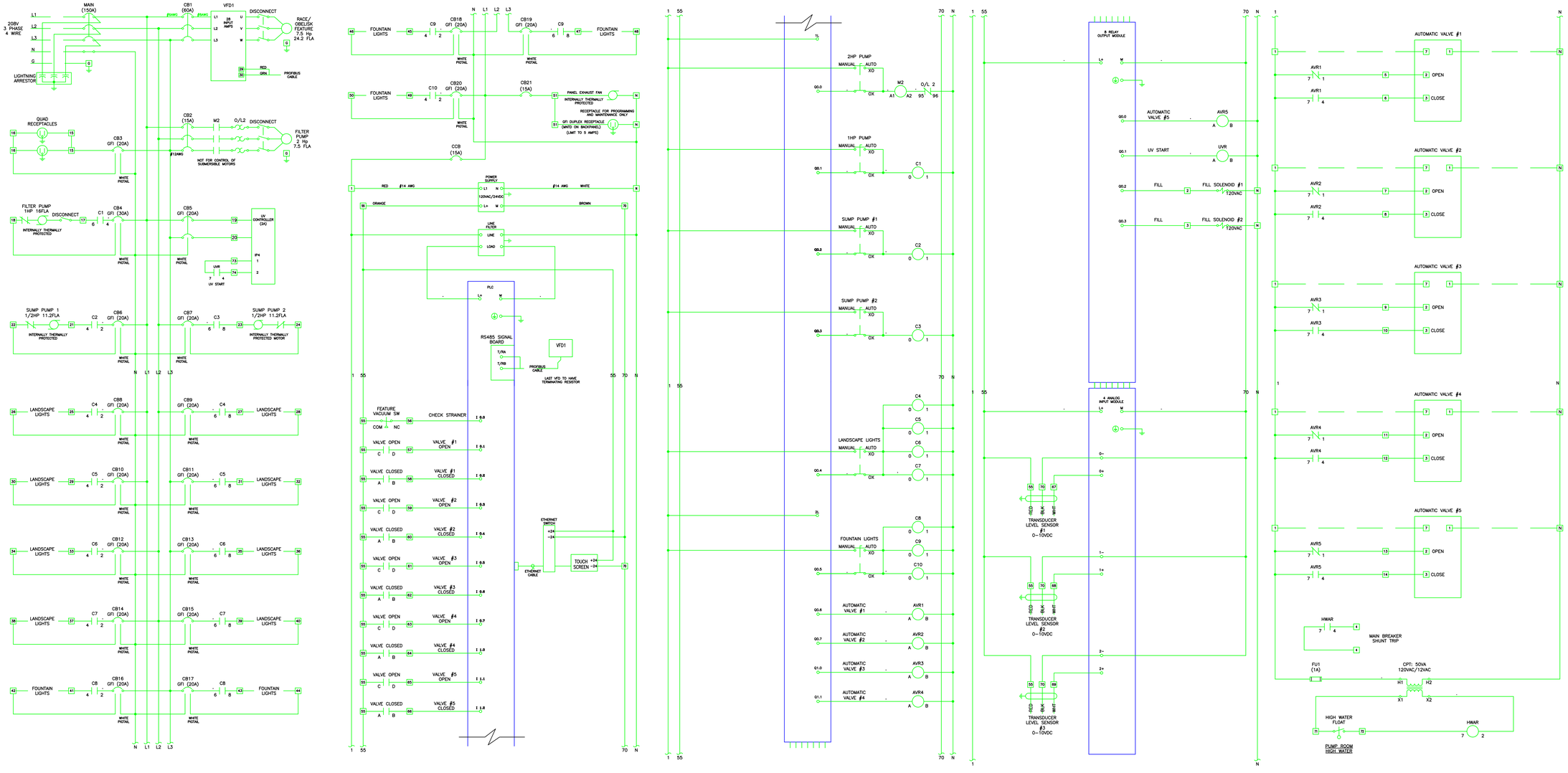

PRELIMINARY DESIGN
NOT FOR CONSTRUCTION

NOTE:

ALL VOLTAGE DROP CALCULATIONS ASSUME 3%VD FROM CONTROL PANEL TO LOAD AND 2%VD FROM SERVICE TO CONTROL PANEL. ALL CONDUIT TO USE LONG RADIUS ELBOWS IN ALL TURNS.

DELTA FOUNTAINS
ARCHITECTURAL & FLOATING FOUNTAINS
11494 COLUMBIA PARK DR. WEST SUITE #4
JACKSONVILLE, FL 32258
V. (904) 886-9030
F. (904) 886-9089
consulting design manufacturing

THIS DRAWING IS THE PROPERTY OF DELTA FOUNTAINS & MAY NOT BE USED WITHOUT WRITTEN PERMISSION FROM DELTA FOUNTAINS

NEW YORK CITY POLICE MEMORIAL
NEW YORK, NY

SHEET TITLE:
CONTROLS LADDER LOGIC DIAGRAM

DATE: 2015.08.26
DRAWN BY: JWT
CHECKED: DELTA

REVISIONS

PROJECT NUMBER	SHEET NUMBER
H2615	F3.00

C:\Users\JAMES\Upgrades\Vcosh\temp\AcPublish_11120\NYCPM-2015.08.25-SHR20.dwg Plotted: Aug. 26, 2015 - 2:02pm by JAMES

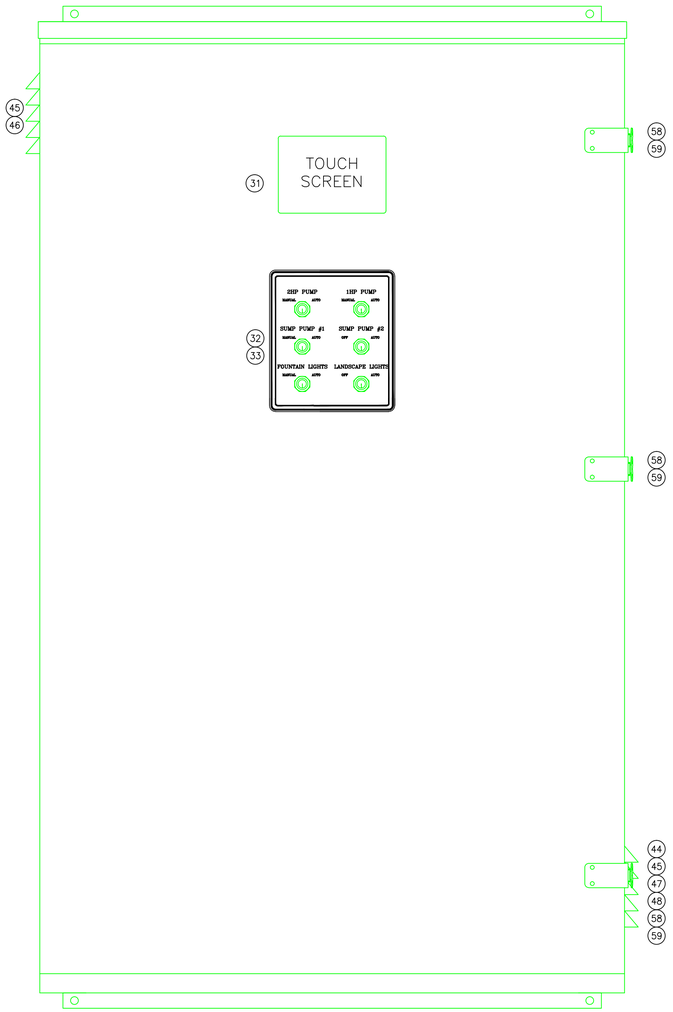

1 FRONT VIEW

NOTES: ENCLOSURE – NEMA 3R, 60"Hx36"Wx12"D, FABRICATED FROM GALVANIZED STEEL.

BACKPANEL – FABRICATED FROM COLD ROLLED STEEL, PAINTED WHITE.

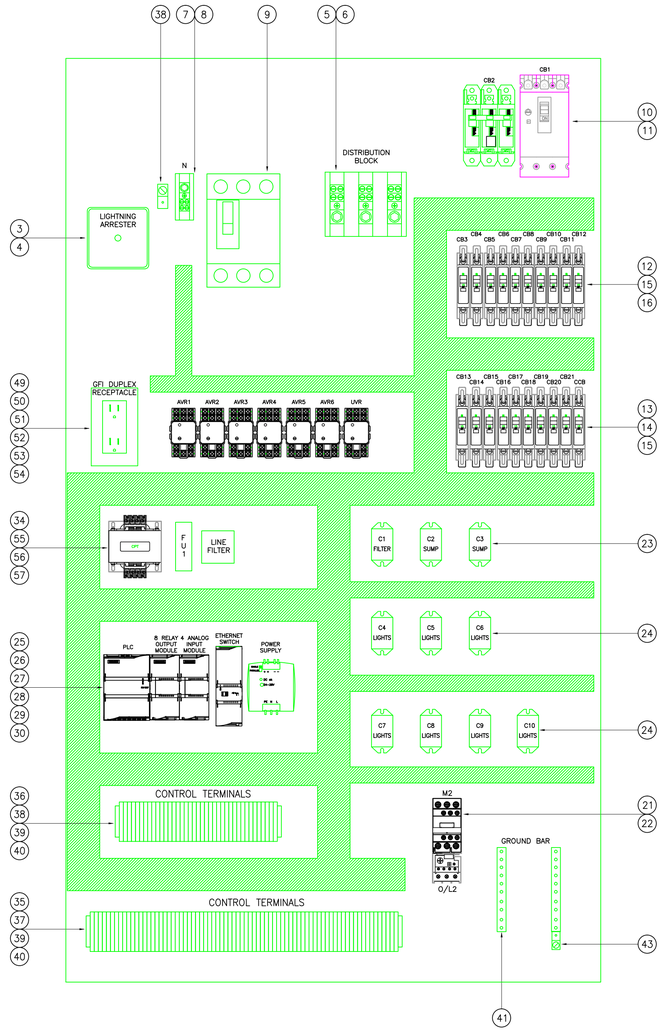

2 BACKPANEL LAYOUT

PROJECT	New York City Police Memorial	DATE	08/27/15
		JOB#	.

BILL OF MATERIAL

ITEM	PART NUMBER	MANUFACTURER	DESCRIPTION	QTY.
1	A60R3612HCR	Hoffman	Enclosure, N3R, Painted Steel	1
2	A60P36	Hoffman	Backpanel	1
3	SDSA3650	Square D	Lightning Arrester, 600V	1
4	QOSAMK	Square D	Lightning Arrester Bracket	1
5	9080 LBA363206	Square D	Distribution Block, 3P	1
6	9080 LB33	Square D	Distribution Block Cover, 3P	1
7	9080 LBA163104	Square D	Distribution Block, 1P	1
8	9080 LB31	Square D	Distribution Block Cover, 1P	1
9	QJ23B150L	Siemens	Circuit Breaker, 3P, 150A	1
10	ED43B060L	Siemens	Circuit Breaker, 3P, 60A	1
11	BQ3B015L	Siemens	Circuit Breaker, 3P, 15A	1
12	QCGF2020	Siemens	Circuit Breaker, 1P, 15A	1
13	QCR1015	Siemens	Circuit Breaker, 1P, 15A	2
14	QCR1020	Eaton	Circuit Breaker, 1P, 20A	1
15	QCGF1020	Eaton	GFI Circuit Breaker, 1P, 20A	17
16	QCGF1030	Eaton	GFI Circuit Breaker, 1P, 30A	1
17	AMCDIN1	Eaton	GFI Circuit Breaker Mounting Clip	18
18	6SE6440-2UC25-5CA1	Siemens	VFD, 208V, 7.5HP	1
19	6SE6400-0GP00-0CA0	Siemens	Gland Plate	1
20	6SE6400-0BP00-0AA1	Siemens	Basic Operator Panel	1
21	3RT2025-1AK60	Siemens	Contactor, IEC Rated 16A	1
22	3RU2126-1JB0	Siemens	Overload Relay, 3P, 7-10A	1
23	2XC22	WWG	Power Relay, 1PDT, 25A	3
24	2XC20	WWG	Power Relay, 2PDT, 25A	7
25	ML100.100	Puls	Power Supply, 120V/24VDC, 100W	1
26	6ES7214-1BG40-0XB0	Siemens	1200 PLC CPU	1
27	6ES7222-1HF30-0XB0	Siemens	8 Relay Output Relay Module	1
28	6ES7231-4HD30-0XB0	Siemens	4 Analog Input Relay Module	1
29	6ES7241-1CH30-1XB0	Siemens	RS485 Signal Board	1
30	6GK7277-1AA10-0AA0	Siemens	Ethernet Switch	1
31	6AV2124-0GC01-0AX0	Siemens	KTP 700 Comfort HMI	1
32	ZB4BG4	Square D	Selector Sw, 2 Pos, Keyed	6
33	ZB4BZ105	Square D	Contact Block, 1 N.O., 1 N.C.	6
34	E3MC3	Corcom	Line Filter	1
35	2004-1301	Wago	Terminal Block, 1P, Gray	76
36	2004-1304	Wago	Terminal Block, 1P, Blue	39
37	2004-1391	Wago	End Plate, Gray	1
38	2004-1392	Wago	End Plate, Orange	1
39	249-116	Wago	Terminal End Section	4
40	8WA746	Siemens	Angle Bracket	6
41	GBK10	Square D	Ground Bar	2
42	KA26U	Burndy	Ground Lug	1
43	KA2U	Burndy	Ground Lug	1
44	4WT42	WWG	Exhaust Fan	1
45	AVK66	Hoffman	Louver Kit	2
46	AFLT66	Hoffman	Filter Kit	1
47	3RP16	WWG	Fan Guard	1
48	3RP10	WWG	Cord Set	1
49	2x4	Steel City	Handy Box	1
50	ELE15-WH-L	ELE Manufacturing	GFI Duplex Receptacle	1
51	8501KU13M1P14V20	Square D	Relay, 3PDT, 120VAC	6
52	8501NR82	Square D	Relay Base	6
53	8501KP12P14V36	Square D	Relay, 2PDT, 12VAC	1
54	8501NR51	Square D	Relay Base	1
55	FNQ-R-1	Bussman	Fuse, 600V, 1 Amp	1
56	BC6031P	Bussman	Fuse Holder, 600V, 1 Pole	1
57	9070T50D13	Square D	Transformer, 50VA, 120/12VAC	1
58	LH-20119	Fab Tech	Wing Turn Catch	3
59	LH-20120	Fab Tech	Special Strike Wing	3
60	Soft Server	Siemens	Software	1

PRELIMINARY DESIGN
NOT FOR CONSTRUCTION

NOTE:

ALL VOLTAGE DROP CALCULATIONS ASSUME 3%VD FROM CONTROL PANEL TO LOAD AND 2%VD FROM SERVICE TO CONTROL PANEL. ALL CONDUIT TO USE LONG RADIUS ELBOWS IN ALL TURNS.

DELTA FOUNTAINS
ARCHITECTURAL & FLOATING FOUNTAINS
11494 COLUMBIA PARK DR. WEST SUITE #4
JACKSONVILLE, FL 32258
V. (904) 886-9030
F. (904) 886-9089
consulting design manufacturing

THIS DRAWING IS THE PROPERTY OF DELTA FOUNTAINS & MAY NOT BE USED WITHOUT WRITTEN PERMISSION FROM DELTA FOUNTAINS

NEW YORK CITY POLICE MEMORIAL
NEW YORK, NY

SHEET TITLE:
CONTROLS LADDER LOGIC DIAGRAM

DATE: 2015.08.26
DRAWN BY: JWT
CHECKED: . DELTA

REVISIONS

PROJECT NUMBER	SHEET NUMBER
H2615	F3.01

C:\Users\JAMES\appdata\local\temp\AcPublish_11120\NYCPM-2015.08.25-SDKCD.dwg Plotted: Aug 28, 2015 - 2:02pm by JAMES

GENERAL ELECTRICAL NOTES:

1. THE INSTALLATION OF ELECTRICAL EQUIPMENT AND WIRING IN WATER CAN PRODUCE EXTREME HAZARDS, IT IS THE RESPONSIBILITY OF THE INSTALLING ELECTRICAL CONTRACTOR TO CONSULT & COMPLY WITH THE LATEST EDITION OF THE NATIONAL ELECTRIC CODE (NEC) PUBLISHED BY THE NATIONAL FIRE PROTECTION ASSOCIATION; QUINCY, MASSACHUSETTS AND SAFETY REGULATIONS PRIOR TO INSTALLATION OF ELECTRICAL EQUIPMENT. IN THE EVENT OF CONFLICTING REQUIREMENTS BETWEEN CONTRACT DOCUMENTS AND ANY LOCAL ELECTRIC CODE OR OTHER GOVERNING ORGANIZATIONS FOR THIS LOCATION, THE MOST STRINGENT SHALL GOVERN AND TAKE PRECEDENCE. IN THIS EVENT, THE ARCHITECT SHALL BE NOTIFIED IMMEDIATELY IN WRITING OF SUCH CONFLICT.
2. IT IS THE ELECTRICAL CONTRACTOR'S RESPONSIBILITY TO VERIFY ALL FIELD DIMENSIONS CRITICAL TO FOUNTAIN EQUIPMENT INSTALLATION AND PERFORMANCE AND REPORT ANY DISCREPANCIES, IN WRITING, TO DELTA FOUNTAINS AND THE ENGINEER UPON IMMEDIATE NOTICE.
3. IT IS THE ELECTRICAL CONTRACTOR'S RESPONSIBILITY TO INSURE THAT ALL ELECTRICAL EQUIPMENT IS INSTALLED AND WIRED BY A QUALIFIED, LICENSED ELECTRICIAN EXPERIENCED IN FOUNTAIN SYSTEM WIRING. DELTA FOUNTAINS ASSUMES NO RESPONSIBILITY OR LIABILITY WHATSOEVER FOR INSTALLATIONS NOT CARRIED OUT BY A QUALIFIED, LICENSED, ELECTRICIAN AND IN ACCORDANCE WITH OUR SHOP DRAWINGS, AND ALL PROVISIONS OF THE LATEST EDITION OF NEC IN GENERAL, ARTICLE 680 SPECIFICALLY, AND LOCAL SAFETY REGULATIONS. ALL DELTA FOUNTAINS ELECTRICAL CONTROL PANELS INCLUDE GFCI'S WHEN AND WHERE REQUIRED, WHEN FURNISHED.
4. A CLASS 'A' GROUND FAULT CIRCUIT INTERRUPTER (GFCI) MUST BE INSTALLED IN EACH BRANCH CIRCUIT SUPPLYING SUBMERSIBLE OR UNDERWATER FOUNTAIN EQUIPMENT. EQUIPMENT OPERATING AT 15 VOLTS OR LESS MUST BE PROTECTED BY SUITABLE TRANSFORMER U.L. LISTED AND MARKED FOR THE APPLICATION.
5. SUBMERSIBLE/UNDERWATER LIGHTING FIXTURES MUST BE INSTALLED FOR OPERATION AT 150 VOLTS LESS BETWEEN CONDUCTORS. SUBMERSIBLE PUMPS MUST OPERATE AT 300 VOLTS OR LESS BETWEEN CONDUCTORS.
6. WET/DRY LIGHTING FIXTURES MUST BE INSTALLED WITH THE TOP OF THE FIXTURE LENS BELOW THE GRATE AND MUST HAVE THE LENS ADEQUATELY GUARDED TO PREVENT CONTACT BY ANY PERSON.
7. SUBMERSIBLE LIGHTING FIXTURES MUST BE INSTALLED WITH THE TOP OF THE FIXTURE LENS A MINIMUM OF 2" BELOW THE NORMAL OPERATION WATER LEVEL AND MUST HAVE THE LENS ADEQUATELY GUARDED TO PREVENT CONTACT BY ANY PERSON.
8. ALL ELECTRICAL EQUIPMENT WHICH DEPENDS ON SUBMERSION FOR SAFE OPERATION MUST BE PROTECTED AGAINST OVERHEATING BY AN INDEPENDENT LOW WATER CUTOFF DEVICE IF THE WATER LEVEL DROPS BELOW NORMAL OPERATING LEVELS, OR CONTAIN AN INTERNAL THERMAL BIMETALLIC AMBIENT COMPENSATING OVERLOAD.
9. MAXIMUM LENGTH OF EXPOSED CORD IN FOUNTAIN IS LIMITED TO 9'. NO ADDITIONAL CORD OR SPLICES OTHER THAN THOSE MADE IN A WATERTIGHT JUNCTION BOX, ARE TO BE MADE IN THE FOUNTAIN. CORDS EXTENDING BEYOND FOUNTAIN PERIMETER MUST BE ENCLOSED IN APPROVED WIRING ENCLOSURES.
10. ALL SUBMERSIBLE LIGHTS AND PUMPS MUST HAVE SUFFICIENT CORD LENGTH TO ALLOW REMOVAL FROM THE WATER FOR RE-LAMPING AND NORMAL MAINTENANCE. FIXTURES CANNOT BE PERMANENTLY IMBEDDED IN THE FOUNTAIN STRUCTURE SO THAT THE WATER LEVEL MUST BE REDUCED OR THE FOUNTAIN DRAINED FOR RE-LAMPING, MAINTENANCE, OR INSPECTION.
11. SUBMERSIBLE EQUIPMENT MUST BE INHERENTLY STABLE OR BE SECURELY FASTENED IN PLACE WITH NON-CORROSIVE FASTENERS SUITABLE FOR THE PURPOSE.
12. UNDERWATER JUNCTION BOXES MUST BE FILLED WITH AN APPROVED RE-ENTERABLE ELECTRICAL POTTING COMPOUND (WAX OR PARAFFIN IS NOT ACCEPTABLE) PRIOR TO FILLING FOUNTAIN AND, AFTER ALL CIRCUITS HAVE BEEN CHECKED, TO PREVENT THE ENTRY OF MOISTURE, AND BE FIRMLY ATTACHED TO SUPPORTS OR DIRECTLY TO THE FOUNTAIN SURFACE AND BONDED AS REQUIRED. ALL CONDUIT STUBBED UP THROUGH THE FOUNTAIN FLOOR MUST BE STAINLESS STEEL. PVC, RED BRASS, AND EVERDUR ARE NOT ACCEPTABLE AS A CONDUIT SUPPORT STUB FOR SUBMERSIBLE JUNCTION BOXES. ALL CONDUIT ENTRIES MUST BE COMPLETELY SEALED PRIOR TO POTTING TO PREVENT COMPOUND FROM ENTERING CONDUIT SYSTEM. AFTER TESTING, JUNCTION BOXES SHALL BE SEALED WITH SCOTCH 3M RE-ENTERABLE COMPOUND OR OTHER APPROVED FILLING COMPOUND. CONFIRM POTTING COMPOUND HAS CURED BEFORE INSTALLING LID ON JUNCTION/DECK BOXES.
13. ALL ELECTRICAL CONDUIT AND CONDUIT FITTINGS BETWEEN SUBMERSIBLE LIGHT FIXTURE NICHES, JUNCTION BOXES AND CONTROL PANELS WILL BE U.L. LISTED RIGID, NONMETALLIC, PVC NEMA, TC-2 MAX. 90°C, SUNLIGHT RESISTANT FOR ABOVE AND BELOW GROUND USE. ALL CONDUITS SHALL BE PROTECTED AT ALL TIMES FROM POSSIBLE WATER INGRESS. USE ONLY APPROVED PRIMER AND PVC GLUE SUITABLE FOR JOINING ALL PVC CONDUITS AND FITTINGS PER MANUFACTURER'S INSTRUCTIONS.
14. ALL UNDERWATER JUNCTION BOXES MUST BE EQUIPPED WITH THREADED CONDUIT ENTRIES AND COMPRESSION TYPE CORD CONNECTORS FOR CORD ENTRY. STRAIN RELIEF CONNECTORS SERVING NICHE-MOUNTED UNDERWATER LIGHTS SHALL BE CAPABLE OF SEALING BOTH THE FIXTURE CORD AND AN AWG #8 BARE BONDING WIRE WHICH MAY BE REQUIRED BY SOME LOCAL CODES.
15. ALL ELECTRICAL EQUIPMENT MUST BE PROPERLY BONDED AND GROUNDED FOR SAFETY, PER THE LATEST NEC AND LOCAL CODE REQUIREMENTS. ALL BONDING LUGS SHALL BE PROVIDED BY INSTALLING ELECTRICAL CONTRACTOR. INSTALLING CONTRACTOR SHALL VERIFY ALL NECESSARY REQUIREMENTS OF LOCAL INSPECTOR BEFORE INSTALLING, AND NOTIFY DELTA FOUNTAINS OF ANY REQUIRED DEVIATIONS FROM SPECIFICATIONS OR PLANS AND NOTES, AND RESOLVE ALL CONFLICTS BEFORE INSTALLING EQUIPMENT. CONTRACTOR TO INSURE THAT ALL BONDING CODES ARE COMPLIED WITH FOR EACH METAL FOUNTAIN EQUIPMENT COMPONENT.
16. ALL CONDUIT CONNECTIONS BETWEEN DISSIMILAR METALS MUST BE MADE WITH DIELECTRIC FITTINGS, AND SEALED WITH DIELECTRIC THREAD COMPOUND TO PREVENT GALVANIC DEGRADATION.
17. THE INSTALLING ELECTRICAL CONTRACTOR WILL VERIFY THAT ALL ELECTRICAL EQUIPMENT GROUNDS WILL HAVE THE SAME REFERENCE POTENTIAL AND WILL GIVE EVIDENCE OF SUCH TO DELTA FOUNTAINS BEFORE ANY EQUIPMENT IS INITIALLY ENERGIZED.
18. THE INSTALLING CONTRACTOR SHALL SIZE ALL FEED-WIRES LEADING TO FOUNTAIN CONTROL PANEL FOR NO MORE THAN 2% VOLTAGE DROP, AND SHALL NOTIFY DELTA FOUNTAINS BEFORE THE CONTROL PANEL IS FABRICATED IF WIRE IS UPSIZED SUCH THAT EXTRA LARGE WIRE LUGS ARE REQUIRED. IT IS THE RESPONSIBILITY OF ELECTRICAL CONTRACTOR TO PROVIDE ANY DISCONNECT REQUIRED BY LOCAL CODE REQUIREMENTS.
19. THE FOUNTAIN CONTROL PANEL SHALL BE ADEQUATELY PROTECTED FROM DEBRIS AND STORED PROPERLY DURING CONSTRUCTION AND PRIOR TO INITIAL OPERATION AND SHALL BE VACUUMED CLEAN AND ALL SCREWS FOR TERMINAL CONNECTIONS TIGHTENED.
20. THE ELECTRICAL CONTRACTOR SHALL ENSURE THAT SUPPLY VOLTAGE IS WITHIN 5% OF DESIGN VOLTAGE WHEN ALL EQUIPMENT IS IN OPERATION AND SHALL RE-TAP TRANSFORMER, UP SIZE WIRE, OR SUPPLY A BUCK AND BOOST TRANSFORMER TO GET SUPPLY VOLTAGE TO NECESSARY LEVEL, IF NECESSARY.
21. ANY AND ALL COSTS ASSOCIATED WITH THE ABOVE ARE THE RESPONSIBILITY OF INSTALLING CONTRACTOR.
22. CONDUITS ENTERING FOUNTAIN SYSTEM CONTROL PANELS SHALL BE INSTALLED INTO BOTTOM OF ENCLOSURE IN THE EVENT WATER ENTERS CONDUIT AND FLOWS INTO PANEL THROUGH CONDUIT OPENINGS. A DRAIN OPENING MUST BE MADE IN BOTTOM OF ENCLOSURE PAN TO ALLOW DRAINAGE OF WATER FROM ENCLOSURE IN THE EVENT OF WATER INGRESS. DO NOT MOUNT CONTROL PANEL WHERE IRRIGATION NOZZLES WILL SPRAY DIRECTLY AT PANEL.
23. PULL CORRECT QUANTITY AND SIZE WIRES WITH SEPARATE GROUND THROUGH CONDUIT INTO JUNCTION BOX. MAKE ALL SPLICES AND CONNECTIONS TIGHT AND WELL INSULATED. CONNECT GROUND WIRE TO GROUND LUGS IN JUNCTION BOX. ALL WIRING AND CONDUIT SHALL BE SIZED BY THE ELECTRICAL CONTRACTOR IN ACCORDANCE WITH THE LATEST EDITION OF THE NEC AND ALL ELECTRICAL CODES AND REGULATIONS. WHERE WIRED CONDUIT SIZES ARE SPECIFIED ON THE DRAWINGS, THEY SHALL BE INTERPRETED AS MINIMUM ALLOWABLE SIZES. ALL CONDUCTORS SHALL BE COPPER WITH INSULATION SUITABLE FOR THE PARTICULAR WIRING LOCATION. MINIMUM ACCEPTABLE INSULATION TYPE IS THWN OR BETTER, SUITABLE FOR BOTH DRY AND WET LOCATIONS. CONDUCTOR INSULATION SHALL BE MOISTURE RESISTANT, FLAME RETARDANT THERMOPLASTIC AS APPROVED BY THE NEC. CONDUCTOR SIZING SHALL BE BASED ON AN AMBIENT TEMPERATURE OF 30 DEGREES CELSIUS AND A CONDUCTOR TEMPERATURE RATING OF 75 DEGREES CELSIUS MAX. PER ARTICLE 310 OF THE NEC. ALL UNDERWATER ELECTRICAL CABLE SHALL EITHER BE ENCASED IN WATERPROOF, SEALED PVC CONDUIT OR SHALL BE RATED FOR CONTINUOUS OPERATION IN UNDERWATER, MARINE ENVIRONMENTS.
24. INSERT EACH SUBMERSIBLE CORD THROUGH THE BRASS CORD SEALS PROVIDED ON THE JUNCTION BOX, AND TIGHTEN COMPLETELY.
25. DO NOT OPERATE SUBMERSIBLE LIGHTS OR PUMPS MORE THAN 10 SECONDS UNLESS COMPLETELY SUBMERGED OR DAMAGE WILL RESULT AND WARRANTIES WILL BE VOIDED.
26. ALL CONDUCTORS FOR FEEDERS WHICH EXCEED 200 FEET IN LENGTH SHALL BE INCREASED 1 TRADE SIZE AND INCREASED AN ADDITIONAL 1 TRADE SIZE FOR EACH ADDITIONAL 100 FEET OF FEEDER CABLE LENGTH.
27. THE INFORMATION SUPPLIED IN THESE DRAWINGS SPECIFIES THE GENERAL REQUIREMENTS OF A COMPLETE FUNCTIONING ELECTRICAL POWER DISTRIBUTION AND CONTROL SYSTEM. THE ELECTRICAL SUBCONTRACTOR SHALL COORDINATE ALL ELECTRICAL INSTALLATION ACTIVITIES WITH THE CONSTRUCTION MANAGER, GENERAL CONTRACTOR, ARCHITECT AND (WITH RESPECT TO WORK PHASE) OTHER SEPARATE CONTRACTORS PERFORMING WORK RELATED TO THE FOUNTAIN INSTALLATION.
28. ALL CONDUCTORS SHALL BE RUN IN RIGID CONDUIT SIZED FOR THE NUMBER OF WIRES CONTAINED WITHIN PER NEC REQUIREMENTS. RIGID CONDUIT SHALL BE CORROSION RESISTANT AND EITHER GALVANIZED STEEL OR RIGID PVC. WHEN CONDUIT IS SUBMERGED OR IN OTHER WET LOCATIONS, RIGID PVC SHALL BE REQUIRED. CONDUCTOR SIZING SHALL BE CORRECTED FOR THE NUMBER OF WIRES TO BE RUN IN A SINGLE CONDUIT OR RACEWAY IN ACCORDANCE WITH THE NEC. ALL CONDUIT LOCATIONS AND ROUTING SHALL BE APPROVED BY THE ARCHITECT BEFORE INSTALLATION.
29. THE WORK TO COMPLETE THE INSTALLATION OF THE FOUNTAIN INCLUDES SUCH NECESSARY MATERIAL AND DEVICES OF A MINOR NATURE THAT MAY NOT BE INDICATED ON THE DRAWINGS OR MENTIONED IN THE SPECIFICATIONS, BUT WHICH ARE NECESSARY FOR THE COMPLIANCE WITH CODES AND FOR THE SUCCESSFUL OPERATION OF THE FEATURE. THE CONTRACTOR SHALL BE ALLOWED NO EXTRA COMPENSATION BECAUSE OF THIS REQUIREMENT.
30. THOROUGHLY TEST ALL FIXTURES, SERVICES AND ALL CIRCUITS FOR PROPER OPERATING CONDITIONS AND FREEDOM FROM GROUNDS AND SHORT CIRCUITS BEFORE ACCEPTANCE IS REQUESTED. ALL EQUIPMENT, APPLIANCES AND DEVICES SHALL BE OPERATED UNDER LOAD CONDITIONS.
31. THERMAL OVERLOAD RELAYS SHALL BE SET AT NOT MORE THAN 115% OF MOTOR FULL LOAD CURRENT AND/OR IN ACCORDANCE WITH MANUFACTURER'S REQUIREMENTS.
32. ALL CONNECTIONS MUST BE RECHECKED BEFORE START UP AND ONE MONTH AFTER STARTUP BY A QUALIFIED TECHNICIAN.
33. ALL G.F.C.I. PROTECTED CIRCUITS MUST HAVE A SEPARATE NEUTRAL.
34. ALL G.F.C.I. BREAKERS HAVE PIGTAILS WIRED TO THE NEUTRAL BAR.
35. CONTRACTOR TO ENSURE THAT ALL BONDING CODES ARE COMPLIED WITH FOR EACH METAL FOUNTAIN EQUIPMENT COMPONENT.
36. WIRES FOR WATER LEVEL SENSOR MUST BE RUN IN A SEPARATE CONDUIT FROM THE FOUNTAIN TO THE CONTROL PANEL.
37. ALL CONDUIT PENETRATIONS THROUGH STRUCTURE WALLS INTO OPEN AREAS BELOW FOUNTAIN STRUCTURE MUST HAVE ALLOWANCES MADE FOR SETTLEMENT.
38. ALL CONDUIT INSTALLATION IN TRADE AREAS BELOW THE FOUNTAINS SHALL BE INSTALLED WITH E.M.T. AND IN THE LEVEL BELOW AND WITH E.M.T. STRAPS PER N.E.C. AND SPECIFICATIONS.
39. FLOOR MOUNTED CONTROL CENTERS AND TRANSFORMERS FOR FOUNTAIN RELATED EQUIPMENT SHALL BE INSTALLED ON A 4" CONCRETE HOUSEKEEPING PAD IF INSTALLED IN AN EQUIPMENT ROOM OR A PVC HOUSEKEEPING PAD IF INSTALLED IN A FIBERGLASS EQUIPMENT ROOM.
40. CONTRACTOR INSTALLING FOUNTAIN MANUFACTURER SUPPLIED DECK BOXES IN CONCRETE FOR FOUNTAIN NICHE LIGHTING IS TO ENSURE THAT ALL OPEN CONDUIT PORTS ARE PLUGGED AND ARE WATERTIGHT PRIOR TO SLAB POUR AROUND DECK BOXES.
41. ALL PENETRATIONS THROUGH OUTSIDE WALLS TO BELOW GRADE SHALL BE SEALED PER BUILDING SPECIFICATIONS. USING "EASY-LINK SEALS" IS RECOMMENDED.
42. ALL CONNECTIONS IN THE FOUNTAIN SHALL BE MADE WITH THE ASSISTANCE OF A PLUMBER, USING TEFLON TAPE OR TEFLON PASTE TO ELIMINATE ALL LEAKS. USE ONLY TAPERED (N.P.T.) BRASS OR STAINLESS STEEL FITTINGS OR NIPPLES. THE USE OF GALVANIZED, PVC OR BLACK STEEL IS UNACCEPTABLE.
43. CONDUITS ARE DRAWN FOR CLARITY AND DO NOT NECESSARILY SHOW EXACT ROUTING. CONTRACTOR SHALL INSTALL CONDUITS IN COMPLIANCE WITH NEC CODE, WHICH THERE SHALL BE NO MORE THAN THE EQUIVALENT OF FOUR QUARTER BENDS (360 DEGREES TOTAL) BETWEEN PULL POINTS, E.G., CONDUIT BODIES AND BOXES.
44. CONTRACTOR SHALL OBTAIN ALL NECESSARY INSTALLATION PERMITS AND INSPECTIONS.
45. ALL COMPONENT ITEMS USED IN THE PRODUCTION OF DELTA FOUNTAINS' PRODUCTS ARE U.L. LISTED WHENEVER SUCH LABELING IS AVAILABLE FROM THE SOURCE EQUIPMENT OR MATERIAL.
46. SHOULD ANY PRODUCT REQUIRE A 'THIRD PARTY' LABEL OR CERTIFICATION AS AN ASSEMBLY (E.G., N.E.C., U.L. OR E.T.L. LISTING) SUCH REQUIREMENTS SHALL BE DETERMINED, CONTRACTED FOR, AND PAID BY OTHERS.
47. DELTA FOUNTAINS SHALL NOT BE RESPONSIBLE OR LIABLE IN ANY MANNER WHATSOEVER FOR SPECIAL LABELING OR CERTIFICATION REQUIREMENTS, INCLUDING THIRD PARTY PRODUCT TESTING UNLESS SPECIFICALLY INCLUDED IN ITS PROPOSALS, QUOTATIONS, DRAWING DESCRIPTIONS AND DETAILS, REGARDLESS OF PROJECT SPECIFICATION OR CODE REQUIREMENTS.

1. ALL METAL PARTS WITHIN 5 FEET OF THE INSIDE WALLS OF FOUNTAIN AND ALL METAL PARTS OF ASSOCIATED ELECTRICAL EQUIPMENT MUST BE BONDED TOGETHER PER NEC 680.
2. ALL BONDING CONDUCTORS SHALL BE BARE #8 SOLID COPPER.
3. ALL BONDING SHALL BE CONTINUOUS WITHOUT SPLICES. ALL CONNECTIONS SHALL BE MADE BY EXOTHERMIC WELD OR FITTING APPROVED FOR SUCH USE IN FOUNTAINS AND POOLS.
4. IF EXPOXY COATED REBAR IS SPECIFIED THE CONTRACTOR MUST USE A #8 SOLID COPPER WIRE GRID FOR BONDING IN THE CONCRETE OF ALL AREAS CONTAINING WATER OR COMING IN CONTACT WITH WATER IN THE FOUNTAIN. CONTRACTOR TO CONFORM TO NEC AND LOCAL JURISDICTIONAL CODE REQUIREMENTS FOR THE BONDING.

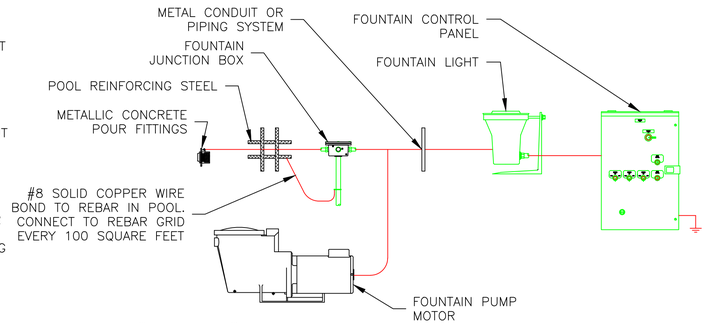

1 / F3.00 TYPICAL FOUNTAIN "BONDING" SCHEMATIC NTS

1. ALL METAL PARTS WITHIN 5 FEET OF THE INSIDE WALLS OF FOUNTAIN AND ALL METAL PARTS OF ASSOCIATED ELECTRICAL EQUIPMENT MUST BE BONDED TOGETHER PER NEC 680 (SEE BONDING SCHEMATIC ABOVE).

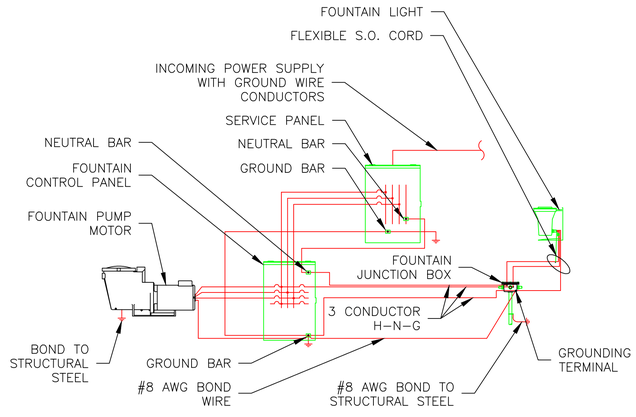

2 / F3.00 TYPICAL FOUNTAIN "GROUNDING" SCHEMATIC NTS

CONTROL SYSTEM POWER REQUIREMENT:
120/208 VOLT, THREE PHASE, 4-WIRE + GND.

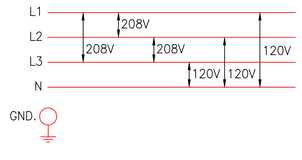

3 / F3.00 ELECTRICAL POWER SUPPLY OPTIONS NTS

DELTA FOUNTAINS
ARCHITECTURAL & FLOATING FOUNTAINS
11494 COLUMBIA PARK DR. WEST SUITE #4
JACKSONVILLE, FL 32258
V. (904) 886-9030
F. (904) 886-9089
consulting design manufacturing

THIS DRAWING IS THE PROPERTY OF DELTA FOUNTAINS & MAY NOT BE USED WITHOUT WRITTEN PERMISSION FROM DELTA FOUNTAINS

NEW YORK CITY POLICE MEMORIAL
NEW YORK, NY

SHEET TITLE:
POWER SUPPLY & BONDING DETAILS

DATE: 2015.08.26
DRAWN BY: JWT
CHECKED: DELTA

REVISIONS

PROJECT NUMBER	SHEET NUMBER
H2615	F3.10

C:\Users\JAMES\Upgrades\Vcosh\temp\AcPublish_11120\NYCPM-2015.08.25-SHEET.dwg Plotted: Aug. 26, 2015 - 2:02pm by JAMES

GENERAL NOTES

1. FINAL NOZZLE INSTALLATION AND ADJUSTMENT FOR POSITIONING AND THROTTLING TO ACHIEVED SPECIFIED PERFORMANCES FOR ALL DISPLAY DISCHARGE POINTS TO BE PERFORMED BY INSTALLING CONTRACTOR.
2. THE EQUIPMENT ROOM LOCATION IS SHOWN IN GENERAL VICINITY ONLY. VERIFY WITH THE ARCHITECTURAL DRAWINGS FOR THE EXACT LOCATION OF THE EQUIPMENT ROOM AND PROPER ELEVATION.
3. PIPE ROUTING ON THE DRAWINGS IS DIAGRAMMATIC AND IN SOME INSTANCES EXAGGERATED FOR CLARITY. THE CONTRACTOR SHALL DETERMINE THE EXACT ROUTING AT THE SITE TO AVOID CONFLICT WITH SITE CONDITIONS. ANY ROUTING WHICH CREATES A TRAPPED CONDITION IN THE PIPING MUST BE CALLED TO THE ATTENTION OF THE FOUNTAIN CONSULTANT BEFORE THE PIPE IS INSTALLED.
4. ALL PIPING SHALL BE INSTALLED TO PREVENT FREEZING. SYSTEM TO BE DRAINED AND WINTERIZED DURING WINTER MONTHS IF FOUNTAIN IS NOT IN OPERATION.
5. ALL PIPING BETWEEN THE WATER FEATURES AND EQUIPMENT ROOM SHALL BE INSTALLED SLOPED TOWARD THE EQUIPMENT ROOM A MINIMUM OF 2% UNLESS OTHERWISE INDICATED ON THE DRAWINGS.
6. THE WORK TO COMPLETE THE INSTALLATION OF THE FOUNTAIN INCLUDES SUCH NECESSARY MATERIAL AND DEVICES OF A MINOR NATURE THAT MAY NOT BE INDICATED ON THE DRAWINGS OR MENTIONED IN THE SPECIFICATIONS, BUT WHICH ARE NECESSARY FOR THE COMPLIANCE WITH CODES AND FOR THE SUCCESSFUL OPERATION OF THE FEATURE. THE CONTRACTOR SHALL BE ALLOWED NO EXTRA COMPENSATION BECAUSE OF THIS REQUIREMENT.
7. THOROUGHLY TEST ALL FIXTURES, SERVICES AND ALL CIRCUITS FOR PROPER OPERATING CONDITIONS AND FREEDOM FROM GROUNDS AND SHORT CIRCUITS BEFORE ACCEPTANCE IS REQUESTED. ALL EQUIPMENT, APPLIANCES AND DEVICES SHALL BE OPERATED UNDER LOAD CONDITIONS.
8. CONTRACTOR SHALL ENSURE THAT INSTALLATION COMPLIES WITH ALL APPLICABLE NATIONAL, LOCAL CODES AND INTERNATIONAL CODES AND PROJECT SPECIFICATIONS.
9. PRIOR TO ANY FINISHING MATERIALS (I.E. LIGHTS, JETS, COVER PLATES ETC.) BEING INSTALLED, ALL FOUNTAINS SHALL BE TESTED FOR LEAKS FOR A MINIMUM OF 72 HOURS AND ALL WATERPROOFING AND TILE WORK SHALL BE COMPLETED.
10. CONTRACTOR SHALL FIELD VERIFY ALL DIMENSIONS.
11. CONSULT ARCHITECTURAL, STRUCTURAL, MECHANICAL, AND ELECTRICAL DRAWINGS FOR ADDITIONAL DETAILS NOT SHOWN ON THESE DRAWINGS.
12. WHERE APPLICABLE, ALL WEIRS SHALL BE INSTALLED WITH AN ACCURACY OF "+" OR "–" 1/16" OVER THE ENTIRE WEIR LENGTH. UNLESS OTHERWISE NOTED, REFER TO THE ARCHITECTURE DRAWINGS FOR WEIR DETAILS.
13. CONTRACTOR SHALL PROVIDE ALL CONCRETE WORK AS REQUIRED BY ALL MECHANICAL AND ELECTRICAL FOUNTAIN EQUIPMENT REQUIREMENTS INCLUDING, BUT NOT LIMITED TO, HOUSEKEEPING PADS, LOCK–DOWN SLABS, AND THRUST BLOCKS WHERE INDICATED.
14. CONTRACTOR SHALL PROVIDE ALL UTILITIES SUCH AS POWER SUPPLIES, WATER SUPPLIES, AND SEWER CONNECTIONS UNDER THE BUILDING CONTRACT UP TO THE FOUNTAIN CONTROLS, EQUIPMENT AND/OR FOUNTAIN FITTINGS WHERE INDICATED.
15. CONTRACTOR SHALL PROVIDE AND IS RESPONSIBLE FOR ALL ELEVATION AND X–Y COORDINATES RELATING TO ALL FOUNTAIN EQUIPMENT INCLUDING VAULTS, FOUNTAIN FLOORS, AND PUMPS.
16. CONTRACTOR/INSTALLER IS RESPONSIBLE FOR CONFIRMING AND CORRELATING ALL DIMENSIONS AT JOBSITE. DELTA FOUNTAINS IS NOT RESPONSIBLE FOR CONSTRUCTION/INSTALLATION MEANS, METHODS, TECHNIQUES, SEQUENCES, STEPS, OR PROCEDURES, OR FOR ANY SAFETY REQUIREMENTS, CODES, PRECAUTIONS, RULES, REGULATIONS, OR PROGRAMS PERTAINING TO THE CONSTRUCTION PROJECT, INCLUDING, BUT NOT LIMITED TO OSHA CONFINED SPACE REQUIREMENTS FOR EQUIPMENT ROOMS.
17. ALL COMPONENT ITEMS USED IN THE PRODUCTION OF OUR PRODUCTS ARE U.L. LISTED WHENEVER SUCH LABELING IS AVAILABLE FROM THE SOURCE EQUIPMENT OR MATERIAL.
18. SHOULD ANY PRODUCT REQUIRE A "THIRD PARTY" LABEL OR CERTIFICATION AS AN ASSEMBLY (E.G., N.E.C., U.L. OR E.T.L. LISTING) SUCH REQUIREMENTS SHALL BE DETERMINED, CONTRACTED FOR, AND PAID BY OTHERS.
19. DELTA FOUNTAINS SHALL NOT BE RESPONSIBLE OR LIABLE IN ANY MANNER WHATSOEVER FOR SPECIAL LABELING OR CERTIFICATION REQUIREMENTS, INCLUDING THIRD PARTY PRODUCT TESTING UNLESS SPECIFICALLY INCLUDED IN ITS PROPOSALS, QUOTATIONS, DRAWING DESCRIPTIONS AND DETAILS, REGARDLESS OF PROJECT SPECIFICATION OR CODE REQUIREMENTS.
20. EQUIPMENT MANUFACTURED, SUPPLIED AND OTHERWISE FURNISHED BY DELTA FOUNTAINS IS PRIMARILY DESIGNED FOR EMBEDMENT OR CASTING DIRECTLY INTO CONCRETE OR GUNITE STRUCTURAL MATERIAL. IT IS NOT DESIGNED FOR NATURAL OR SYNTHETIC LINER OR MEMBRANE INSTALLATION INCLUDING FIBERGLASS OR METAL LINERS, SHELLS, COVERS, OR CLADDING. ANY SUCH REQUIREMENT FOR LINER OR MEMBRANE INSTALLATION OR ADAPTATION IS THE RESPONSIBILITY OF THE SPECIFIER, PURCHASER AND INSTALLER, INCLUDING BUT NOT LIMITED TO FLANGES, CLAMPING DEVICES, GASKETS, FASTENING DEVICES, COATINGS, ADHESIVES OR BONDING AGENTS.
21. FATAL SUCTION ENTRAPMENT CAN OCCUR IF FOUNTAIN MECHANICAL EQUIPMENT AND PIPING IS NOT INSTALLED CORRECTLY AS SHOWN. ANTI–VORTEX PLATES MUST BE SECURELY FASTENED TO SUMPS AND/OR FOUNTAIN FLOOR USING SUITABLE VANDAL RESISTANT SAFETY FASTENERS AND ANCHORS AT ALL TIMES DURING OPERATION OF FOUNTAIN SYSTEM.
22. NOTWITHSTANDING THE CONTRACT DOCUMENTS, INCLUDING ARCHITECT'S FINAL "FOR CONSTRUCTION" PLANS AND SPECIFICATION DATA, THE FOUNTAIN SYSTEM MUST BE INSTALLED IN ACCORDANCE WITH DELTA FOUNTAINS FINAL AND APPROVED SET OF SHOP/INSTALLATION DRAWINGS AND DETAILS OR FOUNTAIN PRODUCT WARRANTY AND SYSTEM PERFORMANCE GUARANTEE IS VOID.
23. WRITTEN DIMENSIONS SHALL TAKE PRECEDENCE OVER SCALED MEASUREMENTS.
24. DELTA FOUNTAINS RECOMMENDS ALL FOUNTAINS BE PROPERLY WATERPROOFED BY SPECIFIED APPROVED MEANS AND ALL FOUNTAIN COMPONENTS BE PROPERLY SEALED WITH A SUITABLE WATERPROOF CAULKING COMPOUND TO ENSURE A WATERTIGHT FOUNTAIN INSTALLATION.
25. ANY WATERPROOFING DETAILS OR SPECIFICATIONS THAT MAY APPEAR ON DELTA FOUNTAINS PLANS OR EQUIPMENT DETAILS ARE FOR GENERAL REFERENCE ONLY AND SHALL NOT BE INTERPRETED OR RELIED UPON AS A FORMAL SPECIFICATION OR RECOMMENDATION. CONVERSELY, THE ABSENCE OF WATERPROOFING DETAILS OR SPECIFICATION ON DELTA FOUNTAINS PLANS, DETAILS OR PRODUCT SHEETS DO NOT IMPLY THAT WATERPROOFING IS NOT A PROJECT REQUIREMENT.
26. IT IS THE RESPONSIBILITY OF THE PROJECT ARCHITECT/ENGINEER TO SPECIFY ANY AND ALL WATERPROOFING REQUIREMENTS, PRODUCTS, INSTALLATION/APPLICATION MEANS, PROCEDURES, AND OTHER DETAILS AS MAY BE NECESSARY AND REQUIRED FOR THE FOUNTAIN STRUCTURE AND FOUNTAIN COMPONENTS.
27. IT IS THE RESPONSIBILITY OF THE WATERPROOFING CONTRACTOR TO REVIEW THE PROJECT SPECIFICATIONS FOR WATERPROOFING REQUIREMENTS FOR THE FOUNTAIN AND RELATED COMPONENTS AND PROVIDE THE SPECIFIED WATERPROOFING PRODUCTS AND SYSTEMS TO ENSURE WATERPROOF INTEGRITY OF THE FOUNTAIN SYSTEM.
28. IT IS THE RESPONSIBILITY OF THE FOUNTAIN EQUIPMENT INSTALLER TO COORDINATE ALL WATERPROOFING MATERIALS, SYSTEMS, APPLICATIONS, PROCEDURES, MEANS AND METHODS WITH THE WATERPROOFING CONTRACTOR, IN STRICT ACCORDANCE WITH THE PROJECT SPECIFICATIONS.
29. DELTA FOUNTAINS ASSUMES NO RESPONSIBILITY OR LIABILITY WHATSOEVER FOR ANY WATERPROOFING ISSUES RELATED TO ITS DESIGN PACKAGE, SCOPE OF WORK, OR EQUIPMENT SUPPLY UNDER ANY CIRCUMSTANCES. IF THE FOUNTAINS CONTRACTOR/WATERPROOFER HAS QUESTIONS PERTAINING TO WATERPROOFING, THEY SHALL BE DIRECTED TO THE PROJECT ARCHITECT/ENGINEER WHO IS SOLELY RESPONSIBLE FOR SUCH MATTERS.
30. ALL FOUNTAIN SYSTEM EQUIPMENT AND COMPONENTS FURNISHED BY DELTA FOUNTAINS IS DESIGNED AND MANUFACTURED FOR USE IN FRESH WATER APPLICATIONS ONLY. DO NOT INSTALL OR OPERATE ANY EQUIPMENT IN SALT, BRINE, OR BRACKISH WATER OF ANY KIND OR WARRANTY IS VOID.
31. DUE TO OUR CONTINUING PRODUCT IMPROVEMENT, DELTA FOUNTAINS RESERVES THE RIGHT TO CHANGE PRODUCT AND SYSTEM SPECIFICATIONS WITHOUT NOTICE.
32. DELTA FOUNTAINS SHALL NOT BE RESPONSIBLE OR LIABLE FOR ANY CIVIL OR STRUCTURAL DESIGN DRAWINGS, DETAILS, NOTATIONS, OR ANY OTHER ASPECTS OF THE PROJECT REGARDING FOUNTAIN LAYOUT, STRUCTURE OR CONSTRUCTION/BUILDING PRACTICES, INCLUDING, BUT NOT LIMITED TO, SOIL INTEGRITY, CONCRETE DESIGN, SPECIFICATIONS, AND SLAB POUR METHODS, CONCRETE STRUCTURAL WATERPROOFING SPECIFICATIONS, MATERIALS, AND METHODS, ETC. UNLESS OTHERWISE SPECIFICALLY STATED.
33. ANY STRUCTURE DEPICTED OR APPEARING ON OUR PLANS SHALL BE SHOWN SOLELY FOR DIMENSIONAL REFERENCE AND GENERAL STRUCTURAL ORIENTATION IN ORDER TO ADEQUATELY IDENTIFY, COORDINATE, ORIENT, LOCATE AND INSTALL OUR EQUIPMENT PACKAGE, AND SHALL NOT BE RELIED ON FOR ANY OTHER PURPOSES.
34. CLIENT IS ADVISED TO ENLIST THE SERVICES OF A LICENSED PROFESSIONAL ENGINEER FAMILIAR AND EXPERIENCED WITH SUCH WORK WHEN DESIGNING/CONSTRUCTING ANY FOUNTAIN OR EQUIPMENT ROOM STRUCTURE, WHO SHALL ACCEPT COMPLETE RESPONSIBILITY AND LIABILITY FOR ALL STRUCTURAL, GEOTECHNICAL, AND CIVIL ENGINEERING DETAILS PERTAINING TO THE PROJECT.
35. CONTRACTOR IS ADVISED TO ENLIST THE SERVICES OF A LICENSED PROFESSIONAL LANDSCAPE ARCHITECT TO COORDINATE LANDSCAPE, HARDSCAPE, AND TOPOGRAPHICAL ENVIRONMENT SURROUNDING THE FOUNTAIN AREA SO THAT PROPER PLANT MATERIAL AND GROUND COVER IS SPECIFIED TO ENSURE EXCESS DEBRIS WILL BE KEPT AWAY FROM, AND OUT OF THE FOUNTAIN SYSTEM. PROPER SLOPE OF GRADE IS MANDATORY TO KEEP RAIN WATER AND IRRIGATION WATER FROM ENTERING INTO THE FOUNTAIN BASIN AND EQUIPMENT ROOM OR ENCLOSURE.
36. REFER TO MECHANICAL AND ELECTRICAL NOTES ON DRAWINGS FOR FURTHER INFORMATION.
37. THE EQUIPMENT VAULT IS PRE–WIRED AT THE FACTORY FOR TESTING PURPOSES. IN THE EVENT THE LOCAL AUTHORITY, HAVING JURISDICTION OVER THE INSTALLATION OF THE VAULT AND FINAL PASS/FAIL INSPECTION, REQUIRES ANY MODIFICATIONS TO THE CONDUIT OR WIRING AS INSTALLED, THE CONTRACTOR WILL BE RESPONSIBLE FOR MAKING THE CHANGES OR MODIFICATIONS AS REQUIRED TO CONFORM TO ALL LOCAL CODES.

PRESSURE TESTING

1. PERFORM TESTS IN THE PRESENCE OF THE OWNER, ARCHITECT, OR AUTHORIZED REPRESENTATIVE FOR DESIGNATED DURATION WITH NO PRESSURE LOSS OR NOTICEABLE LEAKS.
2. DO NOT INCLUDE EQUIPMENT IN TESTS WHICH COULD BE DAMAGED BY HIGH PRESSURE.
3. FLUSH OUT ALL PIPES WITH CLEAN WATER PRIOR TO PERFORMING LEAK TESTS.
4. PERFORM TESTS AS FOLLOWS:

SYSTEM	TEST PRESSURE	MEDIUM	DURATION
WATER	150 % OF OPERATING PRESSURE	WATER	8 HOURS
DRAINAGE	10FT. OVER HIGHEST PIPE INVERT	WATER	24 HOURS

5. AUTOMATIC MAKE–UP WATER SYSTEMS SHALL BE THOROUGHLY TESTED AND OPERATIVE AT THE TIME OF FINAL OBSERVATION.
6. AFTER THE SYSTEM HAS OPERATED FOR ONE WEEK, CONTRACTOR AND OWNER'S REPRESENTATIVE SHALL INSPECT WATER MAKE–UP RATES AND AGREE THAT WATER USAGE IS APPROPRIATE FOR A SYSTEM OF THIS TYPE, ARE WITHIN LOCAL ORDINANCES OR CODES, AND THAT SUCH RATES ARE NOT INDICATIVE OF EXCESSIVE LEAKAGE FROM SYSTEM. A WATER METER SHALL BE PLACED ON THE FILL LINE FOR THIS PURPOSE, IF NECESSARY TO DOCUMENT PRECISE WATER USAGE.

GENERAL PIPING NOTES

1. IT IS THE INSTALLING CONTRACTOR'S RESPONSIBILITY TO VERIFY ALL FIELD DIMENSIONS CRITICAL TO FOUNTAIN EQUIPMENT INSTALLATION AND PERFORMANCE AND REPORT ANY DISCREPANCIES, IN WRITING TO DELTA FOUNTAINS AND THE ARCHITECT UPON DISCOVERY. REFER TO SPECIFICATION SECTION 3.1 "EXAMINATION" FOR FURTHER INSTRUCTION AND CLARIFICATION.
2. IT IS THE RESPONSIBILITY OF THE INSTALLING CONTRACTOR TO CHECK AND COMPLY WITH ALL APPLICABLE NATIONAL AND LOCAL PLUMBING CODES PRIOR TO INSTALLATION OF EQUIPMENT. LOCAL CODES TAKE PRECEDENCE OVER GENERAL NOTES WHERE DISCREPANCIES OR CONFLICTS EXIST.
3. ALL FOUNTAIN PIPING PENETRATIONS THROUGH ANY CONCRETE WALL OR FLOOR MUST BE MADE WITH STAINLESS STEEL PIPE APPROPRIATE FOR THE APPLICATION, AND MUST BE FLASHED OR FITTED WITH A WATERSTOP FLANGE TO PREVENT LEAKAGE. FOR PIPE PENETRATIONS OVER 4" PIPE SIZE USE BACK TO BACK P.V.C. FLANGES WITH STAINLESS STEEL BOLTS AND HARDWARE FOR WATERSTOP.
4. INTERCONNECTING PIPING AND FITTINGS INSIDE EQUIPMENT ROOM IS SCHEDULE 80 P.V.C.
5. INTERCONNECTING PIPING AND FITTINGS BETWEEN THE FEATURE AND EQUIPMENT ROOM IS SCHEDULE 80 P.V.C. OR COPPER AS SUITABLE FOR THE WORKING PRESSURE OF THE SYSTEM SPECIFICATION REQUIREMENTS AND LOCAL CODES. IF STEEL OR CAST IRON PIPING IS SPECIFIED, IT MUST HAVE HOT–DIPPED GALVANIZED OR COAL TAR EPOXY COATING. REFER TO PROJECT SPECIFICATIONS FOR EXCEPTIONS.
6. ALL PIPE CONNECTIONS BETWEEN DISSIMILAR METALS MUST BE MADE WITH DIELECTRIC FITTINGS AND DIELECTRIC THREAD SEALING COMPOUND TO PREVENT GALVANIC DEGRADATION.
7. SUCTION EYE OF PUMP MUST BE LOCATED BELOW FOUNTAIN FLOOR ELEVATION IF FLOODED–END–SUCTION TYPE, AND NOT MORE THAN 4' ABOVE FOUNTAIN FLOOR ELEVATION IF SELF–PRIMING TYPE. ALL REDUCING FITTINGS MUST BE CONCENTRIC TYPE ON DISCHARGE LINE AND ECCENTRIC TYPE ON SUCTION LINE..
8. SUCTION LINE MUST BE A STRAIGHT RUN INTO THE PUMP EYE OF AT LEAST 8 PIPE DIAMETERS WITH NO LOOPS, HIGH POINTS, OR TRAPS.
9. USE LONG RADIUS ELBOWS ON ALL DIRECTIONAL CHANGES ON SUCTION AND DISCHARGE LINES, IN SOME INSTANCES, PIPING DIAGRAMS ARE EXAGGERATED FOR PURPOSES OF CLARITY. MAKE ALL SUCTION AND DISCHARGE PIPE RUNS USING THE MOST DIRECT ROUTES POSSIBLE AND USING THE MINIMUM NUMBER OF FITTINGS POSSIBLE. SLOPE ALL LINES DOWN TO PUMP, IN ALL CASES, WITH NO LOOPS, TRAPS, OR HIGH POINTS.
10. ON SUCTION LINES USE ONLY LUG TYPE BUTTERFLY VALVES, FULL–PORT, OR GATE TYPE VALVES. DO NOT REGULATE OR ADJUST FLOW FROM SUCTION SIDE OF PUMP. USE SUCTION VALVES FOR EQUIPMENT ISOLATION PURPOSES ONLY.
11. ON DISCHARGE LINES USE ONLY LUG TYPE BUTTERFLY, GLOBE, BALL, PLUG OR OTHER LOW LOSS INFINITELY ADJUSTABLE VALVES FOR ISOLATION AND FLOW REGULATION.
12. AN IN–LINE BASKET STRAINER IS RECOMMENDED ON THE SUCTION SIDE OF PUMPS, WITH BASKET PERFORATIONS PROPERLY SIZED TO PROTECT THE PUMP IMPELLER, AND FOUNTAIN NOZZLE/JET ORIFICES.
13. PROVIDE ADEQUATE OVERFLOW DRAIN AND FILL LINE CAPACITY FOR THE FOUNTAIN SYSTEM.
14. THE PIPING SYSTEM SHALL BE WATER PRESSURE TESTED FOR 24 HOURS PRIOR TO BACKFILLING AND SHALL THEN BE BURIED AND/OR SUPPORTED AS REQUIRED TO PROTECT THE INTEGRITY OF MECHANICAL SYSTEM. (REFER TO PVC INSTALLATION NOTES).
15. INSTALLING CONTRACTOR TO INSTALL THRUST BLOCKS AT ALL PIPING INTERSECTIONS ON SUBTERRANEAN PIPING RUNS.
16. INSTALLING CONTRACTOR IS RESPONSIBLE FOR ALL PIPE SUPPORTS AND HANGERS AS REQUIRED. ALL PIPING IN OPEN AREAS BELOW THE FOUNTAIN SHALL BE INSTALLED FREEHANGING FROM THE CEILING IN THE LEVEL BELOW WITH PIPE HANGERS PER LOCAL CODE AND SPECIFICATIONS.
17. INSTALLER SHALL PROVIDE ADEQUATE ACCESS, LIGHTING, DRAINAGE AND VENTILATION IN EQUIPMENT ROOM TO PREVENT FLOODING, CONDENSATION OR OVERHEATING OF EQUIPMENT, AND COMPLY WITH ALL OSHA CONFINED SPACE REGULATIONS AND REQUIREMENTS, BEFORE, DURING AND AFTER SYSTEM INSTALLATION.
18. ANY PRESSURIZED CITY WATER LINES SUPPLYING THE FOUNTAIN SYSTEM SHALL BE OF TYPE K COPPER AND SHALL BE PROTECTED BY AN APPROVED BACKFLOW PREVENTION DEVICE AND PRESSURE REDUCING VALVE SET AT 50 PSI MAXIMUM PRESSURE AND MINIMUM OF 40 PSI.
19. THE INCOMING WATER SUPPLY LINE PRESSURE MUST NOT EXCEED 50 PSI AND IS PART OF THE BUILDING CONTRACT, NOT THE FOUNTAIN.
20. "P" TRAPS AND VENTS SHALL BE INSTALLED ON ANY DRAIN LINE CONNECTED TO A SANITARY SEWER SYSTEM, WHERE AND WHEN REQUIRED BY PLUMBING CODE, REGARDLESS OF WHETHER SHOWN ON INSTALLATION DRAWINGS.
21. SOIL COMPACTION AROUND SUBTERRANEAN PIPING TO BE COMPACTED IN 6" LIFTS.
22. ALL PIPING TO HAVE MINIMUM 2% SLOPE DOWN FROM FOUNTAIN TO EQUIPMENT ROOM UNLESS OTHERWISE SPECIFIED ON THE CONTRACT DOCUMENTS.
23. PRESSURE TESTING ON ALL PIPE RUNS BETWEEN THE PUMPING EQUIPMENT AND THE FOUNTAIN BASIN SHALL BE PERFORMED BY THE INSTALLING CONTRACTOR AFTER "ROUGH–INS" (PIPES INSTALLED AND STUBBED UP) ARE COMPLETE AND AGAIN BEFORE ANY CONCRETE IS POURED. IT IS RECOMMEND TO MAINTAIN ALL PIPING UNDER PRESSURE DURING THE CONSTRUCTION PHASE TO DETECT ANY DAMAGE EARLY ON. ALL TESTS SHALL USE WATER, NOT AIR FOR PRESSURE TESTING.
24. ALL PENETRATIONS THROUGH OUTSIDE WALLS TO BELOW GRADE SHALL BE SEALED PER BUILDING SPECIFICATIONS. USING "EASY–LINK SEALS" IS RECOMMENDED.
25. ALL PIPING PENETRATIONS THROUGH STRUCTURE WALLS INTO OPEN AREAS BELOW FOUNTAIN STRUCTURE MUST HAVE ALLOWANCES MADE FOR SETTLEMENT.
26. ANY AND ALL COSTS ASSOCIATED WITH ABOVE ARE RESPONSIBILITY OF INSTALLER.
27. ALL PIPING IS ASSUMED TO BE BURIED BELOW GROUND IN ALL CASES, AND NOT INSTALLED ON OR ABOVE GRADE WHERE AN AIR TRAP, LOOP, OR HIGHPOINT COULD BE CREATED.
28. CONTRACTOR SHALL OBTAIN ALL NECESSARY INSTALLATION PERMITS AND INSPECTIONS.
29. ALL WELDED PVC FITTINGS ABOVE 6" DIAMETER SHALL BE FIBERGLASS REINFORCED AND USED ONLY ON NON–PRESSURIZED LINES.

PVC INSTALLATION NOTES

1. UNLESS ARCHITECTS SPECIFICATIONS INDICATE OTHERWISE, THE SUGGESTED MINIMUM PIPING AND FITTING STANDARD RECOMMENDED FOR THIS INSTALLATION IS TYPE 1. PVC TYPE 1 CELL CLASSIFICATION 12454, CONFORMING TO ASTM STANDARD 1784.
2. USE ONLY PURPLE PVC PRIMER MEETING NSF, UPC, AND ASTM #F–656 STANDARDS FOR SOFTENING AND PREPARING FIELD PIPE AND FITTING SURFACES FOR SOLVENT CEMENTING (IPS CORPORATION "WELD–ON TYPE P–70 OR EQUIVALENT). WELD–ON P–70 PRIMER IS A PURPLE COLORED, NON–BODIED, VERY FAST ACTING, WATER THIN SOLVENT SYSTEM. WHEN USED IN CONJUNCTION WITH APPROPRIATE WELD–ON CEMENTS, WILL MAKE CONSISTENTLY STRONG, WELL–FUSED JOINTS. IT IS ESSENTIAL THAT THE JOINING SURFACES OF PIPE AND FITTINGS BE SOFTENED PRIOR TO ASSEMBLY. THE MAIN FUNCTION OF THIS PRIMER IS TO EXPEDITE THE PENETRATION AND SOFTENING OF THESE SURFACES. ITS RATE OF PENETRATION INTO THE JOINING SURFACES IS MUCH MORE RAPID THAN THAT OF CEMENT ALONE. IT IS SUITABLE FOR USE WITH ALL TYPES, SCHEDULES AND CLASSES OF PVC AND CPVC PIPE AND FITTINGS. FOLLOW ALL DIRECTIONS AND INSTRUCTIONS APPEARING ON PRODUCT LABEL.
3. USE ONLY GREY, HEAVY BODIED, MEDIUM SETTING PVC CEMENT MEETING NSF, UPC, AND ASTM #D–2564, STANDARDS FOR SOLVENT CEMENTING PVC PLASTIC PIPE AND FITTINGS (IPS CORPORATION "WELD–ON" TYPE 711 OR EQUIVALENT). WELD–ON 711 GREY, HEAVY BODIED, MEDIUM SET, HIGH STRENGTH SOLVENT CEMENT FOR CEMENTING ALL SCHEDULES AND CLASSES OF PVC PIPE AND FITTINGS THROUGH 12" INCLUDING SCHEDULE 80. WELD–ON 719 GREY OR WHITE, EXTRA HEAVY BODIED, THIXOTROPIC (PASTE–LIKE), HIGH STRENGTH SOLVENT CEMENT FOR CEMENTING ALL SCHEDULES AND CLASSES OF PVC PIPE AND FITTINGS 4" THROUGH 30" INCLUDING SCHEDULE 80. WELD–ON 711 AND 719 FOR USE ON ALL TYPES OF PVC PLASTIC PIPE APPLICATIONS, TYPE I AND TYPE II. IT IS APPROVED FOR USE WITH POTABLE WATER PRESSURE SYSTEMS, IRRIGATION, TURF IRRIGATION, GAS, CONDUIT, INDUSTRIAL PIPE APPLICATIONS, SEWER AND DRAIN, WASTE AND VENT SYSTEMS. FOLLOW ALL DIRECTIONS AND INSTRUCTIONS ON PRODUCT LABEL.
4. PRESSURE TEST ALL WATER PIPING PRIOR TO COMMENCING BACKFILL OPERATIONS. (SEE #4 IN "PRESSURE TESTING" SECTION ABOVE). HYDROSTATIC (WATER) TESTING SHALL BE THE ONLY APPROVED METHOD. DO NOT PRESSURE TEST WITH COMPRESSED AIR AS SEVERE PIPE DAMAGE AND BODILY INJURY CAN OCCUR. DO NOT EXCEED THE RATED OPERATIONAL PRESSURE OF THE PIPING AND/OR FITTINGS CARRYING THE LOWEST PRESSURE RATING. LOCATE AND REPAIR ANY LEAKS AND RETEST (PER #4 IN "PRESSURE TESTING" SECTION ABOVE) PRIOR TO COMPLETION OF BACKFILL OPERATIONS.
5. CONCRETE "THRUST" BLOCKING IS RECOMMENDED AT ALL DIRECTIONAL CHANGES (TEE'S, ELBOWS, ETC.), REDUCER FITTINGS AND LINE TERMINATIONS (BUSHINGS, END CAPS, PLUGS, ETC.) IN FOUNTAIN DISCHARGE PIPING 6" AND LARGER.
6. PERFORM ADEQUATE TRENCHING AND BACKFILL OPERATIONS WHEN INSTALLING PVC PIPING BELOW GRADE. TRENCH WIDTH SHOULD BE MINIMUM OF "PIPE O.D. PLUS 12 INCHES" AND DEEP ENOUGH TO ALLOW PIPING TO BE BURIED A MINIMUM OF 12" BELOW THE MAXIMUM EXPECTED FROST PENETRATION LINE TO AVOID FREEZE DAMAGE. LAY PIPING IN HORIZONTAL, PARALLEL, AND PERPENDICULAR MANNER. AVOID VERTICAL STACKING OF PIPES. SPACE MINIMUM OF 3" APART ON ALL PARALLEL RUNS.
7. USE ONLY CLEAN, FREE–FLOWING, NON–EXPANSIVE BACKFILL MATERIAL (NATURALLY ROUNDED ¼" PEA GRAVEL, 57 STONE, OR SAND) AND BACKFILL IN 6" LIFTS WITH ADEQUATE AND COMPLETE COMPACTION BETWEEN LIFTS TO 90% OF MAXIMUM DENSITY PER ASTM 1557–70. COMPACTION TO EXCESSIVE LOADS SHALL NOT BE PERMITTED. A SECOND PRESSURE TEST ON THE PIPING SYSTEM MUST BE MADE AT THIS TIME TO INSURE THAT PIPING HAS NOT BEEN DAMAGED DURING BACKFILL OPERATIONS (SEE #4 IN "PRESSURE TESTING" SECTION ABOVE).
8. AVOID LAYING SUCTION PIPING IN A MANNER THAT COULD RESULT IN A SUCTION LOOP BEFORE, DURING, OR AFTER BACKFILLING AND COMPACTION. ALWAYS PITCH PIPE IN A DOWNWARD DIRECTION TO AVOID A SUCTION LOOP THAT WILL CAUSE AIR TO BE PERMANENTLY TRAPPED, CAUSING LOSS IN PERFORMANCE OF THE PIPING SYSTEM DUE TO INCREASED FRICTION AND WORK LOAD DEMAND.
9. ANY AND ALL COSTS ASSOCIATED WITH ABOVE ARE RESPONSIBILITY OF INSTALLER.
10. INTERCONNECTING PIPING AND FITTINGS INSIDE EQUIPMENT ROOM IS SCHEDULE 80 P.V.C.

DELTA FOUNTAINS
ARCHITECTURAL & FLOATING FOUNTAINS
11494 COLUMBIA PARK DR. WEST SUITE #4
JACKSONVILLE, FL 32258
V. (904) 886–9030
F. (904) 886–9089
consulting design manufacturing

THIS DRAWING IS THE PROPERTY OF DELTA FOUNTAINS & MAY NOT BE USED WITHOUT WRITTEN PERMISSION FROM DELTA FOUNTAINS

NEW YORK CITY POLICE MEMORIAL
NEW YORK, NY

SHEET TITLE:
NOTES

DATE: 2015.08.26
DRAWN BY: JWT
CHECKED: DELTA

REVISIONS

PROJECT NUMBER: H2615
SHEET NUMBER: F4.00

C:\Users\JAMES\appdata\local\temp\AcPublish_11120\NYCPM–2015.08.25–50RCD.dwg Plotted: Aug 28, 2015 – 2:02pm by JAMES

Attachment A-2

Specifications

DRAFT – TECHNICAL SPECIFICATIONS

BATTERY PARK CITY AUTHORITY

KOWSKY PLAZA VAULTS

NORTH COVE

OWNER:
HUGH L. CAREY BATTERY PARK CITY AUTHORITY
ONE WORLD FINANCE CENTER, 24TH FLOOR
NEW YORK, NY 10281
T: 212.417.2000 F: 212.417.2001

ARCHITECT:
hanrahanMeyers architects
6 MAIDEN LANE, SUITE 510
NEW YORK, NY 10038
T: 212.989.6026 F: 212.917.9825

STRUCTURAL ENGINEERS:
THORNTON TOMASETTI
51 MADISON AVENUE
NEW YORK, NY 10010
T: 917.661.7800 F:917.7801

MEP ENGINEERS:
COSENTINI ASSOCIATES
TWO PENNSYLVANIA PLAZA
THIRD FLOOR
NEW YORK, NY 10121
T: 212.615.3760 F: 212.615.3600

SECTION 00 01 10 - TABLE OF CONTENTS

DOCUMENTS 00 - INTRODUCTORY, PROCUREMENT AND CONTRACTING REQUIREMENTS GROUP

INTRODUCTORY REQUIREMENTS
00 01 01 - PROJECT TITLE PAGE
00 01 10 - TABLE OF CONTENTS
00 01 15 - LIST OF DRAWING SHEETS

PROCUREMENT REQUIREMENTS - SEE RFP TABLE OF CONTENTS (ADDENDUM NO.1)

CONTRACTING REQUIREMENTS - SEE RFP TABLE OF CONTENTS (ADDENDUM NO. 1)

SPECIFICATIONS

DIVISION 01 -- GENERAL REQUIREMENTS
01 10 00 - SUMMARY
01 20 00 - PRICE AND PAYMENT PROCEDURES
01 22 00 - UNIT PRICES
01 23 00 - ALTERNATES
01 30 00 - ADMINISTRATIVE REQUIREMENTS
01 40 00 - QUALITY REQUIREMENTS
01 42 19 - REFERENCE STANDARDS
~~01 45 33 - CODE-REQUIRED SPECIAL INSPECTIONS~~ **(ADDENDUM No.1)**
01 50 00 - TEMPORARY FACILITIES AND CONTROLS
01 53 90 - TEMPORARY TREE PROTECTION
01 60 00 - PRODUCT REQUIREMENTS
01 70 00 - EXECUTION AND CLOSEOUT REQUIREMENTS
01 78 00 - CLOSEOUT SUBMITTALS

FACILITIES CONSTRUCTIION GROUP

DIVISION 02 -- EXISTING CONDITIONS
02 41 00 - SELECTIVE DEMOLITION

DIVISION 03 -- CONCRETE
03 10 00 - CONCRETE FORMWORK
03 20 00 - CONCRETE REINFORCMENT AND EMBEDDED ASSEMBLIES
03 30 00 - CAST-IN-PLACE CONCRETE

DIVISION 04 -- MASONRY (NOT USED)
04 05 11 - MASONRY MORTARING AND GROUTING
04 42 00 - EXTERIOR STONE CLADDING

DIVISION 05 -- METALS
05 12 00 - STRUCTURAL STEEL
05 52 13 - PIPE RAILINGS

DIVISION 06 -- WOOD, PLASTICS, AND COMPOSITES
06 10 00 - ROUGH CARPENTRY
06 15 16 - WOOD ROOF DECKING
06 18 00 - GLUED-LAMINATED CONSTRUCTION

DIVISION 07 -- THERMAL AND MOISTURE PROTECTION
07 13 00 - PRE-APPLIED AND SELF-ADHERING SHEET MEMBRANE WATERPROOFING
07 25 00 - WEATHER BARRIERS
07 41 13 - METAL ROOF PANELS
07 46 23 - WOOD SIDING
07 92 00 - JOINT SEALANTS

DIVISION 08 -- OPENINGS
08 11 13 - HOLLOW METAL DOORS AND FRAMES
08 43 13 - ALUMINUM-FRAMED STOREFRONTS – **Addendum No 1**
08 71 00 - DOOR HARDWARE
08 80 00 - GLAZING

DIVISION 09 -- FINISHES
09 90 00 - PAINTING AND COATING

DIVISION 10 -- SPECIALTIES (NOT USED)

DIVISION 11 -- EQUIPMENT (NOT USED)

DIVISION 12 -- FURNISHINGS (NOT USED)

DIVISION 13 -- SPECIAL CONSTRUCTION (NOT USED)

DIVISION 14 -- CONVEYING EQUIPMENT

FACILITIES SERVICES GROUP

DIVISION 21 -- FIRE SUPPRESSION (NOT USED)

DIVISION 22 -- PLUMBING - SEE PLUMBING DRAWINGS FOR SPECIFICATIONS

DIVISION 23 -- HEATING, VENTILATING, AND AIR-CONDITIONING (HVAC) - SEE HVAC DRAWINGS FOR SPECIFICATIONS

DIVISION 25 -- INTEGRATED AUTOMATION (NOT USED)

DIVISION 26 -- ELECTRICAL
26 05 00 - COMMON WORK RESULTS FOR ELECTRICAL
26 05 19 - LOW-VOLTAGE ELECTRICAL POWER CONDUCTORS AND CABLES
26 05 26 - GROUNDING AND BONDING FOR ELECTRICAL SYSTEMS
26 05 29 - HANGERS AND SUPPORTS FOR ELECTRICAL SYSTEMS
26 05 33 - RACEWAYS AND BOXES FOR ELECTRICAL SYSTEMS
~~26 05 43 - UNDERGROUND DUCTS AND RACEWAYS FOR ELECTRICAL SYSTEMS~~ **Addendum # 1**
26 05 44 - SLEEVES AND SLEEVE SEALS FOR ELECTRICAL RACEWAYS AND CABLING
~~26 05 46 - VIBRATION AND SEISMIC CONTROLS FOR ELECTRICAL SYSTEMS~~ **Addendum #1**
26 05 53 - IDENTIFICATION FOR ELECTRICAL SYSTEMS
~~26 05 54 - ELECTRICAL COMMISIONING REQUIREMENTS~~ **Addendum #1**
26 08 00 - ELECTRICAL TESTING
26 09 23 - LIGHTING CONTROL DEVICES
26 20 01 - FEEDERS AND BRANCH CIRCUITRY
26 22 00 - LOW-VOLTAGE TRANSFORMERS (INSTALLATION)
26 24 13 - SWITCHBOARDS
26 24 16 - PANELBOARDS
26 27 13 - ELECTRICITY METERING (UTILITY)
26 27 26 - WIRING DEVICES
26 28 13 - FUSES
26 28 16 - ENCLOSED SWITCHES AND CIRCUIT BREAKERS
26 51 00 - LIGHTING

DIVISION 27 -- COMMUNICATIONS (NOT USED)

DIVISION 28 -- ELECTRONIC SAFETY AND SECURITY (NOT USED)

SITE AND INFRASTRUCTURE GROUP

DIVISION 31 -- EARTHWORK
31 23 16 - EXCAVATION
31 23 23 - FILL

31 63 29 - CAISSONS

DIVISION 32 -- EXTERIOR IMPROVEMENTS
32 11 23 - AGGREGATE BASE COURSES
32 14 23 - ASPHALT UNIT PAVING
32 93 00 - PLANTS

END OF SECTION

SECTION 00 01 15 - LIST OF DRAWING SHEETS NUMBER TITLE ARCHITECTURAL

G-000.00 PROJECT INFORMATION
G-001.00 RENDERED VIEWS
A-000.00 SITE PLAN / PLOT PLAN
A-001.00 SITE PLAN
A-002.00 SITE PLAN EXISTING VAULT LEVEL
D-100.00 DEMOLITION, EXCAVATION AND PLANTING DETAIL
A 101.00 SITE PLAN
A-102.00 PROJECT PLAN
A-103.00 STRUCTURAL AND FOUNDATION PLANS
A-104.00 REFLECTED CEILING AND SITE LIGHTING PLAN
A-200.00 ELEVATIONS
A 301.00 SHORT SECTIONS
A-302.00 LONG SECTIONS
A-500.00 DETAILS
A-501.00 WINDOW ELEVATION DETAILS
A-600.00 INFRASTRUCTURE DIAGRAM

STRUCTURAL

SO-001.00 GENERAL NOTES
SO-002.00 GENERAL NOTES
SO-003.00 GENERAL NOTES
SO-004.00 GENERAL NOTES
SO-005.00 GENERAL WOOD NOTES
FO-1C1.00 STRUCTURAL PLANS
SO-300.00 LAP SPLICE SCHEDULES
S2-100.00 TYPICAL CAISSON DETAILS AND SCHEDULE
S2-105.00 TYPICAL SLAB ON GRADE DETAILS
S2-107.00 TYPICAL SITE RETAINING WALL DETAILS AND SCHEDULE
S2-110.00 TYPICAL GRADE BEAM DETAILS
S2-110.1 TYPICAL GRADE BEAM DETAILS
S2-111.00 GRADE BEAM SCHEDULES
S3-200.00 TYPICAL CONCRETE SHEARWALL DETAILS
S3-201.00 TYPICAL CONCRETE SHEARWALL DETAILS
S3-201.1 TYPICAL CONCRETE SHEARWALL DETAILS
S4-300.00 TYPICAL CONCRETE SHEARWALL DETAILS
S4-300.1 TYPICAL CONCRETE SLAB DETAILS
S-100.00 STRUCTURAL PLANS II
S-101.00 FULL ROOF PLAN
S-200.00 BUILDING SECTIONS
S-400.00 ROOF DETAILS

PLUMBING

P-001.00 PLUMBING SYMBOLS LIST, NOTES & SPECIFICATIONS
P-300.00 PLUMBING WORK IN CONNECTION WITH POLICE MEMORIAL PLAZA, PUMPS AND CONTROLLERS RELOCATION
P-301.00 PLUMBING WORK IN CONNECTION WITH POLICE MEMORIAL PLAZA, PUMPS AND CONTROLLERS RELOCATION

MECHANICAL

M-001.00 MECHANICAL DRAWING LIST,SYMBOL, NOTES & ABBREVIATIONS
M-102.00 MECHANICAL FLOOR PLANS

ELECTRICAL

E-001.00 ELECTRICAL SYMBOL LIST, NOTES AND ABBREVIATIONS
E-100.00 ELECTRICAL EXISTING ELECTRICAL SERVICES AND DISTRIBUTION EQUIP. SERVING POLICE PLAZA
E-200.00 ELECTRICAL MODIFICATION OF EXISTING ELECT. SERVICE AND DIST. EQUIPMENT SERVING POLICE PLAZA AND MARINE (FLOOD RESILIENCE)
E-300.00 ELECTRICAL ELECT. WORK IN CONNECTION W/ POLICE MEMORIAL PLAZA PUMPS AND CONTROLLERS RELOCATION
E-400.00 ELECTRICAL ELECT. WORK IN CONNECTION W/ POLICE MEMORIAL PLAZA PUMPS AND CONTROLLERS RELOCATION DETAILS
E-500.00 ELECTRICAL ELECT. WORK IN CONNECTION W/ POLICE MEMORIAL PLAZA PUMPS AND CONTROLLERS RELOCATION DETAILS
E-600.00 ELECTRICAL ONE LINE DIAGRAM FOR NEW UTILITIES WEST AND EAST STRUCTURES
E.700.00 ELECTRICAL NEW WEST AND EAST UTILITIES STRCTURE DETAIL

END OF LIST OF DRAWING SHEETS

SECTION 01 10 00 - SUMMARY

PART 1 GENERAL 1.01 PROJECT

A. Project Name: Kowsky Plaza Vaults - Battery Park City - North Cove

B. Owner's Name: Battery Park City Authority

C. Architect's Name: hanrahan meyer architects, LLP.

D. The Project consists of the construction of two above ground electric power vaults to be built over a single existing underground electric vault that became flooded by Hurricane Sandy. The vault structures are approximately 17 feet square, have ipe hardwood vertical siding and louvers forming a rain screen over cast-in-place concrete walls supporting heavy timber columns that support a glued laminated wood and heavy timber framed roof supporting a wood deck. The deck is covered with a batten seamed galvanized steel roof with a factory applied high-performance Kynar based color resin coating. Each vault space is accessed through hollow metal doors. Electrical equipment and distribution panels are mounted to water resistant panels on the interior sides of the concrete vault walls. The vaults are ventilated by interlocked supply and exhault fans behind louvers.

1.02 CONTRACT DESCRIPTION

A. Contract Type: A single prime contract based on a Stipulated Sum as described in Battery Park City Authority's Construction Agreement

1.03 DESCRIPTION OF ALTERATIONS WORK

A. Scope of demolition and removal work is shown on drawings and specified in Section 02 41 00.

B. Scope of alterations work is shown on drawings.

C. Plumbing: Alter existing system and add new construction, keeping existing in operation.

D. Electrical Power and Lighting: Alter existing system and add new construction, keeping existing in operation.

1.04 OWNER OCCUPANCY

A. Owner intends to occupy the Project upon Substantial Completion.

B. Owner intends to occupy a certain portion of the Project prior to the completion date for the conduct of normal operations.

C. Cooperate with Owner to minimize conflict and to facilitate Owner's operations.

D. Schedule the Work to accommodate Owner occupancy.

1.05 CONTRACTOR USE OF SITE AND PREMISES

A. Construction Operations: Limited to areas noted on Drawings. B.

Arrange use of site and premises to allow:

1. Work by Others.
2. Work by Owner.

C. Provide access to and from site as required by law and by Owner:

1. Emergency Building Exits During Construction: Keep all exits required by code open during construction period; provide temporary exit signs if exit routes are temporarily altered.
2. Do not obstruct roadways, sidewalks, or other public ways without permit. D.

Time Restrictions:

1. Limit conduct of especially noisy exterior work to the hours of 8:00 am to 5:00 pm.

E. Utility Outages and Shutdown:

1. Limit shutdown of utility services to 8 hours at a time, arranged at least 24 hours in advance with Owner.
2. Prevent accidental disruption of utility services to other facilities.

1.06 WORK SEQUENCE

A. Construct Work in phases during the construction period. Contractor shall propose for approval with work schedule, various phases to accomplish completed construction with minimum electrical power disruption.

B. Coordinate construction schedule and operations with Owner.

C. Coordinate construction schedule and operations with Architect and Electrical Engineer.

PART 2 PRODUCTS - NOT USED PART 3 EXECUTION - NOT USED

END OF SECTION

SECTION 01 20 00 - PRICE AND PAYMENT PROCEDURES

PART 1 GENERAL 1.01 SECTION INCLUDES

A. Procedures for preparation and submittal of applications for progress payments.

B. Documentation of changes in Contract Sum and Contract Time.

C. Change procedures.

D. Correlation of Contractor submittals based on changes.

E. Procedures for preparation and submittal of application for final payment.

1.02 RELATED REQUIREMENTS

A. Document 00 52 00 - Agreement Form: Contract Sum, retainages, payment period, monetary values of unit prices.

B. Document 00 72 00 - General Conditions and Document 00 73 00 - Supplementary Conditions: Additional requirements for progress payments, final payment, changes in the Work.

C. Document 00 73 00 - Supplementary Conditions: Percentage allowances for Contractor's overhead and profit.

D. Section 01 22 00 - Unit Prices: Monetary values of unit prices, payment and modification procedures relating to unit prices.

1.03 SCHEDULE OF VALUES

A. Electronic media printout including equivalent information will be considered in lieu of standard form specified; submit draft to Architect for approval. B. Forms filled out by hand will not be accepted.

C. Submit a printed schedule on AIA Form G703 - Application and Certificate for Payment Continuation Sheet. Contractor's standard form or electronic media printout will be considered

D. Submit Schedule of Values in duplicate within 15 days after date of Owner-Contractor Agreement.

E. Format: Utilize the Table of Contents of this Project Manual. Identify each line item with number and title of the specification Section. Identify site mobilization and bonds and insurance.

F. Include in each line item, the amount of Allowances specified in this section. For unit cost Allowances, identify quantities taken from Contract Documents multiplied by the unit cost to achieve the total for the item.

G. Include separately from each line item, a direct proportional amount of Contractor's overhead and profit.

H. Revise schedule to list approved Change Orders, with each Application For Payment.

1.04 APPLICATIONS FOR PROGRESS PAYMENTS

A. Payment Period: Submit at intervals stipulated in the Agreement.

B. Electronic media printout including equivalent information will be considered in lieu of standard form specified; submit sample to Architect for approval. C. Forms filled out by hand will not be accepted.

D. Form: AIA G702 Application and Certificate for Payment and AIA G703 - Continuation Sheet including continuation sheets when required.

E. For each item, provide a column for listing each of the following:
   1. Item Number.
   2. Description of work.
   3. Scheduled Values.
   4. Previous Applications.
   5. Work in Place and Stored Materials under this Application.

6. Authorized Change Orders.
7. Total Completed and Stored to Date of Application.
8. Percentage of Completion.
9. Balance to Finish.
10. Retainage.

F. Execute certification by signature of authorized officer.

G. Use data from approved Schedule of Values. Provide dollar value in each column for each line item for portion of work performed and for stored products.

H. List each authorized Change Order as a separate line item, listing Change Order number and dollar amount as for an original item of Work.

I. Submit three copies of each Application for Payment. J. Include the following with the application:

1. Transmittal letter as specified for Submittals in Section 01 30 00.
2. Construction progress schedule, revised and current as specified in Section 01 30 00.
3. Current construction photographs specified in Section 01 30 00.
4. Partial release of liens from major Subcontractors and vendors.
5. Project record documents as specified in Section 01 78 00, for review by Owner which will be returned to the Contractor.
6. Affidavits attesting to off-site stored products.

K. When Architect requires substantiating information, submit data justifying dollar amounts in question. Provide one copy of data with cover letter for each copy of submittal. Show application number and date, and line item by number and description.

1.05 MODIFICATION PROCEDURES

A. Submit name of the individual authorized to receive change documents and who will be responsible for informing others in Contractor's employ or subcontractors of changes to the Contract Documents.

B. For minor changes not involving an adjustment to the Contract Sum or Contract Time, Architect will issue instructions directly to Contractor.

C. Alexander Gorlin Architect, LLC will advise of minor changes in the Work not involving an adjustment to Contract Sum or Contract Time as authorized by the Conditions of the Contract by issuing supplemental instructions on AIA Form G710.

D. For other required changes, Architect will issue a document signed by Owner instructing Contractor to proceed with the change, for subsequent inclusion in a Change Order.
1. The document will describe the required changes and will designate method of determining any change in Contract Sum or Contract Time.
2. Promptly execute the change.

E. For changes for which advance pricing is desired, Architect will issue a document that includes a detailed description of a proposed change with supplementary or revised drawings and specifications, a change in Contract Time for executing the change with a stipulation of any overtime work required and the period of time during which the requested price will be considered valid. Contractor shall prepare and submit a fixed price quotation within five days.

F. Contractor may propose a change by submitting a request for change to Architect, describing the proposed change and its full effect on the Work, with a statement describing the reason for the change, and the effect on the Contract Sum and Contract Time with full documentation and a statement describing the effect on Work by separate or other contractors. Document any requested substitutions in accordance with Section 01 60 00.

G. Computation of Change in Contract Amount: As specified in the Agreement and Conditions of the Contract.

For change requested by Architect for work falling under a fixed price contract, the amount will be based on Contractor's price quotation.

1.

2. For change requested by Contractor, the amount will be based on the Contractor's request for a Change Order as approved by Architect.
3. For pre-determined unit prices and quantities, the amount will based on the fixed unit prices.
4. For change ordered by Architect without a quotation from Contractor, the amount will be determined by Architect based on the Contractor's substantiation of costs as specified for Time and Material work.

H. Substantiation of Costs: Provide full information required for evaluation.
   1. On request, provide the following data:
      a. Quantities of products, labor, and equipment.
      b. Taxes, insurance, and bonds.
      c. Overhead and profit.
      d. Justification for any change in Contract Time.
      e. Credit for deletions from Contract, similarly documented.
   2. Support each claim for additional costs with additional information:
      a. Origin and date of claim.
      b. Dates and times work was performed, and by whom.
      c. Time records and wage rates paid.
      d. Invoices and receipts for products, equipment, and subcontracts, similarly documented.
   3. For Time and Material work, submit itemized account and supporting data after completion of change, within time limits indicated in the Conditions of the Contract.

I. Execution of Change Orders: Architect will issue Change Orders for signatures of parties as provided in the Conditions of the Contract.

J. After execution of Change Order, promptly revise Schedule of Values and Application for Payment forms to record each authorized Change Order as a separate line item and adjust the Contract Sum.

K. Promptly revise progress schedules to reflect any change in Contract Time, revise sub-schedules to adjust times for other items of work affected by the change, and resubmit. L. Promptly enter changes in Project Record Documents.

1.06 APPLICATION FOR FINAL PAYMENT

A. Prepare Application for Final Payment as specified for progress payments, identifying total adjusted Contract Sum, previous payments, and sum remaining due.

B. Application for Final Payment will not be considered until the following have been accomplished:
   1. All closeout procedures specified in Section 01 70 00.

PART 2 PRODUCTS - NOT USED PART 3 EXECUTION - NOT USED

END OF SECTION

SECTION 01 22 00 - UNIT PRICES

PART 1 GENERAL

1.01 SECTION INCLUDES

A. List of unit prices, for use in preparing Bids.

B. Measurement and payment criteria applicable to Work performed under a unit price payment method.

C. Defect assessment and non-payment for rejected work.

1.02 RELATED REQUIREMENTS

A. Document 00 21 13 - Instructions to Bidders: Instructions for preparation of pricing for Unit Prices.

B. Document 00 43 22 - Unit Prices Form: List of Unit Prices as supplement to Bid Form

C. Section 01 20 00 - Price and Payment Procedures: Additional payment and modification procedures.

1.03 COSTS INCLUDED

A. Unit Prices included on the Bid Form shall include full compensation for all required labor, products, tools, equipment, plant, transportation, services and incidentals; erection, application or installation of an item of the Work; overhead and profit.

1.04 UNIT QUANTITIES SPECIFIED

A. Quantities indicated in the Bid Form are for bidding and contract purposes only. Quantities and measurements of actual Work will determine the payment amount.

1.05 MEASUREMENT OF QUANTITIES

A. Measurement methods delineated in the individual specification sections complement the criteria of this section. In the event of conflict, the requirements of the individual specification section govern.

B. Take all measurements and compute quantities. Measurements and quantities will be verified by Owner.

C. Assist by providing necessary equipment, workers, and survey personnel as required.

D. Measurement Devices:
   1. Weigh Scales: Inspected, tested and certified by the applicable state Weights and Measures department within the past year.
   2. Platform Scales: Of sufficient size and capacity to accommodate the conveying vehicle.
   3. Metering Devices: Inspected, tested and certified by the applicable state department within the past year.

E. Measurement by Weight: Concrete reinforcing steel, rolled or formed steel or other metal shapes will be measured by handbook weights. Welded assemblies will be measured by handbook or scale weight.

F. Measurement by Volume: Measured by cubic dimension using mean length, width and height or thickness.

G. Measurement by Area: Measured by square dimension using mean length and width or radius.

H. Linear Measurement: Measured by linear dimension, at the item centerline or mean chord.

I. Stipulated Price Measurement: Items measured by weight, volume, area, or linear means or combination, as appropriate, as a completed item or unit of the Work.

J. Perform surveys required to determine quantities, including control surveys to establish measurement reference lines. Notify Architect prior to starting work.

K. Contractor's Engineer Responsibilities: Sign surveyor's field notes or keep duplicate field notes, calculate and certify quantities for payment purposes.

1.06 PAYMENT

A. Payment for Work governed by unit prices will be made on the basis of the actual measurements and quantities of Work that is incorporated in or made necessary by the Work and accepted by the Architect, multiplied by the unit price.

B. Payment will not be made for any of the following:
   1. Products wasted or disposed of in a manner that is not acceptable.
   2. Products determined as unacceptable before or after placement.
   3. Products not completely unloaded from the transporting vehicle.
   4. Products placed beyond the lines and levels of the required Work.
   5. Products remaining on hand after completion of the Work.
   6. Loading, hauling, and disposing of rejected Products.

1.07 DEFECT ASSESSMENT

A. Replace Work, or portions of the Work, not conforming to specified requirements.

B. If, in the opinion of Architect, it is not practical to remove and replace the Work, Architect will direct one of the following remedies:
   1. The defective Work may remain, but the unit price will be adjusted to a new unit price at the discretion of Architect.
   2. The defective Work will be partially repaired to the instructions of the Architect, and the unit price will be adjusted to a new unit price at the discretion of Architect.

C. If, in the opinion of Owner, it is not practical to remove and replace the Work, Owner will direct one of the following remedies:
   1. The defective Work may remain, but the unit price will be adjusted to a new unit price at the discretion of Owner.
   2. The defective Work will be partially repaired to the instructions of the Owner, and the unit price will be adjusted to a new unit price at the discretion of Owner.

D. The individual specification sections may modify these options or may identify a specific formula or percentage price reduction.

E. The authority of Architect to assess the defect and identify payment adjustment is final.

F. The authority of Owner to assess the defect and identify payment adjustment is final.

1.08 SCHEDULE OF UNIT PRICES

A. Item 1: Excavation and Backfill with excavated material and or removal from the site as required, open; Section 31 23 16 - Excavation, Filling and Grading.

B. Item 2: Excavation and Backfill with excavated material and or removal from the site as required, trench; Section 31 23 16 - Excavation, Filling and Grading.

C. Item 5: General fill in-place, compacted; Section 31 23 16 - Excavation, Filling and Grading.

D. Item 6: Structural fill in-place, compacted; Section 31 23 16 - Excavation, Filling and Grading.

E. Item 7: Granular gravel fill in-place; Section 31 23 16 - Excavation, Filling and Grading.

F. Item 8: Granular pea gravel fill in-place; Section 31 23 16 - Excavation, Filling and Grading.

G. Item 9: Sand fill in-place; Section 31 23 16 - Excavation, Filling and Grading.

H. Item 10: Foundation concrete in-place; Section 03 30 00 - Cast-in-Place Concrete.

I. Item 11: Foundation reinforcing steel in-place; Section 03 30 00 - Cast-in-Place Concrete.

J. Item 12: Foundation forms in-place and stripped: Section 03 30 00 - Cast-in-Place Concrete.

PART 2 PRODUCTS - NOT USED

PART 3 EXECUTION - NOT USED

END OF SECTION

SECTION 01 23 00 - ALTERNATES

PART 1 GENERAL

1.01 SECTION INCLUDES

A. Description of Alternates.

B. Procedures for pricing Alternates.

C. Documentation of changes to Contract Sum and Contract Time.

1.02 RELATED REQUIREMENTS

A. Document 00 21 13 - Instructions to Bidders: Instructions for preparation of pricing for Alternates.

B. Document 00 43 23 - Alternates Form: List of Alternates as supplement to Bid Form.

C. Document 00 52 00 - Agreement Form: Incorporating monetary value of accepted Alternates.

1.03 ACCEPTANCE OF ALTERNATES

A. Alternates quoted on Bid Forms will be reviewed and accepted or rejected at Owner's option. Accepted Alternates will be identified in the Owner-Contractor Agreement.

B. Coordinate related work and modify surrounding work to integrate the Work of each Alternate.

1.04 SCHEDULE OF ALTERNATES A.

PART 2 PRODUCTS - NOT USED

PART 3 EXECUTION - NOT USED

END OF SECTION

SECTION 01 30 00 - ADMINISTRATIVE REQUIREMENTS

PART 1 GENERAL 1.01 SECTION INCLUDES

A. Preconstruction meeting.
B. Site mobilization meeting.
C. Progress meetings.
D. Construction progress schedule.
E. Progress photographs.
F. Coordination drawings.
G. Submittals for review, information, and project closeout.
H. Number of copies of submittals.
I. Submittal procedures.

1.02 RELATED REQUIREMENTS

A. Document 00 72 00 - General Conditions: Dates for applications for payment.
B. Section 01 70 00 - Execution and Closeout Requirements: Additional coordination requirements.
C. Section 01 78 00 - Closeout Submittals: Project record documents.

1.03 PROJECT COORDINATION

A. Project Coordinator: The General Contractor.
B. Cooperate with the Project Coordinator in allocation of mobilization areas of site; for field offices and sheds, for site access, traffic, and parking facilities.
C. Provide level and compacted areas of site for crane and panelized construction staging. Insure that soil bearing capacity is sufficient to support crane, delivery vehicles and modular units. D. During construction, coordinate use of site and facilities through the Project Coordinator.
E. Comply with Project Coordinator's procedures for intra-project communications; submittals, reports and records, schedules, coordination drawings, and recommendations; and resolution of ambiguities and conflicts.
F. Comply with instructions of the Project Coordinator for use of temporary utilities and construction facilities.
G. Coordinate field engineering and layout work under instructions of the Project Coordinator. H.

Make the following types of submittals to Architect through the Project Coordinator:

1. Requests for interpretation.
2. Requests for substitution.
3. Shop drawings, product data, and samples.
4. Test and inspection reports.
5. Design data.
6. Manufacturer's instructions and field reports.
7. Applications for payment and change order requests.
8. Progress schedules.
9. Coordination drawings.
10. Correction Punch List and Final Correction Punch List for Substantial Completion.
11. Closeout submittals.

PART 3 EXECUTION 3.01 PRECONSTRUCTION MEETING

A. Owner will schedule a meeting after Notice of

Award. B. Attendance Required:

1. Owner.
2. Architect.
3. Contractor. C. Agenda:

1. Execution of Owner- Contractor Agreement.
2. Submission of executed bonds and insurance certificates.
3. Distribution of Contract Documents.
4. Submission of list of Subcontractors, list of Products, schedule of values, and progress schedule.
5. Designation of personnel representing the parties to Contract, Consulting Engineers and Architect.
6. Procedures and processing of field decisions, submittals, substitutions, applications for payments, proposal request, Change Orders, and Contract closeout procedures.
7. Scheduling.

D. The Owner will record minutes and distribute copies to the Contractor and those affected by decisions made.

3.02 SITE MOBILIZATION MEETING

A. Architect will schedule a meeting at the Project site prior to Contractor

occupancy. B. Attendance Required:

1. Owner's Representative.
2. Architect.
3. Special Consultants.
4. Contractor
5. Contractor's Superintendent. C. Agenda:

1. Use of premises by Owner and Contractor.
2. Owner's requirements and occupancy prior to completion.
3. Construction facilities and controls provided by Owner.
4. Temporary utilities provided by Owner.
5. Certified survey and building layout.
6. Security and housekeeping procedures.
7. Schedules.
8. Application for payment procedures.
9. Procedures for testing.
10. Procedures for maintaining record documents.
11. Requirements for start-up of equipment.
12. Inspection and acceptance of equipment put into service during construction period.

D. The Owner will record minutes and distribute copies to the Contractor and those affected by decisions made.

3.03 PROGRESS MEETINGS

A. The Owner will schedule and administer meetings throughout progress of the Work at maximum monthly intervals.

B. Architect will make arrangements for meetings, prepare agenda with copies for participants, preside at meetings.

C. Attendance Required: Job superintendent, major Subcontractors and suppliers, Owner's Representative, Architect, as appropriate to agenda topics for each meeting. D. Agenda:

1. Review minutes of previous meetings.
2. Review of Work progress.
3. Field observations, problems, and decisions.

4. Identification of problems that impede, or will impede, planned progress.
5. Review of submittals schedule and status of submittals.
6. Review of off-site fabrication and delivery schedules.
7. Maintenance of progress schedule.
8. Corrective measures to regain projected schedules.
9. Planned progress during succeeding work period.
10. Maintenance of quality and work standards.
11. Effect of proposed changes on progress schedule and coordination.
12. Other business relating to Work.

E. The Owner will record minutes and distribute copies within four days after meeting to participants, with copies to Owner, Architect and Contractor, and those affected by decisions made.

3.04 CONSTRUCTION PROGRESS SCHEDULE

A. Within 10 days after date of the Agreement, submit preliminary schedule defining planned operations for the first 60 days of Work, with a general outline for remainder of Work.

B. If preliminary schedule requires revision after review, submit revised schedule within 10 days. C. Within 20 days after review of preliminary schedule, submit draft of proposed complete schedule for review.

1. Include written certification that major Subcontractors have reviewed and accepted proposed schedule.

D. Within 10 days after joint review, submit complete schedule.

E. Submit updated schedule with each Application for Payment.

3.05 COORDINATION DRAWINGS

A. Provide information required by Project Coordinator for preparation of coordination drawings.

B. Review drawings prior to submission to Architect.

3.06 SUBMITTALS FOR REVIEW

A. When the following are specified in individual sections, submit them for review:
1. Product data.
2. Shop drawings.
3. Samples for selection.
4. Samples for verification.

B. Submit PDF by email to Architect for review for the limited purpose of checking for conformance with information given and the design concept expressed in the contract documents. C. Samples will be reviewed only for aesthetic, color, or finish selection.

D. After review, provide copies and distribute in accordance with SUBMITTAL PROCEDURES article below and for record documents purposes described in Section 01 78 00 - Closeout Submittals.

3.07 SUBMITTALS FOR INFORMATION

A. When the following are specified in individual sections, submit them for information:
1. Design data.
2. Certificates.
3. Test reports.
4. Inspection reports.
5. Manufacturer's instructions.
6. Manufacturer's field reports.
7. Other types indicated.

B. Submit for Architect's knowledge as contract administrator or for Owner. No action will be taken.

3.08 SUBMITTALS FOR PROJECT CLOSEOUT

A. Submit Correction Punch List for Substantial Completion.

B. Submit Final Correction Punch List for Substantial Completion.

C. When the following are specified in individual sections, submit them at project closeout:
   1. Project record documents.
   2. Operation and maintenance data.
   3. Warranties.
   4. Bonds.
   5. Other types as indicated.

D. Submit for Owner's benefit during and after project completion.

3.09 NUMBER OF COPIES OF SUBMITTALS A. Documents for Review:

1. Small Size Sheets, Not Larger Than 8-1/2 x 11 inches: Submit the number of copies that Contractor requires, plus two copies that will be retained by Architect.
2. Larger Sheets, Not Larger Than 36 x 48 inches: Submit one reproducible transparency and one opaque reproduction.

B. Documents for Information: Submit two copies.

C. Samples: Submit the number specified in individual specification sections; one of which will be retained by Architect.
   1. After review, produce duplicates.
   2. Retained samples will not be returned to Contractor unless specifically so stated.

3.10 SUBMITTAL PROCEDURES

A. Shop Drawing Procedures:
   1. Prepare accurate, drawn-to-scale, original shop drawing documentation by interpreting the Contract Documents and coordinating related Work.
   2. Generic, non-project specific information submitted as shop drawings do not meet the requirements for shop drawings.

B. Transmit each submittal with a copy of approved submittal form.

C. Transmit each submittal in PDF format by email with approved form. Each submittal shall be accompanied by an approved transmittal form to be reviewed.

D. Sequentially number the transmittal form. Revise submittals with original number and a sequential alphabetic suffix.

E. Identify Project, Contractor, Subcontractor or supplier; pertinent drawing and detail number, and specification section number, as appropriate on each copy.

F. Apply Contractor's stamp, signed or initialed certifying that review, approval, verification of Products required, field dimensions, adjacent construction Work, and coordination of information is in accordance with the requirements of the Work and Contract Documents. G. Email submittals in PDF format to Architect at business address.

H. Schedule submittals to expedite the Project, and coordinate submission of related items.

I. For each submittal for review, allow 15 days excluding delivery time to and from the Contractor.

J. Identify variations from Contract Documents and Product or system limitations that may be detrimental to successful performance of the completed Work. K. Provide space for Contractor and Architect review stamps.

L. Alexander Gorlin Architect, LLC will return submittals in PDF format by email with combined Architect, Engineer and/or Consultant mark-ups, approval status stamps and signatures.

M. Materials samples shall be submitted in required quantity by delivery, USPS or shipping carrier.

N. When revised for resubmission, identify all changes made since previous submission.

O. Distribute reviewed submittals as appropriate. Instruct parties to promptly report any inability to comply with requirements.

P. Submittals not requested will not be recognized or processed.

END OF SECTION

SECTION 01 40 00 - QUALITY REQUIREMENTS

PART 1 GENERAL

1.01 SECTION INCLUDES

A. Quality assurance submittals.

B. Mock-ups.

C. Control of installation.

D. Tolerances.

E. Inspection services.

F. Building Code of The City New York.

G. Manufacturers' field services.

1.02 RELATED REQUIREMENTS

A. Document 00 31 00 - Available Project Information: Soil investigation data.

B. Document 00 72 00 - General Conditions: Inspections and approvals required by public authorities.

C. Section 01 30 00 - Administrative Requirements: Submittal procedures.

D. Section 01 42 19 - Reference Standards.

E. Section 01 60 00 - Product Requirements: Requirements for material and product quality.

1.03 REFERENCE STANDARDS

A. ASTM C1021 - Standard Practice for Laboratories Engaged in Testing of Building Sealants; 2008 (Reapproved 2014).

B. ASTM C1077 - Standard Practice for Laboratories Testing Concrete and Concrete Aggregates for Use in Construction and Criteria for Laboratory Evaluation; 2014.

C. ASTM C1093 - Standard Practice for Accreditation of Testing Agencies for Masonry; 2013.

D. ASTM D3740 - Standard Practice for Minimum Requirements for Agencies Engaged in the Testing and/or Inspection of Soil and Rock as Used in Engineering Design and Construction; 2012a.

E. ASTM E329 - Standard Specification for Agencies Engaged in Construction Inspection, Testing, or Special Inspection; 2014a.

F. ASTM E543 - Standard Specification for Agencies Performing Nondestructive Testing; 2013.

G. ASTM E 548 - Standard Guide for General Criteria used for Evaluating Laboratory Competance.

1.04 SUBMITTALS

A. Design Data: Submit for Architect's knowledge as contract administrator for the limited purpose of assessing conformance with information given and the design concept expressed in the contract documents, or for Owner's information.

B. Test Reports: After each test/inspection, promptly submit two copies of report to Architect and to Contractor.
   1. Include:
      a. Date issued.
      b. Project title and number.
      c. Name of inspector.
      d. Date and time of sampling or inspection.
      e. Identification of product and specifications section.
      f. Location in the Project.
      g. Type of test/inspection.
      h. Date of test/inspection.

i. Results of test/inspection.
j. Conformance with Contract Documents.
k. When requested by Architect, provide interpretation of results.

2. Test report submittals are for Architect's knowledge as contract administrator for the limited purpose of assessing conformance with information given and the design concept expressed in the contract documents, or for Owner's information.

C. Certificates: When specified in individual specification sections, submit certification by the manufacturer and Contractor or installation/application subcontractor to Architect, in quantities specified for Product Data.
1. Indicate material or product conforms to or exceeds specified requirements. Submit supporting reference data, affidavits, and certifications as appropriate.
2. Certificates may be recent or previous test results on material or product, but must be acceptable to Architect.

D. Manufacturer's Instructions: When specified in individual specification sections, submit printed instructions for delivery, storage, assembly, installation, start-up, adjusting, and finishing, for the Owner's information. Indicate special procedures, perimeter conditions requiring special attention, and special environmental criteria required for application or installation.

E. Manufacturer's Field Reports: Submit reports for Architect's benefit as contract administrator or for Owner.
1. Submit report in duplicate within 30 days of observation to Architect for information.
2. Submit for information for the limited purpose of assessing conformance with information given and the design concept expressed in the contract documents.

F. Erection Drawings: Submit drawings for Architect's benefit as contract administrator or for Owner.
1. Submit for information for the limited purpose of assessing conformance with information given and the design concept expressed in the contract documents.

1.05 REFERENCES AND STANDARDS - SEE SECTION 01 42 19

A. For products and workmanship specified by reference to a document or documents not included in the Project Manual, also referred to as reference standards, comply with requirements of the standard, except when more rigid requirements are specified or are required by applicable codes.

B. Conform to reference standard of date of issue current on date of Contract Documents, except where a specific date is established by applicable code.

C. Obtain copies of standards where required by product specification sections.

D. Maintain copy at project site during submittals, planning, and progress of the specific work, until Substantial Completion.

E. Should specified reference standards conflict with Contract Documents, request clarification from Architect before proceeding.

F. Neither the contractual relationships, duties, or responsibilities of the parties in Contract nor those of Architect shall be altered from the Contract Documents by mention or inference otherwise in any reference document.

1.06 TESTING AND INSPECTION AGENCIES

A. The Owner shall employ services of an independent testing agency to perform all Special Inspections and Progress Inspections required by the New York City Department of Buildings. The Contractor shall provide tests, materials and labor required to complete these inspections. The Professional Engineer or Registered Architect who furnishes the services to the Contractor shall be approved by the Owner and the Architect of Record. Payment for cost of services will be derived from the allowance specified in Section 01 21 00; see Section 01 21 00 and applicable sections for description of services included in allowance.

B. As indicated in individual specification sections, Owner or Contractor shall employ and pay for services of an independent testing agency to perform other specified testing.

C. Employment of agency in no way relieves Contractor of obligation to perform Work in accordance with requirements of Contract Documents.

D. Contractor Employed Agency:
   1. Testing agency: Comply with requirements of ASTM E329, ASTM E543, ASTM C1021, ASTM C1077, and ASTM C1093.
   2. Inspection agency: Comply with requirements of ASTM D3740 and ASTM E329.
   3. Laboratory: Authorized to operate in New York State.
   4. Laboratory Staff: Maintain a full time registered Engineer on staff to review services.
   5. Testing Equipment: Calibrated at reasonable intervals either by NIST or using an NIST established Measurement Assurance Program, under a laboratory measurement quality assurance program.

PART 2 PRODUCTS - NOT USED

PART 3 EXECUTION

3.01 CONTROL OF INSTALLATION

A. Monitor quality control over suppliers, manufacturers, products, services, site conditions, and workmanship, to produce Work of specified quality.

B. Comply with manufacturers' instructions, including each step in sequence.

C. Should manufacturers' instructions conflict with Contract Documents, request clarification from Architect before proceeding.

D. Comply with specified standards as minimum quality for the Work except where more stringent tolerances, codes, or specified requirements indicate higher standards or more precise workmanship.

E. Have Work performed by persons qualified to produce required and specified quality.

F. Verify that field measurements are as indicated on shop drawings or as instructed by the manufacturer.

G. Secure products in place with positive anchorage devices designed and sized to withstand stresses, vibration, physical distortion, and disfigurement.

3.02 MOCK-UPS

A. Before installing portions of the Work where mockups are required, construct mockups in location and size indicated for each form of construction and finish required to comply with the following requirements, using materials indicated for the completed Work. The purpose of mock-up is to demonstrate the proposed range of aesthetic effects and workmanship.

B. Accepted mock-ups establish the standard of quality the Architect will use to judge the Work.

C. Integrated Exterior Mockups: construct integrated exterior mockup as indicated on Drawings. Coordinate installation of exterior envelope materials and products as required in individual Specification Sections. Provide adequate supporting structure for mockup materials as necessary.

D. Tests shall be performed under provisions identified in this section and identified in the respective product specification sections.

E. Assemble and erect specified items with specified attachment and anchorage devices, flashings, seals, and finishes.

F. Obtain Architect's approval of mockups before starting work, fabrication, or construction.
   1. Architect will issue written comments within seven (7) working days of initial review and each subsequent follow up review of each mockup.
   2. Make corrections as necessary until Architect's approval is issued.

G. Accepted mock-ups shall be a comparison standard for the remaining Work.

H. Where mock-up has been accepted by Architect and is specified in product specification sections to be removed, protect mock-up throughout construction, remove mock-up and clear area when directed to do so by Architect.

I. Where possible salvage and recycle the demolished mock-up materials.

3.03 TOLERANCES

A. Monitor fabrication and installation tolerance control of products to produce acceptable Work. Do not permit tolerances to accumulate.

B. Comply with manufacturers' tolerances. Should manufacturers' tolerances conflict with Contract Documents, request clarification from Architect before proceeding.

C. Adjust products to appropriate dimensions; position before securing products in place.

3.04 TESTING AND INSPECTION

A. See individual specification sections for testing required.

B. See individual inspections and tests checked and initialed by designated Architect or Professional Engineer on NYC/DoB Form TR-1 Technical Report: Statement of Responsibility, filed with NYC/DoB, for testing and inspection requirements. Each prime Contractor shall be responsible for inspections and tests for their respective Work.

C. Testing Agency Duties:
   1. Test samples of mixes submitted by Contractor.
   2. Provide qualified personnel at site. Cooperate with Architect and Contractor in performance of services.
   3. Perform specified sampling and testing of products in accordance with specified standards.
   4. Ascertain compliance of materials and mixes with requirements of Contract Documents.
   5. Promptly notify Architect and Contractor of observed irregularities or non-conformance of Work or products.
   6. Perform additional tests and inspections required by Architect.
   7. Submit reports of all tests/inspections specified.

D. Limits on Testing/Inspection Agency Authority:
   1. Agency may not release, revoke, alter, or enlarge on requirements of Contract Documents.
   2. Agency may not approve or accept any portion of the Work.
   3. Agency may not assume any duties of Contractor.
   4. Agency has no authority to stop the Work.

E. Contractor Responsibilities:
   1. Deliver to agency at designated location, adequate samples of materials proposed to be used that require testing, along with proposed mix designs.
   2. Cooperate with laboratory personnel, and provide access to the Work and to manufacturers' facilities.
   3. Provide incidental labor and facilities:
      a. To provide access to Work to be tested/inspected.
      b. To obtain and handle samples at the site or at source of Products to be tested/inspected.
      c. To facilitate tests/inspections.
      d. To provide storage and curing of test samples.
   4. Notify Architect and laboratory 24 hours prior to expected time for operations requiring testing/inspection services.
   5. Employ services of an independent qualified testing laboratory and pay for additional samples, tests, and inspections required by Contractor beyond specified requirements.
   6. Arrange with Owner's agency and pay for additional samples, tests, and inspections required by Contractor beyond specified requirements.

F. Re-testing required because of non-conformance to specified requirements shall be performed by the same agency on instructions by Architect.

G. Re-testing required because of non-conformance to specified requirements shall be paid for by Contractor.

H. Re-testing required because of non-conformance to specified requirements shall be performed by the same agency on instructions by Alexander Gorlin Architect. Payment for re testing will be charged to the Contractor by deducting testing charges from the Contract Price.

3.05 SPECIAL INSPECTIONS AND PROGRESS INSPECTIONS

A. Inspections and tests shall be checked and initialed by designated Architect or Professional Engineer on the Southhampton Division of Buildings and Zoning Form and filed with The Southampton Division of Building and Zoning, for testing and inspection requirements.

B. Special Inspections shall include but not be limited to:
   1. Fire Alarm Test
   2. Masonry
   3. Soils, By Owner
   4. Underpinning
   5. Mechanical Systems
   6. Structural Safety - Structural Stability
   7. Excavation - Sheeting, Shoring and Bracing
   8. Sprinkler Systems
   9. Standpipe Systems
   10. Heating Systems
   11. Firestop, Draftstop and Fireblock systems
   12. Concrete including Cast-in-Place, Test Cylinders and Desidn Mix - See Section 03 30 00 Concrete for Owner's responsibility for testting.

C. Progress Inspections:
   1. Preliminary
   2. Footing and Foundation
   3. Energy Code Compliance
   4. Fire Resistance Rated Construction

D. Equipment Use Permit for air conditioning systems. The Contractor shall pay all costs associated with these filings.

3.06 MANUFACTURERS' FIELD SERVICES

A. When specified in individual specification sections, require material or product suppliers or manufacturers to provide qualified staff personnel to observe site conditions, conditions of surfaces and installation, quality of workmanship, start-up of equipment, test, adjust and balance of equipment as applicable, and to initiate instructions when necessary.

B. Submit qualifications of observer to Architect 30 days in advance of required observations.
   1. Observer subject to approval of Architect.
   2. Observer subject to approval of Owner.

C. Report observations and site decisions or instructions given to applicators or installers that are supplemental or contrary to manufacturers' written instructions.

3.07 DEFECT ASSESSMENT

A. Replace Work or portions of the Work not conforming to specified requirements.

B. If, in the opinion of Architect, it is not practical to remove and replace the Work, Architect will direct an appropriate remedy or adjust payment.

END OF SECTION

SECTION 01 42 19 - REFERENCE STANDARDS

PART 1 GENERAL

1.01 SECTION INCLUDES

A. Requirements relating to referenced standards.

B. Reference standards full title and edition date.

1.02 RELATED REQUIREMENTS

A. Document 00 72 00 - General Conditions: Reference standards.

1.03 QUALITY ASSURANCE

A. For products or workmanship specified by reference to a document or documents not included in the Project Manual, also referred to as reference standards, comply with requirements of the standard, except when more rigid requirements are specified or are required by applicable codes.

B. Conform to reference standard of date of issue specified in this section, except where a specific date is established by applicable code.

C. Obtain copies of standards when required by the Contract Documents.

D. Should specified reference standards conflict with Contract Documents, request clarification from the Architect before proceeding.

E. Neither the contractual relationships, duties, or responsibilities of the parties in Contract nor those of the Architect shall be altered by the Contract Documents by mention or inference otherwise in any reference document.

PART 2 CONSTRUCTION INDUSTRY ORGANIZATION DOCUMENTS

2.01 AAMA -- AMERICAN ARCHITECTURAL MANUFACTURERS ASSOCIATION

A. AAMA/WDMA/CSA 101/I.S.2/A440 - North American Fenestration Standard/Specification for windows, doors, and skylights; 2011.

B. AAMA 501.2 - Field Check of Metal Storefronts, Curtain Walls, and Sloped Glazing Systems for Water Leakage; 2009 (part of AAMA 501).

C. AAMA 609 - Voluntary Guide Specification for Cleaning and Maintenance of Architectural Anodized Aluminum; 2009.

D. AAMA 611 - Voluntary Specification for Anodized Architectural Aluminum; 2012.

E. AAMA 612 - Voluntary Specification, Performance Requirements and Test Procedures for Combined Coatings of Anodic Oxide and Transparent Organic Coatings on Architectural Aluminum; 2002.

F. AAMA 1503 - Voluntary Test Method for Thermal Transmittance and Condensation Resistance of Windows, Doors and Glazed Wall Sections; 2009.

G. AAMA 2605 - Voluntary Specification, Performance Requirements and Test Procedures for Superior Performing Organic Coatings on Aluminum Extrusions and Panels[].

H. AAMA CW-10 - Care and Handling of Architectural Aluminum From Shop to Site; 2012.

2.02 AASHTO -- AMERICAN ASSOCIATION OF STATE HIGHWAY AND TRANSPORTATION OFFICIALS

A. AASHTO M 147 - Standard Specification for Materials for Aggregate and Soil-Aggregate Subbase, Base and Surface Courses; 1965 (2004).

B. AASHTO T 180 - Standard Specification for Moisture-Density Relations of Soils Using a 4.54 kg (10-lb) Rammer and a 457 mm (18 in.) Drop; 2010.

2.03 ACI -- AMERICAN CONCRETE INSTITUTE INTERNATIONAL

A. ACI 530/530.1/ERTA - Building Code Requirements and Specification for Masonry Structures and Related Commentaries; 2011.

2.04 AHRI -- AIR-CONDITIONING, HEATING, AND REFRIGERATION INSTITUTE

A. AHRI 210/240 - Standard for Performance Rating of Unitary Air-Conditioning and Air-Source Heat Pump Equipment; 2008.

B. AHRI 270 - Sound Performance Rating of Outdoor Unitary Equipment; 2008.

2.05 AI -- THE ASPHALT INSTITUTE

A. AI MS-2 - Mix Design Methods for Asphalt Concrete and Other Hot-Mix Types; 1997.

B. AI MS-19 - A Basic Asphalt Emulsion Manual; Fourth Edition.

2.06 AISC -- AMERICAN INSTITUTE OF STEEL CONSTRUCTION, INC.

AISC (COMM) - Commentary on the Specification for Structural Steel Buildings; 2005.

A. AISC 341 - Seismic Provisions for Structural Steel Buildings; 2010.

2.07 AMCA -- AIR MOVEMENT AND CONTROL ASSOCIATION INTERNATIONAL, INC.

A. AMCA 500-L - Laboratory Methods of Testing Louvers for Rating; 2012.

B. AMCA 511 - Certified Ratings Program for Air Control Devices; 2010.

2.08 ANSI -- AMERICAN NATIONAL STANDARDS INSTITUTE

A. ANSI A42-4 - American Standard Specification for Metal Lathing and Furring.

B. ANSI A108/A118/A136.1 - American National Standard Specifications for the Installation of Ceramic Tile - Version; 2013.1.

C. ANSI A108.1a - American National Standard Specifications for Installation of Ceramic Tile in the Wet-Set Method, with Portland Cement Mortar[].

D. ANSI A108.1b - American National Standard Specifications for Installation of Ceramic Tile on a Cured Portland Cement Mortar Setting Bed with Dry-Set or Latex Portland Cement Mortar[].

E. ANSI A108.1c - Specifications for Contractors Option: Installation of Ceramic Tile in the Wet-Set Method with Portland Cement Mortar or Installation of Ceramic Tile on a Cured Portland Cement Mortar Bed with Dry-Set or Latex Portland Cement[].

F. ANSI A108.3 - Quarry Tile and Paver Tile Installed With Portland Cement Mortar[].

G. ANSI A108.4 - American National Standard Specifications for Installation of Ceramic Tile with Organic Adhesives or Water Cleanable Tile-Setting Epoxy Adhesive[].

H. ANSI A108.5 - American National Standard Specifications for Installation of Ceramic Tile with Dry-Set Portland Cement Mortar or Latex-Portland Cement Mortar[].

I. ANSI A108.6 - American National Standard Specifications for Installation of Ceramic Tile with Chemical Resistant, Water Cleanable Tile-Setting and -Grouting Epoxy[].

J. ANSI A108.8 - American National Standard Specifications for Installation of Ceramic Tile with Chemical Resistant Furan Resin Mortar and Grout[].

K. ANSI A108.9 - American National Standard Specifications for Installation of Ceramic Tile with Modified Epoxy Emulsion Mortar/Grout[].

L. ANSI A108.10 - American National Standard Specifications for Installation of Grout in Tilework[].

M. ANSI A108.11 - American National Standard for Interior Installation of Cementitious Backer Units[].

N. ANSI A108.12 - American National Standard for Installation of Ceramic Tile with EGP (Exterior glue plywood) Latex-Portland Cement Mortar[].

O. ANSI A108.13 - American National Standard for Installation of Load Bearing, Bonded, Waterproof Membranes for Thin-Set Ceramic Tile and Dimension Stone[].

P. ANSI A118.1 - American National Standard Specifications for Dry-Set Portland Cement Mortar[].

Q. ANSI A118.3 - American National Standard Specifications for Chemical Resistant, Water Cleanable Tile Setting and Grouting Epoxy and Water Cleanable Tile Setting Epoxy Adhesive[].

R. ANSI A118.4 - American National Standard Specifications for Latex-Portland Cement Mortar[].

S. ANSI A118.5 - American National Standard Specifications for Chemical Resistant Furan Mortars and Grouts for Tile Installation[].

T. ANSI A118.6 - American National Standard Specifications for Standard Cement Grouts for Tile Installation[].

U. ANSI A118.7 - American National Standard Specifications for Polymer Modified Cement Grouts for Tile Installation[].

V. ANSI A118.9 - American National Standard Specifications for Test Methods and Specifications for Cementitious Backer Units[].

W. ANSI A118.15 - American National Standard Specifications for Improved Modified Dry-Set Cement Mortar; 2013.1.

X. ANSI A135.4 - American National Standard for Basic Hardboard; 2012.

Y. ANSI A137.1 - American National Standard Specifications for Ceramic Tile[].

Z. ANSI A161.2 - Performance Standards for Fabricated High Pressure Decorative Countertops; 1998.

AA. ANSI/SDI A250.8 - Specifications for Standard Steel Doors and Frames (SDI-100); 2014.

AB. ANSI/SDI A250.10 - Test Procedure and Acceptance Criteria for Prime Painted Steel Surfaces for Steel Doors and Frames; 2011.

AC. ANSI Z245.2 - American National Standard for Stationary Compactors -- Safety Requirements for Installation, Maintenance, and Operation; 2008.

2.09 ASCE -- AMERICAN SOCIETY OF CIVIL ENGINEERS

A. ASCE 7 - Minimum Design Loads for Buildings and Other Structures; 2011.

2.10 ASHRAE -- AMERICAN SOCIETY OF HEATING, REFRIGERATING AND AIR-CONDITIONING ENGINEERS, INC.

A. ASHRAE Guideline 1.1 - The HVAC Commissioning Process; 2012

B. ASHRAE Std 52.2 - Method of Testing General Ventilation Air-Cleaning Devices for Removal Efficiency by Particle Size; 2012.

C. ASHRAE Std 62.1 - Ventilation For Acceptable Indoor Air Quality[].

D. ASHRAE Std 129 - Measuring Air-Change Effectiveness; 1997 (Reaffirmed 2002).

2.11 ASTM A SERIES -- ASTM INTERNATIONAL

A. ASTM A53/A53M - Standard Specification for Pipe, Steel, Black and Hot-Dipped, Zinc-Coated, Welded and Seamless; 2012.

B. ASTM A240/A240M - Standard Specification for Chromium and Chromium-Nickel Stainless Steel Plate, Sheet, and Strip for Pressure Vessels and for General Applications; 2015.

C. ASTM A269/A269M - Standard Specification for Seamless and Welded Austenitic Stainless Steel Tubing for General Service; 2014e1.

D. ASTM A283/A283M - Standard Specification for Low and Intermediate Tensile Strength Carbon Steel Plates[].

E. ASTM A325 - Standard Specification for Structural Bolts, Steel, Heat Treated, 120/105 ksi Minimum Tensile Strength; 2010.

F. ASTM A463/A463M - Standard Specification for Steel Sheet, Aluminum-Coated, by the Hot-Dip Process; 2010.

G. ASTM A500/A500M - Standard Specification for Cold-Formed Welded and Seamless Carbon Steel Structural Tubing in Rounds and Shapes[].

H. ASTM A501/A501M - Standard Specification for Hot-Formed Welded and Seamless Carbon Steel Structural Tubing; 2014.

I. ASTM A615/A615M - Standard Specification for Deformed and Plain Carbon Steel Bars for Concrete Reinforcement; 2015.

J. ASTM A1008/A1008M - Standard Specification for Steel, Sheet, Cold-Rolled, Carbon, Structural, High-Strength, Low Alloy, and High-Strength Low-Alloy with Improved Formability, Solution Hardened, and Bake Hardenable[].

K. ASTM A1064/A1064M - Standard Specification for Carbon-Steel Wire and Welded Wire Reinforcement, Plain and Deformed, for Concrete[].

2.12 ASTM B SERIES -- ASTM INTERNATIONAL

A. ASTM B32 - Standard Specification for Solder Metal; 2008 (Reapproved 2014).

B. ASTM B36/B36M - Standard Specification for Brass Plate, Sheet, Strip, And Rolled Bar; 2013.

C. ASTM B456 - Standard Specification for Electrodeposited Coatings of Copper Plus Nickel Plus Chromium and Nickel Plus Chromium; 2011e1.

2.13 ASTM C SERIES -- ASTM INTERNATIONAL

A. ASTM C4 - Standard Specification for Clay Drain Tile and Perforated Clay Drain Tile; 2004 (Reapproved 2009).

B. ASTM C33/C33M - Standard Specification for Concrete Aggregates; 2013.

C. ASTM C67 - Standard Test Methods for Sampling and Testing Brick and Structural Clay Tile[].

D. ASTM C90 - Standard Specification for Loadbearing Concrete Masonry Units; 2014.

E. ASTM C91/C91M - Standard Specification for Masonry Cement; 2012.

F. ASTM C94/C94M - Standard Specification for Ready-Mixed Concrete; 2014.

G. ASTM C109/C109M - Standard Test Method for Compressive Strength of Hydraulic Cement Mortars (Using 2-in. or (50-mm) Cube Specimens)[].

H. ASTM C129 - Standard Specification for Nonloadbearing Concrete Masonry Units; 2011.

I. ASTM C136 - Standard Test Method for Sieve Analysis of Fine and Coarse Aggregates; 2006.

J. ASTM C140/C140M - Standard Test Methods of Sampling and Testing Concrete Masonry Units and Related Units; 2014.

K. ASTM C144 - Standard Specification for Aggregate for Masonry Mortar; 2011.

L. ASTM C150/C150M - Standard Specification for Portland Cement; 2012.

M. ASTM C206 - Standard Specification for Finishing Hydrated Lime; 2003 (Reapproved 2009).

N. ASTM C270 - Standard Specification for Mortar for Unit Masonry; 2012.

O. ASTM C315 - Standard Specification for Clay Flue Linings; 2007 (Reapproved 2011).

P. ASTM C348 - Standard Test Method for Flexural Strength of Hydraulic-Cement Mortars; 2014.

Q. ASTM C387/C387M - Standard Specification for Packaged, Dry, Combined Materials for Concrete and High Strength Mortar; 2011b.

R. ASTM C412 - Standard Specification for Concrete Drain Tile; 2011.

S. ASTM C476 - Standard Specification for Grout for Masonry; 2010.

T. ASTM C503/C503M - Standard Specification for Marble Dimension Stone[].

U. ASTM C518 - Standard Test Method for Steady-State Thermal Transmission Properties by Means of the Heat Flow Meter Apparatus; 2010.

V. ASTM C578 - Standard Specification for Rigid, Cellular Polystyrene Thermal Insulation; 2014.

W. ASTM C615/C615M - Standard Specification for Granite Dimension Stone[].

X. ASTM C635/C635M - Standard Specification for the Manufacture, Performance, and Testing of Metal Suspension Systems for Acoustical Tile and Lay-in Panel Ceilings[].

Y. ASTM C636/C636M - Standard Practice for Installation of Metal Ceiling Suspension Systems for Acoustical Tile and Lay-In Panels; 2013.

Z. ASTM C645 - Standard Specification for Nonstructural Steel Framing Members; 2014.

AA. ASTM C780 - Standard Test Method for Preconstruction and Construction Evaluation of Mortars for Plain and Reinforced Unit Masonry; 2012.

AB. ASTM C834 - Standard Specification for Latex Sealants; 2014.

AC. ASTM C841 - Standard Specification for Installation of Interior Lathing and Furring; 2003 (Reapproved 2013).

AD. ASTM C847 - Standard Specification for Metal Lath; 2014a.

AE. ASTM C919 - Standard Practice for Use of Sealants in Acoustical Applications; 2012.

AF. ASTM C926 - Standard Specification for Application of Portland Cement-Based Plaster; 2014a.

AG. ASTM C932 - Standard Specification for Surface-Applied Bonding Compounds for Exterior Plastering; 2006 (Reapproved 2013).

AH. ASTM C954 - Standard Specification for Steel Drill Screws for the Application of Gypsum Panel Products or Metal Plaster Bases to Steel Studs From 0.033 in. (0.84 mm) to 0.112 in. (2.84 mm) in Thickness; 2011.

AI. ASTM C955 - Standard Specification for Load-Bearing (Transverse and Axial) Steel Studs, Runners (Tracks), and Bracing or Bridging for Screw Application of Gypsum Panel Products and Metal Plaster Bases; 2011c.

AJ. ASTM C1002 - Standard Specification for Steel Self-Piercing Tapping Screws for Application of Gypsum Panel Products or Metal Plaster Bases to Wood Studs or Steel Studs; 2014.

AK. ASTM C1019 - Standard Test Method for Sampling and Testing Grout; 2013.

AL. ASTM C1021 - Standard Practice for Laboratories Engaged in Testing of Building Sealants; 2008 (Reapproved 2014).

AM. ASTM C1036 - Standard Specification for Flat Glass; 2011e1.

AN. ASTM C1047 - Standard Specification for Accessories For Gypsum Wallboard and Gypsum Veneer Base; 2014a.

AO. ASTM C1048 - Standard Specification for Heat-Strengthened and Fully Tempered Flat Glass; 2012.

AP. ASTM C1063 - Standard Specification for Installation of Lathing and Furring to Receive Interior and Exterior Portland Cement-Based Plaster; 2014b.

AQ. ASTM C1072 - Standard Test Method for Measurement of Masonry Flexural Bond Strength; 2013.

AR. ASTM C1077 - Standard Practice for Laboratories Testing Concrete and Concrete Aggregates for Use in Construction and Criteria for Laboratory Evaluation; 2014.

AS. ASTM C1093 - Standard Practice for Accreditation of Testing Agencies for Masonry; 2013.

AT. ASTM C1177/C1177M - Standard Specification for Glass Mat Gypsum Substrate for Use as Sheathing[].

AU. ASTM C1178/C1178M - Standard Specification for Coated Glass Mat Water-Resistant Gypsum Backing Panel[].

AV. ASTM C1248 - Standard Test Method for Staining of Porous Substrate by Joint Sealants; 2008 (Reapproved 2012).

AW. ASTM C1278/C1278M - Standard Specification for Fiber-Reinforced Gypsum Panel; 2007a (Reapproved 2011).

AX. ASTM C1280 - Standard Specification for Application of Gypsum Sheathing Board; 2013.

AY. ASTM C1288 - Standard Specification for Discrete Non-Asbestos Fiber-Cement Interior Substrate Sheets; 1999 (Reapproved 2010).

AZ. ASTM C1289 - Standard Specification for Faced Rigid Cellular Polyisocyanurate Thermal Insulation Board[].

BA. ASTM C1314 - Standard Test Method for Compressive Strength of Masonry Prisms; 2012.

BB. ASTM C1325 - Specification for Non-Asbestos Fiber-Mat Reinforced Cementitious Backer Units; 2014.

BC. ASTM C1330 - Standard Specification for Cylindrical Sealant Backing for Use with Cold Liquid-Applied Sealants; 2002 (Reapproved 2013).

BD. ASTM C1363 - Standard Test Method for Thermal Performance of Building Assemblies by Means of a Hot Box Apparatus; 2011.

BE. ASTM C1396/C1396M - Standard Specification for Gypsum Board; 2014.

BF. ASTM C1503 - Standard Specification for Silvered Flat Glass Mirror; 2008 (Reapproved 2013).

BG. ASTM C1658/C1658M - Standard Specification for Glass Mat Gypsum Panels[].

2.14 ASTM D SERIES -- ASTM INTERNATIONAL

A. ASTM D16 - Standard Terminology for Paint, Related Coatings, Materials, and Applications; 2012.

B. ASTM D41/D41M - Standard Specification for Asphalt Primer Used in Roofing, Dampproofing, and Waterproofing[].

C. ASTM D226/D226M - Standard Specification for Asphalt-Saturated Organic Felt Used in Roofing and Waterproofing[].

D. ASTM D312 - Standard Specification for Asphalt Used in Roofing; 2000 (Reapproved 2006).

E. ASTM D412 - Standard Test Methods for Vulcanized Rubber and Thermoplastic Elastomers--Tension[].

F. ASTM D449/D449M - Standard Specification for Asphalt Used in Dampproofing and Waterproofing; 2003 (Reapproved 2014).

G. ASTM D570 - Standard Test Method for Water Absorption of Plastics; 1998 (Reapproved 2010).

H. ASTM D638 - Standard Test Method for Tensile Properties of Plastics; 2010.

I. ASTM D698 - Standard Test Methods for Laboratory Compaction Characteristics of Soil Using Standard Effort (12,400 ft-lbf/ft3 (600 kN-m/m3)); 2012.

J. ASTM D946 - Standard Specification for Penetration-Graded Asphalt Cement for Use in Pavement Construction; 2009a.

K. ASTM D1056 - Standard Specification for Flexible Cellular Materials--Sponge or Expanded Rubber; 2014.

L. ASTM D1227 - Standard Specification for Emulsified Asphalt Used as a Protective Coating for Roofing; 2013.

M. ASTM D1308 - Standard Test Method for Effect of Household Chemicals on Clear and Pigmented Organic Finishes; 2002 (Reapproved 2013).

N. ASTM D1556 - Standard Test Method for Density and Unit Weight of Soil in Place by the Sand-Cone Method; 2007.

O. ASTM D1557 - Standard Test Methods for Laboratory Compaction Characteristics of Soil Using Modified Effort (56,000 ft-lbf/ft3 (2,700 kN m/m3)); 2012.

P. ASTM D1667 - Standard Specification for Flexible Cellular Materials--Poly(Vinyl Chloride) Foam (Closed-Cell); 2005 (Reapproved 2011).

Q. ASTM D1970/D1970M - Standard Specification for Self-Adhering Polymer Modified Bituminous Sheet Materials Used as Steep Roofing Underlayment for Ice Dam Protection; 2013.

R. ASTM D2167 - Standard Test Method for Density and Unit Weight of Soil in Place by the Rubber Balloon Method; 2008.

S. ASTM D2178/D2178M - Standard Specification for Asphalt Glass Felt Used in Roofing and Waterproofing[].

T. ASTM D2240 - Standard Test Method for Rubber Property--Durometer Hardness; 2005 (Reapproved 2010).

U. ASTM D2487 - Standard Practice for Classification of Soils for Engineering Purposes (Unified Soil Classification System); 2011.

V. ASTM D2729 - Standard Specification for Poly(Vinyl Chloride) (PVC) Sewer Pipe and Fittings; 2011.

W. ASTM D2822/D2822M - Standard Specification for Asphalt Roof Cement, Asbestos-Containing; 2005 (Reapproved 2011)e1.

X. ASTM D2842 - Standard Test Method for Water Absorption of Rigid Cellular Plastics; 2012.

Y. ASTM D3017 - Standard Test Method for Water Content of Soil and Rock in Place by Nuclear Methods (Shallow Depth); 2005.

Z. ASTM D3273 - Standard Test Method for Resistance to Growth of Mold on the Surface of Interior Coatings in an Environmental Chamber; 2012.

AA. ASTM D3389 - Standard Test Method for Coated Fabrics Abrasion Resistance (Rotary Platform Abrader); 2010.

AB. ASTM D3740 - Standard Practice for Minimum Requirements for Agencies Engaged in the Testing and/or Inspection of Soil and Rock as Used in Engineering Design and Construction; 2012a.

AC. ASTM D3909/D3909M - Standard Specification for Asphalt Roll Roofing (Glass Felt) Surfaced with Mineral Granules; 2014.

AD. ASTM D4060 - Standard Test Method for Abrasion Resistance of Organic Coatings by the Taber Abraser; 2014.

AE. ASTM D4318 - Standard Test Methods for Liquid Limit, Plastic Limit, and Plasticity Index of Soils; 2010.

AF. ASTM D4355 - Standard Test Method for Deterioration of Geotextiles by Exposure to Light, Moisture and Heat in a Xenon Arc Type Apparatus; 2007.

AG. ASTM D4434/D4434M - Standard Specification for Poly(Vinyl Chloride) Sheet Roofing; 2012.

AH. ASTM D4442 - Standard Test Methods for Direct Moisture Content Measurement of Wood and Wood-Base Materials; 2007.

AI. ASTM D4479/D4479M - Standard Specification for Asphalt Roof Coatings - Asbestos-Free; 2007 (Reapproved 2012)e1.

AJ. ASTM D4491 - Standard Test Methods for Water Permeability of Geotextiles by Permittivity; 1999a (Reapproved 2014).

AK. ASTM D4586/D4586M - Standard Specification for Asphalt Roof Cement, Asbestos-Free; 2007 (Reapproved 2012)e1.

AL. ASTM D4632 - Standard Test Method for Grab Breaking Load and Elongation of Geotextiles; 2008.

AM. ASTM D4674 - Standard Practice for Accelerated Testing for Color Stability of Plastics Exposed to Indoor Office Environments; 2002a (Reapproved 2010).

AN. ASTM D4751 - Standard Test Method for Determining Apparent Opening Size of a Geotextile; 2012.

AO. ASTM D4873 - Standard Guide for Identification, Storage, and Handling of Geosynthetic Rolls and Samples; 2002 (Reapproved 2009).

AP. ASTM D6938 - Standard Test Method for In-Place Density and Water Content of Soil and Soil-Aggregate by Nuclear Methods (Shallow Depth); 2010.

2.15 ASTM E SERIES -- ASTM INTERNATIONAL

A. ASTM E84 - Standard Test Method for Surface Burning Characteristics of Building Materials; 2014.

B. ASTM E90 - Standard Test Method for Laboratory Measurement of Airborne Sound Transmission Loss of Building Partitions and Elements; 2009.

C. ASTM E96/E96M - Standard Test Methods for Water Vapor Transmission of Materials; 2014.

D. ASTM E119 - Standard Test Methods for Fire Tests of Building Construction and Materials; 2012.

E. ASTM E136 - Standard Test Method for Behavior of Materials in a Vertical Tube Furnace At 750 Degrees C; 2012.

F. ASTM E329 - Standard Specification for Agencies Engaged in Construction Inspection and/or Testing; 2014a.

G. ASTM E413 - Classification for Rating Sound Insulation; 2010.

H. ASTM E518/E518M - Standard Test Methods for Flexural Bond Strength of Masonry; 2010.

I. ASTM E543 - Standard Specification for Agencies Performing Nondestructive Testing; 2013.

J. ASTM E557 - Standard Guide for Architectural Design and Installation Practices for Sound Isolation between Spaces Separated by Operable Partitions; 2012.

K. ASTM E580/E580M - Standard Practice for Installation of Ceiling Suspension Systems for Acoustical Tile and Lay-in Panels in Areas Subject to Earthquake Ground Motions; 2014.

L. ASTM E596 - Standard Test Method for Laboratory Measurement of Noise Reduction of Sound-Isolating Enclosures; 1996 (Reapproved 2009).

M. ASTM E605 - Standard Test Methods for Thickness and Density of Sprayed Fire-Resistive Material (SFRM) Applied to Structural Members; 1993 (Reapproved 2011).

N. ASTM E736 - Standard Test Method for Cohesion/Adhesion of Sprayed Fire-Resistive Materials Applied to Structural Members; 2000 (Reapproved 2011).

O. ASTM E759 - Standard Test Method for Effect of Deflection on Sprayed Fire-Resistive Material Applied to Structural Members; 1992 (Reapproved 2011).

P. ASTM E779 - Standard Test Method for Determining Air Leakage Rate by Fan Pressurization; 2010.

Q. ASTM E814 - Standard Test Method for Fire Tests of Through-Penetration Fire Stops[].

R. ASTM E985 - Standard Specification for Permanent Metal Railing Systems and Rails for Buildings; 2000 (Reapproved 2006).

S. ASTM E1105 - Standard Test Method for Field Determination of Water Penetration of Installed Exterior Windows, Skylights, Doors, and Curtain Walls, by Uniform or Cyclic Static Air Pressure Difference; 2000 (Reapproved 2008)

T. ASTM E1264 - Standard Classification for Acoustical Ceiling Products; 2014.

U. ASTM E1300 - Standard Practice for Determining Load Resistance of Glass in Buildings; 2012a.

V. ASTM E1573 - Standard Test Method for Evaluating Masking Sound in Open Offices Using A-Weighted and One-Third Octave Band Sound Pressure Levels; 2009.

W. ASTM E1966 - Standard Test Method for Fire Resistive Joint Systems; 2007 (Reapproved 2011).

X. ASTM E1980 - Standard Practice for Calculating Solar Reflectance Index of Horizontal and Low-Sloped Opaque Surfaces; 2011.

Y. ASTM E1996 - Standard Specification for Performance of Exterior Windows, Curtain Walls, Doors, and Impact Protective Systems Impacted by Windborne Debris in Hurricanes; 2014.

Z. ASTM E2178 - Standard Test Method for Air Permeance of Building Materials[].

AA. ASTM E2190 - Standard Specification for Insulating Glass Unit Performance and Evaluation; 2010.

AB. ASTM E2307 - Standard Test Method or Determining Fire Resistance of Perimeter Fire Barriers Using Intermediate-Scale, Multi-story Test Apparatus; 2010.

AC. ASTM E2837 - Standard Test Method for Determining the Fire Resistance of Continuity Head-of-Wall Joint Systems Installed Between Rated Wall Assemblies and Nonrated Horizontal Assemblies; 2013.

2.16 ASTM F SERIES -- ASTM INTERNATIONAL

A. ASTM F386 - Standard Test Method for Thickness of Resilient Flooring Materials Having Flat Surfaces; 2011.

B. ASTM F588 - Standard Test Methods for Measuring the Forced Entry Resistance of Window Assemblies, Excluding Glazing Impact; 2014.

C. ASTM F710 - Standard Practice for Preparing Concrete Floors to Receive Resilient Flooring; 2011.

D. ASTM F793 - Standard Classification of Wall Covering by Use Characteristics; 2010a.

E. ASTM F925 - Standard Test Method for Resistance to Chemicals of Resilient Flooring[].

F. ASTM F970 - Standard Test Method for Static Load Limit; 2007 (Reapproved 2011).

G. ASTM F1869 - Standard Test Method for Measuring Moisture Vapor Emission Rate of Concrete Subfloor Using Anhydrous Calcium Chloride; 2011.

H. ASTM F2055 - Standard Test Method for Size and Squareness of Resilient Floor Tile by Dial Gage Method; 2010.

2.17 ASTM G SERIES -- ASTM INTERNATIONAL

A. ASTM G21 - Standard Practice for Determining Resistance of Synthetic Polymeric Materials to Fungi; 2013.

2.18 AWI/AWMAC/WI -- JOINT PUBLICATION OF ARCHITECTURAL WOODWORK INSTITUTE/ARCHITECTURAL WOODWORK MANUFACTURERS ASSOCIATION OF CANADA/WOODWORK INSTITUTE

A. AWI/AWMAC/WI (AWS) - Architectural Woodwork Standards; 2014.

2.19 AWPA -- AMERICAN WOOD-PRESERVERS' ASSOCIATION

A. AWPA U1 - Use Category System: User Specification for Treated Wood; 2012.

2.20 AWS -- AMERICAN WELDING SOCIETY

A. AWS D1.1/D1.1M - Structural Welding Code - Steel; 2011 w/Errata.

2.21 BHMA -- BUILDERS HARDWARE MANUFACTURERS ASSOCIATION

A. BHMA A156.1 - American National Standard for Butts and Hinges; 2013 (ANSI/BHMA A156.1).

B. BHMA A156.2 - American National Standard for Bored and Preassembled Locks & Latches; 2011 (ANSI/BHMA A156.2).

C. BHMA A156.4 - American National Standard for Door Controls - Closers; 2013 (ANSI/BHMA A156.4).

D. BHMA A156.7 - American National Standard for Template Hinge Dimensions; 2014 (ANSI/BHMA A156.7).

E. BHMA A156.8 - American National Standard for Door Controls - Overhead Stops and Holders; 2010 (ANSI/BHMA A156.8).

F. BHMA A156.9 - American National Standard for Cabinet Hardware; 2010 (ANSI/BHMA A156.9).

G. BHMA A156.18 - American National Standard for Materials and Finishes; 2012 (ANSI/BHMA A156.18).

H. BHMA A156.21 - American National Standard for Thresholds; 2014 (ANSI/BHMA A156.21).

I. BHMA A156.22 - American National Standard for Door Gasketing and Edge Seal Systems, Builders Hardware Manufacturers Association; 2012 (ANSI/BHMA A156.22).

J. BHMA A156.115 - American National Standard for Hardware Preparation in Steel Doors and Steel Frames; 2014 (ANSI/BHMA A156.115).

2.22 CAL -- STATE OF CALIFORNIA

A. CAL (EESR) - California Energy Efficiency Standards Residential Alternative Calculation Method (ACM) Approval Manual; 2005.

B. CAL (CDPH SM) - Standard Method for the Testing and Evaluation of Volatile Organic Chemical Emissions From Indoor Sources Using Environmental Chambers; California Department of Public Health; v1.1, 2010.

2.23 CSA -- CSA INTERNATIONAL (FORMERLY CANADIAN STANDARDS ASSOCIATION)

A. CAN/CSA Z809 - National Standard for Sustainable Forest Management; CSA International Inc.; 2008.

2.24 FM -- FACTORY MUTUAL RESEARCH CORPORATION

A. FM 4991 - Approval Standard for Firestop Contractors; 2013.

B. FM DS 1-28 - Wind Design; 2007.

C. FM P7825 - Approval Guide; current edition.

2.25 GA -- GYPSUM ASSOCIATION

A. GA-216 - Application and Finishing of Gypsum Board; 2013.

B. GA-600 - Fire Resistance Design Manual; 2012.

2.26 GANA -- GLASS ASSOCIATION OF NORTH AMERICA

A. GANA (GM) - GANA Glazing Manual; 2009.

B. GANA (SM) - GANA Sealant Manual; 2008.

C. GANA (LGDG) - Laminated Glazing Reference Manual; 2009.

D. GANA (TIPS) - Mirrors: Handle with Extreme Care (Tips for the Professional on the Care and Handling of Mirrors); 2011.

2.27 GREENSEAL -- GREEN SEAL, INC.

A. GreenSeal GS-11 - Architectural Paints; 2013.

2.28 HPVA -- HARDWOOD PLYWOOD VENEER ASSOCIATION

A. HPVA HP-1 - American National Standard for Hardwood and Decorative Plywood; 2009 (ANSI/HPVA HP-1).

2.29 IAS -- INTERNATIONAL ACCREDITATION SERVICE

A. IAS AC172 - Accreditation Criteria for Fabricator Inspection Programs for Structural Steel; International Accreditation Service, Inc.; 2011.

2.30 ICC -- INTERNATIONAL CODE COUNCIL, INC.

A. ICC A117.1 - Accessible and Usable Buildings and Facilities; 2009 (ANSI).

2.31 IGMA -- INSULATING GLASS MANUFACTURERS ALLIANCE

A. SIGMA TM-3000 - Glazing Guidelines for Sealed Insulating Glass Units; 2004.

2.32 ISFA - INTERNATIONAL SURFACE FABRICATORS ASSOCIATION

A. ISFA 2-01 - Classification and Standards for Solid Surfacing Material; 2013.

B. ISFA 3-01 - Classification and Standards for Quartz Surfacing Material; 2013.

2.33 ITS -- INTERTEK TESTING SERVICES NA, INC.

A. ITS (DIR) - Directory of Listed Products; current edition.

2.34 KCMA -- KITCHEN CABINET MANUFACTURERS ASSOCIATION

A. KCMA (DIR) - Directory of Certified Cabinet Manufacturers; current edition, online.

B. KCMA A161.1 - Performance and Construction Standard for Kitchen and Vanity Cabinets; 2012 (ANSI/KCMA A161.1).

2.35 MFMA -- MAPLE FLOORING MANUFACTURERS ASSOCIATION

A. MFMA (SPEC) - Guide Specifications for Maple Flooring Systems; current edition.

2.36 MIA -- MARBLE INSTITUTE OF AMERICA, INC.

A. MIA (DSDM) - Dimensional Stone Design Manual; VII, 2007.

2.37 NAAMM -- THE NATIONAL ASSOCIATION OF ARCHITECTURAL METAL MANUFACTURERS

A. NAAMM HMMA 840 - Guide Specifications for Installation and Storage of Hollow Metal Doors and Frames; 2007.

B. NAAMM AMP 500-06 - Metal Finishes Manual; 2006.

2.38 NBGQA -- NATIONAL BUILDING GRANITE QUARRIES ASSOCIATION, INC.

A. NBGQA (SPEC) - Specifications for Architectural Granite; Version 14-1, 2014.

2.39 NECA -- NATIONAL ELECTRICAL CONTRACTORS ASSOCIATION

A. NECA 1 - Standard for Good Workmanship in Electrical Construction; 2010.

2.40 NEMA -- NATIONAL ELECTRICAL MANUFACTURERS ASSOCIATION

A. NEMA LD 3 - High-Pressure Decorative Laminates; 2005.

B. NEMA MG 1 - Motors and Generators; 2014.

2.41 NFPA -- NATIONAL FIRE PROTECTION ASSOCIATION

A. NFPA 10 - Standard for Portable Fire Extinguishers; 2013.

B. NFPA 13 - Standard for the Installation of Sprinkler Systems; 2013 (Errata 2014).

C. NFPA 70 - National Electrical Code; Most Recent Edition Adopted by Authority Having Jurisdiction, Including All Applicable Amendments and Supplements.

D. NFPA 80 - Standard for Fire Doors and Other Opening Protectives; 2013.

E. NFPA 82 - Standard on Incinerators and Waste and Linen Handling Systems and Equipment; 2014.

F. NFPA 241 - Standard for Safeguarding Construction, Alteration, and Demolition Operations; 2013.

G. NFPA 701 - Standard Methods of Fire Tests for Flame Propagation of Textiles and Films; 2010.

2.42 NHLA -- NATIONAL HARDWOOD LUMBER ASSOCIATION

A. NHLA G-101 - Rules for the Measurement & Inspection of Hardwood & Cypress; 2011.

2.43 NRCA -- NATIONAL ROOFING CONTRACTORS ASSOCIATION

A. NRCA ML104 - The NRCA Roofing and Waterproofing Manual; Fifth Edition, with interim updates.

2.44 NWFA -- NATIONAL WOOD FLOORING ASSOCIATION

A. NWFA (IG) - Installation Guidelines; current edition located at www.nwfa.org.

2.45 NWWDA -- NATIONAL WOOD WINDOW AND DOOR ASSOCIATION (NAME CHANGED TO WDMA)

2.46 PECI - PORTLAND ENERGY CONSERVATION, INC.

A. PECI (MCGS) - Model Commissioning Guide Specifications; Portland Energy Conservation, Inc.; located at http://www.peci.org/library/mcpgs.htm; current edition.

B. PECI (MCP) - Model Commissioning Plan; Portland Energy Conservation, Inc.; located at http://www.peci.org/library/mcpgs.htm; current edition.

C. PECI (Samples) - Sample Forms for Prefunctional Checklists and Functional Performance Tests; Portland Energy Conservation, Inc.; located at http://www.peci.org/ftguide/index.htm; current edition.

2.47 SCAQMD -- SOUTH COAST AIR QUALITY MANAGEMENT DISTRICT

A. SCAQMD 1168 - South Coast Air Quality Management District Rule No.1168; current edition; www.aqmd.gov.

2.48 SMACNA -- SHEET METAL AND AIR CONDITIONING CONTRACTORS' NATIONAL ASSOCIATION, INC.

A. SMACNA (ASMM) - Architectural Sheet Metal Manual; 2012.

B. SMACNA (OCC) - IAQ Guideline for Occupied Buildings Under Construction; 2007.

2.49 SPIB -- SOUTHERN PINE INSPECTION BUREAU, INC.

A. SPIB (GR) - Grading Rules; 2014.

2.50 SPRI -- SINGLE PLY ROOFING INDUSTRY

A. SPRI ES-1 - Wind Design Standard for Edge Systems Used with Low Slope Roofing Systems; 2011. (ANSI/SPRI/FM 4435/ES-1).

2.51 SSPC -- THE SOCIETY FOR PROTECTIVE COATINGS

A. SSPC-Paint 15 - Steel Joist Shop Paint; 1999 (Ed. 2004).

B. SSPC-Paint 20 - Zinc-Rich Primers (Type I, "Inorganic," and Type II, "Organic"); 2002 (Ed. 2004).

C. SSPC-Paint 25 - Red Iron Oxide, Zinc Oxide, Raw Linseed Oil and Alkyd Primer; 1991 (Part of Steel Structures Painting Manual, Vol. Two).

D. SSPC-SP 2 - Hand Tool Cleaning; 1982 (Ed. 2004).

2.52 TCNA -- TILE COUNCIL OF NORTH AMERICA, INC.

A. TCNA (HB) - Handbook for Ceramic, Glass, and Stone Tile Installation - Version; 2013.1.

2.53 UL -- UNDERWRITERS LABORATORIES INC.

A. UL (BMD) - Building Materials Directory; current edition.

B. UL (EAUED) - Electrical Appliance and Utilization Equipment Directory; current edition.

C. UL (FPED) - Fire Protection Equipment Directory; current edition.

D. UL (FRD) - Fire Resistance Directory; current edition.

E. UL (RMSD) - Roofing Materials and Systems Directory; current edition.

F. UL 10B - Standard for Fire Tests of Door Assemblies; Current Edition, Including All Revisions.

G. UL 325 - Standard for Door, Drapery, Gate, Louver, and Window Operators and Systems; Current Edition, Including All Revisions.

H. UL 2043 - Fire Test for Heat and Visible Smoke Release for Discrete Products and Their Accessories Installed in Air-Handling Spaces; Current Edition, Including All Revisions.

I. UL 2079 - Standard for Tests for Fire Resistance of Building Joint Systems; Underwriters Laboratories Inc.; 2004.

2.54 USGBC -- U. S. GREEN BUILDING COUNCIL

A. USGBC LEED-NC - LEED Green Building Rating System for New Construction and Major Renovations; 2009.

2.55 WASTEC -- WASTE EQUIPMENT TECHNOLOGY ASSOCIATION

A. WASTEC (SCRG) - WASTEC Listing of Rated Stationary Compactors; 2013.

2.56 WDMA -- WINDOW AND DOOR MANUFACTURERS ASSOCIATION (FORMERLY NWWDA)

A. WDMA I.S. 1A - Interior Architectural Wood Flush Doors; 2013. (ANSI/WDMA I.S. 1A)

2.57 WWPA -- WESTERN WOOD PRODUCTS ASSOCIATION

A. WWPA G-5 - Western Lumber Grading Rules; 2011.

PART 3 UNITED STATES GOVERNMENT AND RELATED AGENCIES DOCUMENTS

3.01 CFR -- CODE OF FEDERAL REGULATIONS

A. ADA Standards - Americans with Disabilities Act (ADA) Standards for Accessible Design; 2010.

B. 16 CFR 260 - Guides for the Use of Environmental Marketing Claims; Federal Trade Commission; current edition.

C. 29 CFR 1926 - U.S. Occupational Safety and Health Standards; current edition. (for construction work)

D. 36 CFR 1191 - Americans with Disabilities Act (ADA) Accessibility Guidelines for Buildings and Facilities; Architectural Barriers Act (ABA) Accessibility Guidelines; current edition.

3.02 COE -- CORPS OF ENGINEERS, U.S. ARMY

A. COE CRD-C 48 - Method of Test for Water Permeability of Concrete; 1992.

3.03 PS -- PRODUCT STANDARDS

A. PS 1 - Structural Plywood; 2009.

B. PS 20 - American Softwood Lumber Standard; 2010.

END OF SECTION

SECTION 01 50 00 - TEMPORARY FACILITIES AND CONTROLS

PART 1 GENERAL

1.01 SECTION INCLUDES

A. Temporary utilities.

B. Temporary telecommunications services.

C. Temporary sanitary facilities.

D. Temporary Controls: Barriers, enclosures, fencing, and signs.

E. Security requirements.

F. Vehicular access and parking.

G. Waste removal facilities and services.

H. Project identification sign.

I. Field offices.

1.02 REFERENCE STANDARDS

A. ASTM E90 - Standard Test Method for Laboratory Measurement of Airborne Sound Transmission Loss of Building Partitions and Elements; 2009.

1.03 TEMPORARY UTILITIES

A. Owner will provide the following:
   1. Electrical power and metering, consisting of connection to existing facilities.
   2. Water supply, consisting of connection to existing facilities.

B. Provide and pay for all electrical power, lighting, heating and cooling, and ventilation required for construction purposes.

C. New permanent facilities may be used.

D. Use trigger-operated nozzles for water hoses, to avoid waste of water.

1.04 TELECOMMUNICATIONS SERVICES

A. Provide, maintain, and pay for telecommunications services to field office at time of project mobilization.

B. Telecommunications services shall include:
   1. Windows-based personal computer dedicated to project telecommunications, with necessary software and laser printer.
   2. Telephone Land Lines: One line, minimum; one handset per line.
   3. Internet Connections: Minimum of one; Cable modem or faster.
   4. Email: Account/address reserved for project use.
   5. Facsimile Service: Minimum of one dedicated fax machine/printer, with dedicated phone line.
   6. Facsimile Service: Fax-to-email software on personal computer.

1.05 TEMPORARY SANITARY FACILITIES

A. Provide and maintain required facilities and enclosures. Provide at time of project mobilization.

B. Maintain daily in clean and sanitary condition.

C. At end of construction, return facilities to same or better condition as originally found.

1.06 BARRIERS

A. Provide barriers to prevent unauthorized entry to construction areas, to prevent access to areas that could be hazardous to workers or the public, to allow for owner's use of site and to protect existing facilities and adjacent properties from damage from construction operations and demolition.

B. Provide barricades and sidewalk shed covered walkways required by governing authorities for public rights-of-way and for public access to existing building.

C. Provide protection for plants designated to remain. Replace damaged plants.

D. Protect non-owned vehicular traffic, stored materials, site, and structures from damage.

1.07 FENCING

A. Construction: Contractor's option.

B. Provide 6 foot high fence around construction site; equip with vehicular and pedestrian gates with locks.

1.08 EXTERIOR ENCLOSURES

A. Provide temporary insulated weather tight closure of exterior openings to accommodate acceptable working conditions and protection for Products, to allow for temporary heating and maintenance of required ambient temperatures identified in individual specification sections, and to prevent entry of unauthorized persons. Provide access doors with self-closing hardware and locks.

1.09 SECURITY

A. Provide security and facilities to protect Work, existing facilities, and Owner's operations from unauthorized entry, vandalism, or theft.

B. Coordinate with Owner's security program.

1.10 VEHICULAR ACCESS AND PARKING

A. Comply with regulations relating to use of pedestrian plazas and walks, access to emergency facilities, and access for emergency vehicles.

B. Coordinate access and haul routes with governing authorities and Owner.

C. Provide and maintain access to fire hydrants, free of obstructions.

D. Do not allow vehicle parking on existing pavement.

1.11 WASTE REMOVAL

A. Provide waste removal facilities and services as required to maintain the site in clean and orderly condition.

B. Provide containers with lids. Remove trash from site periodically.

C. If materials to be recycled or re-used on the project must be stored on-site, provide suitable non-combustible containers; locate containers holding flammable material outside the structure unless otherwise approved by the authorities having jurisdiction.

1.12 PROJECT IDENTIFICATION

A. Erect on site at location indicated.

B. Provide project identification sign of design, construction, and location approved by Owner.

C. No other signs are allowed without Owner permission except those required by law.

1.13 FIELD OFFICES

A. Office: Weathertight, with lighting, electrical outlets, heating, cooling equipment, and equipped with sturdy furniture, drawing rack and drawing display table.

B. Provide space for Project meetings, with table and chairs to accommodate 8 persons.

C. Locate offices a minimum distance of 30 feet from existing and new structures.

1.14 REMOVAL OF UTILITIES, FACILITIES, AND CONTROLS

A. Remove temporary utilities, equipment, facilities, materials, prior to Substantial Completion inspection.

B. Remove underground installations to a minimum depth of 2 feet. Grade site as indicated.

C. Clean and repair damage caused by installation or use of temporary work.

D. Restore existing facilities used during construction to original condition.

E. Restore new permanent facilities used during construction to specified condition.

PART 2 PRODUCTS - NOT USED

PART 3 EXECUTION - NOT USED

END OF SECTION

SECTION 01 53 90 –TEMPORARY TREE PROTECTION

PART 1 - GENERAL

1.1 RELATED DOCUMENTS

A. Drawings and general provisions of the Contract, including General and Supplementary Conditions and Division 01 Specification Sections, apply to this Section.

1.2 SUMMARY

A. Section includes:

1. Root pruning
2. Crown pruning.
3. Temporary tree protection.
4. Maintenance during construction
5. Interim and permanent irrigation adjustment.
6. Post-construction tree care.

B. Related Work

1. Section 02 41 00 – Selective Demolition: Tree removal
2. Section 32 93 00 Plants – Transplanting requirements

1.3 REQUIREMENTS

A. An established tree care company shall perform tree protection and maintenance, including work to erect barriers and put in place measures to protect trees from mechanical and chemical insult. Mechanical insult includes damage to branches and the main leader (trunk) from physical impact; chemical insult refers to changes in soil and environmental pH resulting from construction work.

B. Company shall have on staff or retain an ISA-Certified Arborist to oversee and supervise tree protection and maintenance for the duration of the project.

1. The ISA Certified Arborist (NY) shall perform weekly inspections of the work, during which time the Arborist shall document the status of the maintenance work, issues or problems requiring immediate action by the Contractor or items affecting the Contractor’s maintenance schedule.
2. Within 24 hours of each site inspection, the Arborist shall submit a Restoration/Maintenance Inspection Report, to include but not be limited to: list of inspection attendees, the item(s) discussed, a brief description of the issues or problems found and recommendations for solutions to be implemented by the Contractor and a schedule designating dates when the Contractor will implement said work.

1.4 REFERENCES

A. ANSI A300 “Tree Care Operations - Tree, Shrub and Other Woody Plant Maintenance - Standard Practices,” latest edition.

B. ANSI Z133.1, “American National Standard for Arboricultural Operations – Pruning, Repairing, Maintaining, and Removing Trees and Cutting Brush – Safety Requirements,” latest edition.

C. “Integrated Pest Management Guide for Commercial Production and Maintenance of Trees and Shrubs,” published by Cornell University, Ithaca, NY, and available from the Distribution Center, Research Park, Cornell University, Ithaca, NY 14850. Telephone (607) 255-2080.

1.5 DEFINITIONS

A. Integrated Pest Management (IPM) Program: Pest management approach that uses current, comprehensive information on the life cycles of pests and their interaction with the environment in combination with available pest control methods, to manage pest damage by the most economical means, and with the least possible hazard to people, property, and the environment.

B. Root Flare: Also called "trunk flare." The area, at the base of the plant's stem or trunk, where the stem or trunk broadens to form roots; the area of transition between the root system and the stem or trunk.

C. Stem Girdling Roots: Roots that encircle the stems (trunks) of trees below the soil surface.

D. Surface Soil: Soil that is present at the top layer of the existing soil profile at the Project site. In undisturbed areas, the surface soil is typically topsoil; but in disturbed areas such as urban environments, the surface soil can be subsoil.

1.6 SUBMITTALS

A. Qualifications.

B. Documentation

1. Photography: Provide on a weekly basis at least three (3) color digital photographs taken from different angles to document conditions of each tree. Include a scale rod or other measuring device in each photograph. Include date and time stamps on each photograph.
2. Schedule: Provide a schedule for care, nutrient adjustments and control over the construction maintenance and post-restoration periods for review by the independent arborist and landscape architect.

C. Product Data: For each product indicated.

D. Samples: 1 lb sealed plastic bag, labeled with summary of test results; indicate source of material.

1. Imported Topsoil
2. Organic Mulch:

E. Product Certificates: For each type of manufactured product, from manufacturer, and complying with the following:

1. Manufacturer's certified analysis of standard products.
2. Analysis of other materials by a recognized laboratory made according to methods established by the Association of Official Analytical Chemists, where applicable.

F. Laboratory Test Reports: For both existing in-place surface soil and imported topsoil.

1. Furnish soil analysis determining baseline percentages of organic matter; gradation of sand, silt, and clay content; cation exchange capacity; sodium absorption ratio; deleterious material; pH; and mineral and plant-nutrient content of the soil.

a. Based upon the test results, provide recommendations for soil treatments and soil amendments to be incorporated. State recommendations in weight per 1000 sq. ft. (92.9 sq. m) or volume per cu. yd. (0.76 cu. m) for nitrogen, phosphorus, and potash nutrients and soil amendments to be added to produce satisfactory planting soil suitable for healthy, viable plants.
b. Report presence of problem salts, minerals, or heavy metals, including aluminum, arsenic, barium, cadmium, chromium, cobalt, lead, lithium, and vanadium. If such problem materials are present, provide additional recommendations for corrective action.

G. Arborist’s Weekly Site Inspection Reports.

H. Post-construction Monthly Maintenance Schedule.

1.7 QUALITY ASSURANCE

A. Tree Care Company: An established business entity with expertise in preservation and maintenance of mature trees in construction areas.

1. Professional Membership: Entity shall be an accredited member in good standing of the Tree Care Industry Association.
2. Personnel Certifications: Entity's field supervisor and personnel assigned to the Work shall include:

a. An ISA-certified arborist with current membership in New York State.
b. A Certified Tree Care Safety Professional
c. A NYS-licensed Pesticide Applicator with three (3) years’ experience in integrated pest management for commercial arboriculture.

B. Soil-Testing Laboratory Qualifications: An independent or university laboratory, recognized by the State Department of Agriculture, with the experience and capability to conduct the testing indicated and that specializes in types of tests to be performed.

C. Pre-installation Conference: Conduct conference at Project site.

1.8 DELIVERY, STORAGE, AND HANDLING

A. Packaged Materials: Deliver packaged materials in original, unopened containers showing weight, certified analysis, name and address of manufacturer, and indication of conformance with state and federal laws if applicable.

B. Bulk Materials: Not applicable.

1.9 PROJECT CONDITIONS

A. Storage: Do not stockpile demolition, construction or tree care materials within tree protection barrier or within root zones

B. Do not excavate within tree protection zones.

1.10 MAINTENANCE SERVICE

A. Maintenance During Construction: Maintain protected trees for duration of construction work. Provide construction phase maintenance until Substantial Completion.

B. Post-Construction Maintenance: Provide maintenance for 12-month following Substantial Completion. Refer to Article 3.7 requirements.

PART 2 - PRODUCTS

2.1 TEMPORARY TREE PROTECTION

A. Fencing: 4-Foot high plastic construction fencing constructed of high-density extruded and stretched polyethylene fabric with 2-inch (50-mm) maximum opening in pattern and supported by tubular or T-shape galvanized-steel posts spaced not more than 8 feet (2.4 m) apart. High-visibility orange color, non-fading.

2.2 AGGREGATES

A. ASTM C33 Sharp sand, uniformly graded.

2.3 ORGANIC SOIL AMENDMENTS

A. Compost: Well-composted, stable, and weed-free organic matter, pH range of 5.5 to 8; moisture content 35 to 55 percent by weight; 100 percent passing through 1-inch (25-mm) 3/4-inch (19-mm) 1/2-inch (13-mm) sieve; soluble salt content of 5 to 10 decisiemens/m; not exceeding 0.5 percent inert contaminants and free of substances toxic to plantings; and as follows:

1. Organic Matter Content: 50 to 60 percent of dry weight.
2. Feedstock: Agricultural, food, or industrial residuals; biosolids; yard trimmings; or source-separated or compostable mixed solid waste.

B. Sphagnum Peat: Partially decomposed sphagnum peat moss, finely divided or granular texture, with a pH range of 3.4 to 4.8.

C. Muck Peat: Partially decomposed moss peat, native peat, or reed-sedge peat, finely divided or of granular texture, with a pH range of 6 to 7.5, and having a water-absorbing capacity of 1100 to 2000 percent.

2.4 FERTILIZERS

A. Bone meal: Commercial, raw or steamed, finely ground; a minimum of 14 percent nitrogen and 10-20 percent phosphoric acid.

B. Superphosphate: Commercial, phosphate mixture, soluble; a minimum of 20 percent available phosphoric acid.

C. Commercial Fertilizer: Commercial-grade complete fertilizer of neutral character, consisting of fast- and slow-release nitrogen, 50 percent derived from natural organic sources of urea formaldehyde, phosphorous, and potassium in the following composition:

1. Composition: 1 lb/1000 sq. ft. of actual nitrogen, 4 percent phosphorous, and 2 percent potassium, by weight.
2. Composition: Nitrogen, phosphorous, and potassium in amounts recommended in soil reports from a qualified soil-testing laboratory.

D. Slow-Release Fertilizer: Granular or pelleted fertilizer consisting of 50 percent water-insoluble nitrogen, phosphorus, and potassium in the following composition:

1. Composition: 20 percent nitrogen, 10 percent phosphorous, and 10 percent potassium, by weight.
2. Composition: Nitrogen, phosphorous, and potassium in amounts recommended in soil reports from a qualified soil-testing laboratory.

E. Planting Tablets: Tightly compressed chip type, long-lasting, slow-release, commercial-grade planting fertilizer in tablet form. Tablets shall break down with soil bacteria, converting nutrients into a form that can be absorbed by plant roots.

1. Size: 5-gram 10-gram 21-gram tablets.
2. Nutrient Composition: 20 percent nitrogen, 10 percent phosphorous, and 5 percent potassium, by weight plus micronutrients.

F. Chelated Iron: Commercial-grade FeEDDHA for dicots and woody plants, and commercial-grade FeDTPA for ornamental grasses and monocots.

2.5 IMPORTED TOPSOIL – Not applicable.

2.6 MULCH

A. Shredded hardwood mulch: premium, screened commercial product, free of seeds, weeds, and deleterious matter.

2.7 GEOTEXTILE FABRIC

A. Nonwoven Geotextile Filter Fabric: Polypropylene or polyester fabric, 3 oz./sq. yd. minimum, composed of fibers formed into a stable network so that fibers retain their relative position. Fabric shall be inert to biological degradation and resist naturally-encountered chemicals, alkalis, and acids.

2.8 IRRIGATION BAGS

A. Basis of Design: 20 Gallon “Treegator” Drip Irrigation Bag, in double-bag setup, by Spectrum Products, Inc., Youngsville NY; www.treegator.com; or approved equal.

2.9 MISCELLANEOUS PRODUCTS

A. Anti-desiccant: Water-insoluble emulsion, permeable moisture retarder, film forming, suitable for use on tree species and variety. Deliver in original, sealed, and fully labeled containers and mix according to manufacturer's written instructions.

B. Drainage Gravel: Washed, sound crushed stone or gravel complying with ASTM D 448 for Size No. 8.

C. Mycorrhizal Fungi: Dry, granular inoculant containing at least 5300 spores per lb of vesicular-arbuscular mycorrhizal fungi and 95 million spores per lb of ectomycorrhizal fungi, 33 percent hydrogel, and a maximum of 5.5 percent inert material.

PART 3 - EXECUTION

3.1 COORDINATION

A. Coordinate root pruning with work under Section 02 41 00. Prune tree roots before beginning Selective Demolition.

3.2 PREPARATION

A. Baseline conditions: Before Division 02 Demolition work begins, submit soil samples for laboratory analysis to establish baseline profile of existing soil conditions.

3.3 ROOT PRUNING

A. Use a pneumatic spade to expose tree root systems within demolition area. Deploy pneumatic spade equipment according to standard arboricultural industry practices for controlled excavation in the vicinity of tree root systems.

1. Loosen and displace compacted soils surrounding roots; determine root locations, size and status.

B. Excavate using the pneumatic spade to expose root collar and flare. Prune girdling roots.

C. Prune protected trees roots only within limits of disturbance shown on the Drawings.

D. Backfill:

1. Upon completing root pruning work, vertically mulch entire root zone.

a. Use an earth auger or similar drill with a 2.5 inch diameter auger bit to drill product into soil to eight-inch depth on 18-inch centers.
b. Backfill augured cores with sand amended with mycorrhizal inoculants per inoculant manufacturer’s specifications.

2. Add further amendments to correct baseline soil structure, pH, N, P and K ratios on basis of approved nutrient control report.
3. Restore existing mulch layer over backfilled soils. If necessary, augment existing mulch with not more than two inches of shredded hardwood bark mulch.

E. Irrigation: Immediately irrigate aerated backfill; adjust existing irrigation lines as necessary to restore service. If existing irrigation is not available during construction provide temporary tree irrigation bags, with double-bag setup for each tree.

F. Temporary Cover: Cover area of exposed root system with non-woven geotextile fabric to prevent incidental infiltration of construction materials and debris. Place four-inch depth of drainage gravel mulch over geotextile fabric and maintain until items are removed for replanting work.

3.4 CROWN PRUNING AND REDUCTION

A. Reduce crown and prune tree limbs only as needed to accommodate new structure. Prune to maintain branching character and preserve shape and volume of existing canopies.

3.5 TEMPORARY TREE PROTECTION

A. Erect tree protection barriers per dimensions shown on the drawings and per Section 015390 Temporary Tree Protection to limit encroachment within root zones.

3.6 MAINTENANCE DURING CONSTRUCTION

A. Maintain temporary protection for duration of construction.

B. Inspect and monitor health of canopy, trunk and root systems.

C. Test soil on monthly basis and monitor changes in baseline conditions near construction activity.

1. Test soils to determine changes in baseline soil pH and nutrient availability. Test soils when damp and within 48 hours of watering. If there is evidence of change in baseline conditions, prepare an adjustment plan and amendment schedule for review.

D. Water root zones and adjust temporary irrigation bags

E. Wash tree canopies to remove accumulated dust from construction activities. Ensure that runoff does not contaminate surface soils.

1. Wash tree leaves to thoroughly remove construction dust within 24 hours of exposure. Do not allow dust residue to accumulate or harden.

a. ISA-certified Arborist shall prepare washing plan and product schedule for review.

F. Fill and maintain temporary irrigation bags. Increase frequency of refilling if trees are subject to heat stress or drought.

G. Perform corrective measures during maintenance as warranted and as directed by the independent arborist. Corrective measures shall include, but are not limited to, adjustments to protective barriers, additional irrigation, additional feeding and fertilizing to address stress, additional pruning.

3.7 POST-CONSTRUCTION MONITORING AND CARE

A. Provide a 12-month maintenance schedule to monitor trees and provide arboricultural care post-Substantial Completion.

B. Implement approved maintenance procedures. Care shall include, but is not limited to, monitoring trees on a monthly basis, soil sampling to determine available nutrient levels, additionally applying mycorrhizal inoculants to root zones, watering, fertilizing, and pruning.

C. Increase monitoring as necessary when observed conditions indicate the trees are additionally stressed as a result of exposure to masonry restoration work. Advise independent arborist of findings in writing and propose remedial measures for review. Implement approved measures as required.

3.8 CLEANUP, PROTECTION AND DISPOSAL

A. Remove drainage gravel and geotextile fabric temporary root cover for work under Section 32 93 00 Plants, and allow ground covers replanting.

B. Protect trees from construction operations. Maintain temporary tree protection until Substantial Completion. Treat, repair, or replace damaged plantings.

C. After installation and before Substantial Completion, remove surplus soil and waste material including excess subsoil, unsuitable soil, trash, and debris from Project site and legally dispose of them off Owner's property.

END OF SECTION 01 53 90

SECTION 01 60 00 - PRODUCT REQUIREMENTS

PART 1 GENERAL

1.01 SECTION INCLUDES

A. General product requirements.

B. Re-use of existing products.

C. Transportation, handling, storage and protection.

D. Product option requirements.

E. Substitution limitations and procedures.

F. Procedures for Owner-supplied products.

G. Maintenance materials, including extra materials, spare parts, tools, and software.

1.02 RELATED REQUIREMENTS

A. Document 00 21 13 - Instructions to Bidders: Product options and substitution procedures prior to bid date.

B. Section 01 40 00 - Quality Requirements: Product quality monitoring.

1.03 REFERENCE STANDARDS

A. 16 CFR 260 - Guides for the Use of Environmental Marketing Claims; Federal Trade Commission; current edition.

B. CAN/CSA Z809 - National Standard for Sustainable Forest Management; CSA International Inc.; 2008.

C. NEMA MG 1 - Motors and Generators; National Electrical Manufacturers Association; 2011.

D. NFPA 70 - National Electrical Code; National Fire Protection Association; Most Recent Edition Adopted by Authority Having Jurisdiction, Including All Applicable Amendments and Supplements.

1.04 SUBMITTALS

A. Proposed Products List: Submit list of major products proposed for use, with name of manufacturer, trade name, and model number of each product.
   1. Submit within 15 days after date of Agreement.
   2. For products specified only by reference standards, list applicable reference standards.

B. Product Data Submittals: Submit manufacturer's standard published data. Mark each copy to identify applicable products, models, options, and other data. Supplement manufacturers' standard data to provide information specific to this Project.

C. Shop Drawing Submittals: Prepared specifically for this Project; indicate utility and electrical characteristics, utility connection requirements, and location of utility outlets for service for functional equipment and appliances.

D. Sample Submittals: Illustrate functional and aesthetic characteristics of the product, with integral parts and attachment devices. Coordinate sample submittals for interfacing work.
   1. For selection from standard finishes, submit samples of the full range of the manufacturer's standard colors, textures, and patterns.

PART 2 PRODUCTS

2.01 EXISTING PRODUCTS

A. Do not use materials and equipment removed from existing premises unless specifically required or permitted by the Contract Documents.

B. Unforeseen historic items encountered remain the property of the Owner; notify Owner promptly upon discovery; protect, remove, handle, and store as directed by Owner.

C. Existing materials and equipment indicated to be removed, but not to be re-used, relocated, reinstalled, delivered to the Owner, or otherwise indicated as to remain the property of the Owner, become the property of the Contractor; remove from site.

D. Reused Products: Reused products include materials and equipment previously used in this or other construction, salvaged and refurbished as specified.

2.02 NEW PRODUCTS

A. Provide new products unless specifically required or permitted by the Contract Documents.

B. DO NOT USE products having any of the following characteristics:
   1. Made using or containing CFC's or HCFC's.
   2. Made of wood from newly cut old growth timber.
   3. Containing lead, cadmium, asbestos.

C. Provide interchangeable components of the same manufacture for components being replaced.

D. Motors: Refer to Section 22 05 13 - Common Motor Requirements for Plumbing Equipment, NEMA MG 1 Type. Specific motor type is specified in individual specification sections.

E. Wiring Terminations: Provide terminal lugs to match branch circuit conductor quantities, sizes, and materials indicated. Size terminal lugs to NFPA 70, include lugs for terminal box.

F. Cord and Plug: Provide minimum 6 foot cord and plug including grounding connector for connection to electric wiring system. Cord of longer length is specified in individual specification sections.

2.03 PRODUCT OPTIONS

A. Products Specified by Reference Standards or by Description Only: Use any product meeting those standards or description.

B. Products Specified by Naming One or More Manufacturers: Use a product of one of the manufacturers named and meeting specifications, no options or substitutions allowed.

C. Products Specified by Naming One or More Manufacturers with a Provision for Substitutions: Submit a request for substitution for any manufacturer not named.

2.04 MAINTENANCE MATERIALS

A. Furnish extra materials, spare parts, tools, and software of types and in quantities specified in individual specification sections.

B. Deliver to Project site; obtain receipt prior to final payment.

PART 3 EXECUTION

3.01 SUBSTITUTION PROCEDURES

A. Instructions to Bidders specify time restrictions for submitting requests for substitutions during the bidding period. Comply with requirements specified in this section.

B. Architect will consider requests for substitutions only within 30 days after date of Agreement.

C. Substitutions may be considered when a product becomes unavailable through no fault of the Contractor.

D. Document each request with complete data substantiating compliance of proposed substitution with Contract Documents.

E. A request for substitution constitutes a representation that the submitter:
   1. Has investigated proposed product and determined that it meets or exceeds the quality level of the specified product.
   2. Will provide the same warranty for the substitution as for the specified product.
   3. Will coordinate installation and make changes to other Work that may be required for the Work to be complete with no additional cost to Owner.
   4. Waives claims for additional costs or time extension that may subsequently become apparent.

5. Will reimburse Owner and Architect for review or redesign services associated with re-approval by authorities.

F. Substitutions will not be considered when they are indicated or implied on shop drawing or product data submittals, without separate written request, or when acceptance will require revision to the Contract Documents.

G. Substitution Submittal Procedure:
1. Submit three copies of request for substitution for consideration. Limit each request to one proposed substitution.
2. Submit shop drawings, product data, and certified test results attesting to the proposed product equivalence. Burden of proof is on proposer.
3. Architect will notify Contractor in writing of decision to accept or reject request.

3.02 OWNER-SUPPLIED PRODUCTS

A. See Section 01 10 00 for identification of Owner-supplied products.

B. Owner's Responsibilities:
1. Arrange for and deliver Owner reviewed shop drawings, product data, and samples, to Contractor.
2. Arrange and pay for product delivery to site.
3. On delivery, inspect products jointly with Contractor.
4. Submit claims for transportation damage and replace damaged, defective, or deficient items.
5. Arrange for manufacturers' warranties, inspections, and service.

C. Contractor's Responsibilities:
1. Review Owner reviewed shop drawings, product data, and samples.
2. Receive and unload products at site; inspect for completeness or damage jointly with Owner.
3. Handle, store, install and finish products.
4. Repair or replace items damaged after receipt.

3.03 TRANSPORTATION AND HANDLING

A. Package products for shipment in manner to prevent damage; for equipment, package to avoid loss of factory calibration.

B. If special precautions are required, attach instructions prominently and legibly on outside of packaging.

C. Coordinate schedule of product delivery to designated prepared areas in order to minimize site storage time and potential damage to stored materials.

D. Transport and handle products in accordance with manufacturer's instructions.

E. Transport materials in covered trucks to prevent contamination of product and littering of surrounding areas.

F. Promptly inspect shipments to ensure that products comply with requirements, quantities are correct, and products are undamaged.

G. Provide equipment and personnel to handle products by methods to prevent soiling, disfigurement, or damage, and to minimize handling.

H. Arrange for the return of packing materials, such as wood pallets, where economically feasible.

3.04 STORAGE AND PROTECTION

A. Designate receiving/storage areas for incoming products so that they are delivered according to installation schedule and placed convenient to work area in order to minimize waste due to excessive materials handling and misapplication.

B. Store and protect products in accordance with manufacturers' instructions.

C. Store with seals and labels intact and legible.

D. Store sensitive products in weather tight, climate controlled, enclosures in an environment favorable to product.

E. For exterior storage of fabricated products, place on sloped supports above ground.

F. Protect products from damage or deterioration due to construction operations, weather, precipitation, humidity, temperature, sunlight and ultraviolet light, dirt, dust, and other contaminants.

G. Comply with manufacturer's warranty conditions, if any.

H. Cover products subject to deterioration with impervious sheet covering. Provide ventilation to prevent condensation and degradation of products.

I. Prevent contact with material that may cause corrosion, discoloration, or staining.

J. Provide equipment and personnel to store products by methods to prevent soiling, disfigurement, or damage.

K. Arrange storage of products to permit access for inspection. Periodically inspect to verify products are undamaged and are maintained in acceptable condition.

END OF SECTION

SECTION 01 70 00 - EXECUTION AND CLOSEOUT REQUIREMENTS

PART 1 GENERAL

1.01 SECTION INCLUDES

A. Examination, preparation, and general installation procedures.

B. Requirements for alterations work, including selective demolition, except removal, disposal, and/or remediation of hazardous materials and toxic substances.

C. Pre-installation meetings.

D. Cutting and patching.

E. Surveying for laying out the work.

F. Cleaning and protection.

G. Starting of systems and equipment.

H. Demonstration and instruction of Owner personnel.

I. Closeout procedures, including Contractor's Correction Punch List, except payment procedures.

J. General requirements for maintenance service.

1.02 RELATED REQUIREMENTS

A. Section 01 10 00 - Summary: Limitations on working in existing building; continued occupancy; work sequence; identification of salvaged and relocated materials.

B. Section 01 30 00 - Administrative Requirements: Submittals procedures, Electronic document submittal service.

C. Section 01 40 00 - Quality Requirements: Testing and inspection procedures.

D. Section 01 50 00 - Temporary Facilities and Controls: Temporary exterior enclosures.

E. Section 01 50 00 - Temporary Facilities and Controls: Temporary interior partitions.

F. Section 01 78 00 - Closeout Submittals: Project record documents, operation and maintenance data, warranties and bonds.

G. Section 07 84 00 - Firestopping.

H. Individual Product Specification Sections:
   1. Advance notification to other sections of openings required in work of those sections.
   2. Limitations on cutting structural members.

1.03 REFERENCE STANDARDS

A. NFPA 241 - Standard for Safeguarding Construction, Alteration, and Demolition Operations; 2013.

1.04 SUBMITTALS

A. See Section 01 30 00 - Administrative Requirements, for submittal procedures.

B. Survey work: Submit name, address, and telephone number of Surveyor before starting survey work.
   1. On request, submit documentation verifying accuracy of survey work.
   2. Submit a copy of site drawing signed by the Land Surveyor, that the elevations and locations of the work are in conformance with Contract Documents.
   3. Submit surveys and survey logs for the project record.
   4. Submit certified layout survey of completed Second Floor level bearing plates and structure to Modular Units Contractor. Include horizontal dimensions, sqareness, elevations.

C. Cutting and Patching: Submit written request in advance of cutting or alteration that affects:
   1. Structural integrity of any element of Project.
   2. Integrity of weather exposed or moisture resistant element.

3. Efficiency, maintenance, or safety of any operational element.
4. Visual qualities of sight exposed elements.
5. Work of Owner or separate Contractor.
6. Include in request:
    a. Identification of Project.
    b. Location and description of affected work.
    c. Necessity for cutting or alteration.
    d. Description of proposed work and products to be used.
    e. Alternatives to cutting and patching.
    f. Effect on work of Owner or separate Contractor.
    g. Written permission of affected separate Contractor.
    h. Date and time work will be executed.

D. Project Record Documents: Accurately record actual locations of capped and active utilities.

1.05 QUALIFICATIONS

A. For demolition work, employ a firm specializing in the type of work required.
    1. Minimum of three years of documented experience.

B. For survey work, employ a land surveyor registered in New York State and acceptable to Architect. Submit evidence of Surveyor's Errors and Omissions insurance coverage in the form of an Insurance Certificate.

C. For field engineering, employ a professional engineer of the discipline required for specific service on Project, licensed in New York State.

D. For design of temporary shoring and bracing, employ a Professional Engineer experienced in design of this type of work and licensed in New York State.

1.06 PROJECT CONDITIONS

A. Use of explosives is not permitted.

B. Grade site to drain. Maintain excavations free of water. Provide, operate, and maintain pumping equipment.

C. Protect site from puddling or running water. Provide water barriers as required to protect site from soil erosion.

D. Ventilate enclosed areas to assist cure of materials, to dissipate humidity, and to prevent accumulation of dust, fumes, vapors, or gases.

E. Dust Control: Execute work by methods to minimize raising dust from construction operations. Provide positive means to prevent air-borne dust from dispersing into atmosphere and over adjacent property.
    1. Provide dust-proof enclosures to prevent entry of dust generated outdoors.
    2. Provide dust-proof barriers between construction areas and areas continuing to be occupied by Owner.

F. Erosion and Sediment Control: Plan and execute work by methods to control surface drainage from cuts and fills, from borrow and waste disposal areas. Prevent erosion and sedimentation.
    1. Minimize amount of bare soil exposed at one time.
    2. Provide temporary measures such as berms, dikes, and drains, to prevent water flow.
    3. Construct fill and waste areas by selective placement to avoid erosive surface silts or clays.
    4. Periodically inspect earthwork to detect evidence of erosion and sedimentation; promptly apply corrective measures.

G. Noise Control: Provide methods, means, and facilities to minimize noise produced by construction operations.
    1. At All Times: Excessively noisy tools and operations will not be tolerated inside the building at any time of day; excessively noisy includes jackhammers.
    2. Outdoors: Limit conduct of especially noisy exterior work to the hours of 8 am to 5 pm.

H. Pest and Rodent Control: Provide methods, means, and facilities to prevent pests and insects from damaging the work.
   1. Pest Control Service: Weekly treatments.

I. Rodent Control: Provide methods, means, and facilities to prevent rodents from accessing or invading premises.

J. Pollution Control: Provide methods, means, and facilities to prevent contamination of soil, water, and atmosphere from discharge of noxious, toxic substances, and pollutants produced by construction operations. Comply with federal, state, and local regulations.

1.07 COORDINATION

A. See Section 01 10 00 for occupancy-related requirements.

B. Coordinate scheduling, submittals, and work of the various sections of the Project Manual to ensure efficient and orderly sequence of installation of interdependent construction elements, with provisions for accommodating items installed later.

C. Notify affected utility companies and comply with their requirements.

D. Verify that utility requirements and characteristics of new operating equipment are compatible with building utilities. Coordinate work of various sections having interdependent responsibilities for installing, connecting to, and placing in service, such equipment.

E. Coordinate space requirements, supports, and installation of mechanical and electrical work that are indicated diagrammatically on Drawings. Follow routing shown for pipes, ducts, and conduit, as closely as practicable; place runs parallel with lines of building. Utilize spaces efficiently to maximize accessibility for other installations, for maintenance, and for repairs.

F. In finished areas except as otherwise indicated, conceal pipes, ducts, and wiring within the construction. Coordinate locations of fixtures and outlets with finish elements.

G. Coordinate completion and clean-up of work of separate sections.

H. After Owner occupancy of premises, coordinate access to site for correction of defective work and work not in accordance with Contract Documents, to minimize disruption of Owner's activities.

PART 2 PRODUCTS

2.01 PATCHING MATERIALS

A. New Materials: As specified in product sections; match existing products and work for patching and extending work.

B. Type and Quality of Existing Products: Determine by inspecting and testing products where necessary, referring to existing work as a standard.

C. Product Substitution: For any proposed change in materials, submit request for substitution described in Section 01 60 00 - Product Requirements.

PART 3 EXECUTION

3.01 EXAMINATION

A. Verify that existing site conditions and substrate surfaces are acceptable for subsequent work. Start of work means acceptance of existing conditions.

B. Verify that existing substrate is capable of structural support or attachment of new work being applied or attached.

C. Examine and verify specific conditions described in individual specification sections.

D. Take field measurements before confirming product orders or beginning fabrication, to minimize waste due to over-ordering or misfabrication.

E. Verify that utility services are available, of the correct characteristics, and in the correct locations.

F. Prior to Cutting: Examine existing conditions prior to commencing work, including elements subject to damage or movement during cutting and patching. After uncovering existing work, assess conditions affecting performance of work. Beginning of cutting or patching means acceptance of existing conditions.

3.02 PREPARATION

A. Clean substrate surfaces prior to applying next material or substance.

B. Seal cracks or openings of substrate prior to applying next material or substance.

C. Apply manufacturer required or recommended substrate primer, sealer, or conditioner prior to applying any new material or substance in contact or bond.

3.03 PREINSTALLATION MEETINGS AND SURVEYS

A. When required in individual specification sections, convene a preinstallation meeting at the site prior to commencing work of the section.

B. Require attendance of parties directly affecting, or affected by, work of the specific section.

C. Notify Architect four days in advance of meeting date.

D. Prepare agenda and preside at meeting:
   1. Review conditions of examination, preparation and installation procedures.
   2. Review coordination with related work.

E. Record minutes and distribute copies within two days after meeting to participants, with two copies to Architect, Owner, participants, and those affected by decisions made.

F. Preconstruction Survey: Prior to work on the site, produce a record survey of the surrounding building walls, retaining walls, fences and other improvements adjacent to the site property lines.
   1. Provide photographs of entire perimeter of site in sufficient detail to record crevaces, cracks, holes and defects to masonry and bedrock.
   2. Provide elevation drawings with notations of crevaces, cracks, holes and other defects.
   3. Provide plan survey of public sidewalk and areas of pavement within property lines.
   4. Submit record preconstruction survey to Owner and Architect prior to clearing and excavating site.

3.04 LAYING OUT THE WORK

A. Verify locations of survey control points prior to starting work.

B. Promptly notify Architect of any discrepancies discovered.

C. Owner will locate and protect survey control and reference points.

D. Contractor shall locate and protect survey control and reference points.

E. Control datum for survey is that established by Owner provided survey.

F. Control datum for survey is that indicated on Drawings.

G. Control datum for survey is _____.

H. Protect survey control points prior to starting site work; preserve permanent reference points during construction.

I. Promptly report to Architect the loss or destruction of any reference point or relocation required because of changes in grades or other reasons.

J. Replace dislocated survey control points based on original survey control. Make no changes without prior written notice to Architect.

K. Utilize recognized engineering survey practices.

L. Establish a minimum of two permanent bench marks on site, referenced to established control points. Record locations, with horizontal and vertical data, on project record documents.

M. Establish elevations, lines and levels. Locate and lay out by instrumentation and similar appropriate means:

1. Site improvements including pavements; stakes for grading, fill and topsoil placement; utility locations, slopes, and invert elevations.
2. Grid or axis for structures.
3. Building foundation, column locations, ground floor elevations.

N. Maintain a complete and accurate log of control and survey work as it progresses.

O. On completion of foundation walls and major site improvements, prepare a certified survey illustrating dimensions, locations, angles, and elevations of construction and site work.

3.05 GENERAL INSTALLATION REQUIREMENTS

A. Install products as specified in individual sections, in accordance with manufacturer's instructions and recommendations, and so as to avoid waste due to necessity for replacement.

B. Make vertical elements plumb and horizontal elements level, unless otherwise indicated.

C. Install equipment and fittings plumb and level, neatly aligned with adjacent vertical and horizontal lines, unless otherwise indicated.

D. Make consistent texture on surfaces, with seamless transitions, unless otherwise indicated.

E. Make neat transitions between different surfaces, maintaining texture and appearance.

3.06 ALTERATIONS

A. Drawings showing existing construction and utilities are based on casual field observation and existing record documents only.
1. Verify that construction and utility arrangements are as shown.
2. Report discrepancies to Architect before disturbing existing installation.
3. Beginning of alterations work constitutes acceptance of existing conditions.

B. Remove existing work as indicated and as required to accomplish new work.
1. Remove items indicated on drawings.
2. Relocate items indicated on drawings.
3. Where new surface finishes are to be applied to existing work, perform removals, patch, and prepare existing surfaces as required to receive new finish; remove existing finish if necessary for successful application of new finish.
4. Where new surface finishes are not specified or indicated, patch holes and damaged surfaces to match adjacent finished surfaces as closely as possible.

C. Services (Including but not limited to HVAC, Plumbing, Fire Protection, Electrical, Telecommunications, and Electronic Saftey and Security): Remove, relocate, and extend existing systems to accommodate new construction.
1. Maintain existing active systems that are to remain in operation; maintain access to equipment and operational components; if necessary, modify installation to allow access or provide access panel.
2. Where existing systems or equipment are not active and Contract Documents require reactivation, put back into operational condition; repair supply, distribution, and equipment as required.
3. Where existing active systems serve occupied facilities but are to be replaced with new services, maintain existing systems in service until new systems are complete and ready for service.
    a. Disable existing systems only to make switchovers and connections; minimize duration of outages.
    b. Provide temporary connections as required to maintain existing systems in service.
4. Verify that abandoned services serve only abandoned facilities.
5. Remove abandoned pipe, ducts, conduits, and equipment; remove back to source of supply where possible, otherwise cap stub and tag with identification; patch holes left by removal using materials specified for new construction.

D. Protect existing work to remain.
1. Prevent movement of structure; provide shoring and bracing if necessary.
2. Perform cutting to accomplish removals neatly and as specified for cutting new work.

3. Repair adjacent construction and finishes damaged during removal work.

E. Adapt existing work to fit new work: Make as neat and smooth transition as possible.

F. Patching: Where the existing surface is not indicated to be refinished, patch to match the surface finish that existed prior to cutting. Where the surface is indicated to be refinished, patch so that the substrate is ready for the new finish.

G. Refinish existing surfaces as indicated:
1. Where rooms or spaces are indicated to be refinished, refinish all visible existing surfaces to remain to the specified condition for each material, with a neat transition to adjacent finishes.
2. If mechanical or electrical work is exposed accidentally during the work, re-cover and refinish to match.

H. Clean existing systems and equipment.

I. Remove demolition debris and abandoned items from alterations areas and dispose of off-site; do not burn or bury.

J. Do not begin new construction in alterations areas before demolition is complete.

K. Comply with all other applicable requirements of this section.

3.07 CUTTING AND PATCHING

A. Whenever possible, execute the work by methods that avoid cutting or patching.

B. See Alterations article above for additional requirements.

C. Perform whatever cutting and patching is necessary to:
1. Complete the work.
2. Fit products together to integrate with other work.
3. Provide openings for penetration of mechanical, electrical, and other services.
4. Match work that has been cut to adjacent work.
5. Repair areas adjacent to cuts to required condition.
6. Repair new work damaged by subsequent work.
7. Remove samples of installed work for testing when requested.
8. Remove and replace defective and non-conforming work.

D. Execute cutting and patching including excavation and fill to complete the work, to uncover work in order to install improperly sequenced work, to remove and replace defective or non-conforming work, to remove samples of installed work for testing when requested, to provide openings in the work for penetration of mechanical and electrical work, to execute patching to complement adjacent work, and to fit products together to integrate with other work.

E. Execute work by methods that avoid damage to other work and that will provide appropriate surfaces to receive patching and finishing. In existing work, minimize damage and restore to original condition.

F. Employ original installer to perform cutting for weather exposed and moisture resistant elements, and sight exposed surfaces.

G. Cut rigid materials using masonry saw or core drill. Pneumatic tools not allowed without prior approval.

H. Restore work with new products in accordance with requirements of Contract Documents.

I. Fit work air tight to pipes, sleeves, ducts, conduit, and other penetrations through surfaces.

J. At penetrations of fire rated walls, partitions, ceiling, or floor construction, completely seal voids with fire rated material in accordance with Section 07 84 00, to full thickness of the penetrated element.

K. Patching:
1. Finish patched surfaces to match finish that existed prior to patching. On continuous surfaces, refinish to nearest intersection or natural break. For an assembly, refinish entire unit.

2. Match color, texture, and appearance.
3. Repair patched surfaces that are damaged, lifted, discolored, or showing other imperfections due to patching work. If defects are due to condition of substrate, repair substrate prior to repairing finish.

3.08 PROGRESS CLEANING

A. Maintain areas free of waste materials, debris, and rubbish. Maintain site in a clean and orderly condition.

B. Remove debris and rubbish from pipe chases, plenums, attics, crawl spaces, and other closed or remote spaces, prior to enclosing the space.

C. Broom and vacuum clean interior areas prior to start of surface finishing, and continue cleaning to eliminate dust.

D. Collect and remove waste materials, debris, and trash/rubbish from site periodically and dispose off-site; do not burn or bury.

3.09 PROTECTION OF INSTALLED WORK

A. Protect installed work from damage by construction operations.

B. Provide special protection where specified in individual specification sections.

C. Provide temporary and removable protection for installed products. Control activity in immediate work area to prevent damage.

D. Provide protective coverings at walls, projections, jambs, sills, and soffits of openings.

E. Protect finished floors, stairs, and other surfaces from traffic, dirt, wear, damage, or movement of heavy objects, by protecting with durable sheet materials.

F. Prohibit traffic or storage upon waterproofed or roofed surfaces. If traffic or activity is necessary, obtain recommendations for protection from waterproofing or roofing material manufacturer.

G. Remove protective coverings when no longer needed; reuse or recycle plastic coverings if possible.

3.10 SYSTEM STARTUP

A. Coordinate schedule for start-up of various equipment and systems.

B. Verify that each piece of equipment or system has been checked for proper lubrication, drive rotation, belt tension, control sequence, and for conditions that may cause damage.

C. Verify tests, meter readings, and specified electrical characteristics agree with those required by the equipment or system manufacturer.

D. Verify that wiring and support components for equipment are complete and tested.

E. Execute start-up under supervision of applicable Contractor personnel and manufacturer's representative in accordance with manufacturers' instructions.

F. When specified in individual specification Sections, require manufacturer to provide authorized representative to be present at site to inspect, check, and approve equipment or system installation prior to start-up, and to supervise placing equipment or system in operation.

G. Submit a written report that equipment or system has been properly installed and is functioning correctly.

3.11 DEMONSTRATION AND INSTRUCTION

A. Demonstrate operation and maintenance of products to Owner's personnel two weeks prior to date of Substantial Completion.

B. Demonstrate start-up, operation, control, adjustment, trouble-shooting, servicing, maintenance, and shutdown of each item of equipment at scheduled time, at equipment location.

C. For equipment or systems requiring seasonal operation, perform demonstration for other season within six months.

D. Provide a qualified person who is knowledgeable about the Project to perform demonstration and instruction of owner personnel.

E. Utilize operation and maintenance manuals as basis for instruction. Review contents of manual with Owner's personnel in detail to explain all aspects of operation and maintenance.

F. Prepare and insert additional data in operations and maintenance manuals when need for additional data becomes apparent during instruction.

G. The amount of time required for instruction on each item of equipment and system is that specified in individual sections.

3.12 ADJUSTING

A. Adjust operating products and equipment to ensure smooth and unhindered operation.

3.13 FINAL CLEANING

A. Execute final cleaning after Substantial Completion but before making final application for payment.
   1. Clean areas to be occupied by Owner prior to final completion before Owner occupancy.

B. Use cleaning materials that are nonhazardous.

C. Clean interior and exterior glass, surfaces exposed to view; remove temporary labels, stains and foreign substances, polish transparent and glossy surfaces,

D. Clean equipment and fixtures to a sanitary condition with cleaning materials appropriate to the surface and material being cleaned.

E. Remove all labels that are not permanent. Do not paint or otherwise cover fire test labels or nameplates on mechanical and electrical equipment.

F. Clean equipment and fixtures to a sanitary condition with cleaning materials appropriate to the surface and material being cleaned.

G. Clean filters of operating equipment.

H. Clean debris from roofs, area drains, and drainage systems.

I. Clean site; sweep paved areas, rake clean landscaped surfaces.

J. Remove waste, surplus materials, trash/rubbish, and construction facilities from the site; dispose of in legal manner; do not burn or bury.

3.14 CLOSEOUT PROCEDURES

A. Make submittals that are required by governing or other authorities.
   1. Provide copies to Architect and Owner.

B. Accompany Project Coordinator on preliminary inspection to determine items to be listed for completion or correction in the Contractor's Correction Punch List for Contractor's Notice of Substantial Completion.

C. Notify Architect when work is considered ready for Architect's Substantial Completion inspection.

D. Submit written certification containing Contractor's Correction Punch List, that Contract Documents have been reviewed, work has been inspected, and that work is complete in accordance with Contract Documents and ready for Architect's Substantial Completion inspection.

E. Owner will occupy all of the building as specified in Section 01 10 00.

F. Conduct Substantial Completion inspection and create Final Correction Punch List containing Architect's and Contractor's comprehensive list of items identified to be completed or corrected and submit to Architect.

G. Correct items of work listed in Final Correction Punch List and comply with requirements for access to Owner-occupied areas.

H. Accompany Project Coordinator on Contractor's preliminary final inspection.

I. Notify Architect when work is considered finally complete and ready for Architect's Substantial Completion final inspection.

J. Complete items of work determined by Architect listed in executed Certificate of Substantial Completion.

3.15 MAINTENANCE

A. Provide service and maintenance of components indicated in specification sections.

B. Maintenance Period: As indicated in specification sections or, if not indicated, not less than one year from the Date of Substantial Completion or the length of the specified warranty, whichever is longer.

C. Furnish service and maintenance of components indicated in specification sections for one year from date of Substantial Completion.

D. Examine system components at a frequency consistent with reliable operation. Clean, adjust, and lubricate as required.

E. Include systematic examination, adjustment, and lubrication of components. Repair or replace parts whenever required. Use parts produced by the manufacturer of the original component.

F. Maintenance service shall not be assigned or transferred to any agent or subcontractor without prior written consent of the Owner.

END OF SECTION

SECTION 01 78 00 - CLOSEOUT SUBMITTALS

PART 1 GENERAL

1.01 SECTION INCLUDES

A. Project Record Documents.

B. Operation and Maintenance Data.

C. Warranties and bonds.

1.02 RELATED REQUIREMENTS

A. Section 00 72 00 - General Conditions: Performance bond and labor and material payment bonds, warranty, and correction of work.

B. Section 01 30 00 - Administrative Requirements: Submittals procedures, shop drawings, product data, and samples.

C. Section 01 70 00 - Execution and Closeout Requirements: Contract closeout procedures.

D. Individual Product Sections: Specific requirements for operation and maintenance data.

E. Individual Product Sections: Warranties required for specific products or Work.

1.03 SUBMITTALS

A. Project Record Documents: Submit documents to Architect with claim for final Application for Payment.

B. Operation and Maintenance Data:
   1. Submit two copies of preliminary draft or proposed formats and outlines of contents before start of Work. Architect will review draft and return one copy with comments.
   2. For equipment, or component parts of equipment put into service during construction and operated by Owner, submit completed documents within ten days after acceptance.
   3. Submit one copy of completed documents 15 days prior to final inspection. This copy will be reviewed and returned after final inspection, with Architect comments. Revise content of all document sets as required prior to final submission.
   4. Submit two sets of revised final documents in final form within 10 days after final inspection.

C. Warranties and Bonds:
   1. For equipment or component parts of equipment put into service during construction with Owner's permission, submit documents within 10 days after acceptance.
   2. Make other submittals within 10 days after Date of Substantial Completion, prior to final Application for Payment.
   3. For items of Work for which acceptance is delayed beyond Date of Substantial Completion, submit within 10 days after acceptance, listing the date of acceptance as the beginning of the warranty period.

PART 2 PRODUCTS - NOT USED

PART 3 EXECUTION

3.01 PROJECT RECORD DOCUMENTS

A. Maintain on site one set of the following record documents; record actual revisions to the Work:
   1. Drawings.
   2. Specifications.
   3. Addenda.
   4. Change Orders and other modifications to the Contract.
   5. Reviewed shop drawings, product data, and samples.
   6. Manufacturer's instruction for assembly, installation, and adjusting.

B. Ensure entries are complete and accurate, enabling future reference by Owner.

C. Store record documents separate from documents used for construction.

D. Record information concurrent with construction progress.

E. Specifications: Legibly mark and record at each product section description of actual products installed, including the following:
   1. Manufacturer's name and product model and number.
   2. Product substitutions or alternates utilized.
   3. Changes made by Addenda and modifications.

F. Record Drawings and Shop Drawings: Legibly mark each item to record actual construction including:
   1. Measured depths of foundations in relation to finish first floor datum.
   2. Measured horizontal and vertical locations of underground utilities and appurtenances, referenced to permanent surface improvements.
   3. Measured locations of internal utilities and appurtenances concealed in construction, referenced to visible and accessible features of the Work.
   4. Field changes of dimension and detail.
   5. Details not on original Contract drawings.

3.02 OPERATION AND MAINTENANCE DATA

A. Source Data: For each product or system, list names, addresses and telephone numbers of Subcontractors and suppliers, including local source of supplies and replacement parts.

B. Product Data: Mark each sheet to clearly identify specific products and component parts, and data applicable to installation. Delete inapplicable information.

C. Drawings: Supplement product data to illustrate relations of component parts of equipment and systems, to show control and flow diagrams. Do not use Project Record Documents as maintenance drawings.

D. Typed Text: As required to supplement product data. Provide logical sequence of instructions for each procedure, incorporating manufacturer's instructions.

3.03 OPERATION AND MAINTENANCE DATA FOR MATERIALS AND FINISHES

A. For Each Product, Applied Material, and Finish:
   1. Product data, with catalog number, size, composition, and color and texture designations.
   2. Information for re-ordering custom manufactured products.

B. Instructions for Care and Maintenance: Manufacturer's recommendations for cleaning agents and methods, precautions against detrimental cleaning agents and methods, and recommended schedule for cleaning and maintenance.

C. Moisture protection and weather-exposed products: Include product data listing applicable reference standards, chemical composition, and details of installation. Provide recommendations for inspections, maintenance, and repair.

D. Additional information as specified in individual product specification sections.

E. Where additional instructions are required, beyond the manufacturer's standard printed instructions, have instructions prepared by personnel experienced in the operation and maintenance of the specific products.

F. Provide a listing in Table of Contents for design data, with tabbed fly sheet and space for insertion of data.

3.04 OPERATION AND MAINTENANCE DATA FOR EQUIPMENT AND SYSTEMS

A. For Each Item of Equipment and Each System:
   1. Description of unit or system, and component parts.
   2. Identify function, normal operating characteristics, and limiting conditions.
   3. Include performance curves, with engineering data and tests.
   4. Complete nomenclature and model number of replaceable parts.

B. Where additional instructions are required, beyond the manufacturer's standard printed instructions, have instructions prepared by personnel experienced in the operation and maintenance of the specific products.

C. Panelboard Circuit Directories: Provide electrical service characteristics, controls, and communications; typed.

D. Include color coded wiring diagrams as installed.

E. Operating Procedures: Include start-up, break-in, and routine normal operating instructions and sequences. Include regulation, control, stopping, shut-down, and emergency instructions. Include summer, winter, and any special operating instructions.

F. Maintenance Requirements: Include routine procedures and guide for preventative maintenance and trouble shooting; disassembly, repair, and reassembly instructions; and alignment, adjusting, balancing, and checking instructions.

G. Provide servicing and lubrication schedule, and list of lubricants required.

H. Include manufacturer's printed operation and maintenance instructions.

I. Include sequence of operation by controls manufacturer.

J. Provide original manufacturer's parts list, illustrations, assembly drawings, and diagrams required for maintenance.

K. Provide control diagrams by controls manufacturer as installed.

L. Provide Contractor's coordination drawings, with color coded piping diagrams as installed.

M. Provide charts of valve tag numbers, with location and function of each valve, keyed to flow and control diagrams.

N. Provide list of original manufacturer's spare parts, current prices, and recommended quantities to be maintained in storage.

O. Include test and balancing reports.

P. Additional Requirements: As specified in individual product specification sections.

3.05 ASSEMBLY OF OPERATION AND MAINTENANCE MANUALS

A. Assemble operation and maintenance data into durable manuals for Owner's personnel use, with data arranged in the same sequence as, and identified by, the specification sections.

B. Where systems involve more than one specification section, provide separate tabbed divider for each system.

C. Prepare instructions and data by personnel experienced in maintenance and operation of described products.

D. Prepare data in the form of an instructional manual.

E. Binders: Commercial quality, 8-1/2 by 11 inch three D side ring binders with durable plastic covers; 2 inch maximum ring size. When multiple binders are used, correlate data into related consistent groupings.

F. Cover: Identify each binder with typed or printed title OPERATION AND MAINTENANCE INSTRUCTIONS; identify title of Project; identify subject matter of contents.

G. Project Directory: Title and address of Project; names, addresses, and telephone numbers of Architect, Consultants, Contractor and subcontractors, with names of responsible parties.

H. Tables of Contents: List every item separated by a divider, using the same identification as on the divider tab; where multiple volumes are required, include all volumes Tables of Contents in each volume, with the current volume clearly identified.

I. Dividers: Provide tabbed dividers for each separate product and system; identify the contents on the divider tab; immediately following the divider tab include a description of product and major component parts of equipment.

J. Text: Manufacturer's printed data, or typewritten data on 24 pound paper.

K. Drawings: Provide with reinforced punched binder tab. Bind in with text; fold larger drawings to size of text pages.

L. Arrange content by systems under section numbers and sequence of Table of Contents of this Project Manual.

M. Contents: Prepare a Table of Contents for each volume, with each product or system description identified, in three parts as follows:
   1. Part 1: Directory, listing names, addresses, and telephone numbers of Architect, Contractor, Subcontractors, and major equipment suppliers.
   2. Part 2: Operation and maintenance instructions, arranged by system and subdivided by specification section. For each category, identify names, addresses, and telephone numbers of Subcontractors and suppliers. Identify the following:
      a. Significant design criteria.
      b. List of equipment.
      c. Parts list for each component.
      d. Operating instructions.
      e. Maintenance instructions for equipment and systems.
      f. Maintenance instructions for special finishes, including recommended cleaning methods and materials, and special precautions identifying detrimental agents.
   3. Part 3: Project documents and certificates, including the following:
      a. Shop drawings and product data.
      b. Air and water balance reports.
      c. Certificates.
      d. Photocopies of warranties and bonds.

N. Provide a listing in Table of Contents for design data, with tabbed dividers and space for insertion of data.

O. Table of Contents: Provide title of Project; names, addresses, and telephone numbers of Architect, Consultants, and Contractor with name of responsible parties; schedule of products and systems, indexed to content of the volume.

3.06 WARRANTIES AND BONDS

A. Obtain warranties and bonds, executed in duplicate by responsible Subcontractors, suppliers, and manufacturers, within 10 days after completion of the applicable item of work. Except for items put into use with Owner's permission, leave date of beginning of time of warranty until the Date of Substantial completion is determined.

B. Verify that documents are in proper form, contain full information, and are notarized.

C. Co-execute submittals when required.

D. Retain warranties and bonds until time specified for submittal.

E. Include originals of each in operation and maintenance manuals, indexed separately on Table of Contents.

END OF SECTION

SECTION 02 41 00 - SELECTIVE DEMOLITION

PART 1 GENERAL

1.01 SECTION INCLUDES

A. Building demolition excluding removal of hazardous materials and toxic substances.

B. Selective demolition of built site elements.

C. Selective demolition of building elements for alteration purposes.

1.02 RELATED REQUIREMENTS

A. Section 01 10 00 - Summary: Limitations on Contractor's use of site and premises.

B. Section 01 10 00 - Summary: Sequencing and staging requirements.

C. Section 01 10 00 - Summary: Description of items to be salvaged or removed for re-use by Contractor.

D. Section 01 50 00 - Temporary Facilities and Controls: Site fences, security, protective barriers, and waste removal.

E. Section 01 60 00 - Product Requirements: Handling and storage of items removed for salvage and relocation.

F. Section 01 70 00 - Execution and Closeout Requirements: Project conditions; protection of bench marks, survey control points, and existing construction to remain; reinstallation of removed products; temporary bracing and shoring.

G. Section 31 22 00 - Grading: Topsoil removal.

H. Section 31 22 00 - Grading: Fill material for filling holes, pits, and excavations generated as a result of removal operations.

I. Section 31 23 23 - Fill: Filling holes, pits, and excavations generated as a result of removal operations.

1.03 REFERENCE STANDARDS

A. 29 CFR 1926 - U.S. Occupational Safety and Health Standards; current edition.

B. NFPA 241 - Standard for Safeguarding Construction, Alteration, and Demolition Operations; 2013.

1.04 SUBMITTALS

A. See Section 01 30 00 - Administrative Requirements, for submittal procedures.

B. Site Plan: Showing:
   1. Vegetation to be protected, if any.
   2. Areas for temporary construction and field offices.
   3. Areas for temporary and permanent placement of removed materials.

C. Demolition Plan: Submit demolition plan as specified by OSHA and local authorities.
   1. Indicate extent of demolition, removal sequence, bracing and shoring, and location and construction of barricades and fences.
   2. Identify demolition firm and submit qualifications.
   3. Include a summary of safety procedures.

D. Project Record Documents: Accurately record actual locations of capped and active utilities and subsurface construction.

1.05 QUALITY ASSURANCE

A. Demolition Firm Qualifications: Company specializing in the type of work required.
   1. Minimum of three years of documented experience.

PART 2 PRODUCTS

2.01 MATERIALS

A. Fill Material: As specified in Section 31 23 23 - Fill.

PART 3 EXECUTION

3.01 SCOPE

A. Remove portions of existing building in the following sequence:
   1. Make preparation for and deenergize existing electrical systems.
   2. Remove existing flood damaged electrical and mechanical equipment not designated to remain..
   3. Remove existing plantings and topsoil. Store topsoil for reuse.
   4. Remove existing vault roof overburden and roof.
   5. Remove portions of existing vault wall indicatedto be removed.

B. Remove fences and gates.

C. Remove other items indicated, for salvage, relocation, and recycling.

3.02 GENERAL PROCEDURES AND PROJECT CONDITIONS

A. Comply with applicable codes and regulations for demolition operations and safety of adjacent structures and the public.
   1. Obtain required permits.
   2. Take precautions to prevent catastrophic or uncontrolled collapse of structures to be removed; do not allow worker or public access within range of potential collapse of unstable structures.
   3. Provide, erect, and maintain temporary barriers and security devices.
   4. Conduct operations to minimize effects on and interference with adjacent structures and occupants.
   5. Conduct operations to minimize obstruction of public and private entrances and exits; do not obstruct required exits at any time; protect persons using entrances and exits from removal operations.

B. Do not begin removal until receipt of notification to proceed from Owner.

C. Protect existing structures and other elements that are not to be removed.
   1. Provide bracing and shoring.
   2. Prevent movement or settlement of adjacent structures.
   3. Stop work immediately if adjacent structures appear to be in danger.

D. Minimize production of dust due to demolition operations; do not use water if that will result in ice, flooding, sedimentation of public waterways or storm sewers, or other pollution.

E. If hazardous materials are discovered during removal operations, stop work and notify Architect and Owner; hazardous materials include regulated asbestos containing materials, lead, PCB's, and mercury.

F. Perform demolition in a manner that maximizes salvage and recycling of materials.
   1. Dismantle existing construction and separate materials.
   2. Set aside reusable, recyclable, and salvageable materials; store and deliver to collection point or point of reuse.

3.03 EXISTING UTILITIES

A. Coordinate work with utility companies; notify before starting work and comply with their requirements; obtain required permits.

B. Protect existing utilities to remain from damage.

C. Do not disrupt public utilities without permit from authority having jurisdiction.

D. Do not close, shut off, or disrupt existing utility branches or take-offs that are in use without at least 3 days prior written notification to Owner.

E. Locate and mark utilities to remain; mark using highly visible tags or flags, with identification of utility type; protect from damage due to subsequent construction, using substantial barricades if necessary.

F. Remove exposed piping, valves, meters, equipment, supports, and foundations of disconnected and abandoned utilities.

G. Prepare building demolition areas by disconnecting and capping utilities outside the demolition zone; identify and mark utilities to be subsequently reconnected, in same manner as other utilities to remain.

3.04 SELECTIVE DEMOLITION FOR ALTERATIONS

A. Drawings showing existing construction and utilities are based on casual field observation and existing record documents only.
   1. Verify that construction and utility arrangements are as shown.
   2. Report discrepancies to Architect before disturbing existing installation.
   3. Beginning of demolition work constitutes acceptance of existing conditions that would be apparent upon examination prior to starting demolition.

B. Remove existing work as indicated and as required to accomplish new work.
   1. Remove rotted wood, corroded metals, and deteriorated masonry and concrete; replace with new construction specified.
   2. Remove items indicated on drawings.

C. Services (Including but not limited to HVAC, Plumbing, Fire Protection, Electrical, Telecommunications, and Safety and Security systems): Remove existing systems and equipment as indicated.
   1. Maintain existing active systems that are to remain in operation; maintain access to equipment and operational components.
   2. Where existing active systems serve occupied facilities but are to be replaced with new services, maintain existing systems in service until new systems are complete and ready for service.
   3. Verify that abandoned services serve only abandoned facilities before removal.
   4. Remove abandoned pipe, ducts, conduits, and equipment; remove back to source of supply where possible, otherwise cap stub and tag with identification.

D. Protect existing work to remain.
   1. Prevent movement of structure; provide shoring and bracing if necessary.
   2. Perform cutting to accomplish removals neatly and as specified for cutting new work.
   3. Repair adjacent construction and finishes damaged during removal work.
   4. Patch as specified for patching new work.

3.05 DEBRIS AND WASTE REMOVAL

A. Remove debris, junk, and trash from site.

B. Leave site in clean condition, ready for subsequent work.

C. Clean up spillage and wind-blown debris from public and private lands.

END OF SECTION

SECTION 031000

CONCRETE FORMWORK

PART 1 - GENERAL

1.1 GENERAL

Work of this Section shall conform to requirements of Drawings and general provisions of the Contract, including General and Supplementary Conditions and Division 1 Specification sections.

1.2 SCOPE

Provide all labor, materials, equipment, services and transportation for formwork and related accessories required to complete all cast-in-place concrete work as shown on Drawings, as specified herein, and as required by the job conditions.

1.3 RELATED WORK SPECIFIED IN OTHER SECTIONS

Submittals	Division 1
Quality Control	Division 1
Concrete Reinforcement and Embedded Assemblies	Section 032000
Cast-in-Place Concrete	Section 033000
Thermal and Moisture Protection	Division 7

1.4 CODES AND STANDARDS

A. Building Code: Concrete work shall conform to the requirements of the Building Code identified on the Structural General Notes, and OSHA requirements, except where more stringent conditions or criteria occur in the standards referenced below and on the Drawings.

B. Standards:

1. ACI 117 – Standard Specifications for Tolerances for Concrete Construction and Materials.
2. ACI 237 – Self Consolidating Concrete.
3. ACI 301 –Specifications for Structural Concrete.
4. ACI 318 – Building Code Requirements for Structural Concrete and Commentary.
5. ACI 347 – Guide to Formwork for Concrete.
6. ACI 347.2R – Guide for Shoring/Reshoring of Concrete Multistory Buildings

C. Definitions:

1. See Section 033000.

1.5 CONTRACTOR QUALIFICATIONS

A. The work of this section shall be performed by a company specializing in the type of concrete formwork required for this Project, with a minimum of 10 years of documented successful experience and shall be performed by skilled workers thoroughly experienced in the necessary crafts.

B. Contractor's Testing Agency Services: Required as specified in Division 1, and herein.

C. Materials and installed work may require testing and retesting at any time during progress of work, as directed by Design Professionals. Tests, including retesting of rejected materials for installed work will be done at Contractor's expense.

1.6 SUBMITTALS

A. Required Submittals - Where the SUBMITTALS section of this Specification is in conflict with Division 1 Submittals, the more stringent requirements for the Contractor apply. Required submittal items are listed here; see below for detailed requirements. Do not submit items not requested.

(1) Submittal Schedule
(2) Formwork Shop Drawings
(3) Shoring/Reshoring Calculations
(4) Product Data
(5) Samples
(6) Compatibility Certification
(7) Hazardous Materials Notification
(8) LEED Submittals

1. Submittal Schedule: See Section 033000.
2. Formwork Shop Drawings:

a) Submit for record: Formwork shop drawings sealed and signed by a registered Design Professional licensed to practice as a Professional Engineer in the state where the project is located. Shop drawings shall clearly indicate but not be limited to the following:

1. Size, type and quality of form materials including conditions at tops and ends of walls. (If wood is used, indicate species.)
2. Form construction indicating structural stability and jointing including special form joints or reveals required by Contract Documents
3. Location and pattern of form tie placement, and other items that affect the appearance of concrete that will remain exposed to view.
4. Form finish clearly indicating proper locations and full coordination with concrete finishes required by Contract Documents.

5. Layout, procedures, and sequencing of shoring and reshoring that correlates with the information contained in the shoring/reshoring calculations described below.
6. Comprehensive (a single drawing per area/element) layout drawings showing openings in structural members, including floor slab, shearwalls, columns and beams. Drawings shall consolidate the work of all trades and shall be coordinated by the Contractor. Submit with or prior to reinforcement submittal for same element/area.

b) Submit for Review

1. Location of proposed construction joints in walls, floors, slabs, beams per Specification Section 033000.

3. Shoring/Reshoring Calculations: Submit for record. Calculations sealed and signed by a registered Design Professional licensed to practice as a Professional Engineer in the state where the project is located. Calculations shall clearly address but not be limited to the following:

a) Shoring removal and reshoring installation procedure including timing and sequencing.
b) Concrete age and strength at the time of each shoring/reshoring operation.
c) Description of construction loads assumed including concrete, formwork, and construction live load in accordance with ACI 347.
d) A description of the distribution of construction loads between the shored/reshored levels.
e) The total construction load imposed on all levels supporting shoring/reshoring at each stage of the shoring/reshoring cycle.
f) A written statement by the Professional Engineer that the total construction load imposed on any level supporting shoring/reshoring, at all stages of the shoring/reshoring cycle, accounting for concrete age and relative strength at time of loading, meets the requirement of Section 3.2.

4. Product Data: Submit copies of manufacturers' product data and installation instructions for proprietary materials used in exposed concrete work, including form liners, release agents, manufactured form systems, ties, and accessories.
5. Samples: At request of Architect, submit samples of form ties and spreaders.
6. Compatibility Certification: Submit for record a written statement certifying that form release agent used is compatible with subsequent architectural finish materials applied to concrete surfaces. Submit along with manufacturer's data.
7. Hazardous Materials Notification: Submit for record. In the event no product or material is available that does not contain hazardous materials as determined by the Owner, a "Material Safety Data Sheet" (MSDS) equivalent to OSHA Form 20 shall be submitted for that proposed product or material prior to installation.

a)

B. Submittal Process: See Section 033000

C. SER Submittal Review: See Section 033000

D. Substitution Request: See Section 033000

E. Request for Information (RFI): See Section 033000

1.7 FORMWORK DESIGN

A. Design of Formwork, Shoring/Reshoring, and its removal is the Contractor's responsibility.

B. Design, erect, support, brace and maintain formwork so that it will safely support vertical and lateral loads per SEI/ASCE 37-02 that might be applied, until such loads can be supported by the concrete structure.

C. Design Requirements:

1. Forms shall be designed for fabrication and erection in accordance with Design Professionals' requirements and recommendations of ACI 301, 318 and 347.
2. Design formwork in a manner such that the total construction load does not at any time exceed the total design load of new or existing construction and accounts for concrete age and relative strength at time of loading. See Section 3.2 for shoring/reshoring requirements.
3. Design formwork for loads and lateral pressures outlined in Section 2.2, ACI 347, and wind and seismic loads as specified by SEI/ASCE 37-02 unless otherwise controlled by local building code.
4. Design formwork to include loads imposed during construction, including weight of construction equipment, concrete mix, height of concrete drop, rate of filling of formwork, vibrator frequency, ambient temperature, foundation pressures, lateral stability, temporary imbalance or discontinuity of building components, and other factors pertinent to safety of structure during construction.
5. The use of flowing concrete (8" (200mm) to 10" (250mm) slump) of Self-Consolidating Concrete requires a review of the formwork design based on the rate of placement and setting time of the mix. Unless shown to be sufficient otherwise, formwork design shall conform to the requirements of ACI 237.

1.8 DELIVERY, STORAGE, AND HANDLING

A. Comply with General Conditions and Division 1, including the following:

1. Store forms and form materials clear of ground and protect from damage.

1.9 QUALITY ASSURANCE BY OWNER'S TESTING AGENCY

A. Field Quality Assurance General: The Owner's Testing Agency shall test and inspect concrete formwork as Work progresses. Failure to detect any defective

work or material shall not in any way prevent later rejection when such a defect is discovered nor shall it obligate Design Professionals for final acceptance.

B. Testing Agency shall provide qualified personnel at site to inspect formwork using the latest Contract Documents and approved shop drawings as follows:

1. Prior to placement of reinforcement, inspect formwork for grade, quality of material, absence of foreign matter, and other imperfections that might affect suitability of concrete placement and tolerances stated herein.
2. Inspect forms for location, configuration, compliance with specified tolerances, block outs, camber, shoring ties, seal of form joints and compliance with Contract Documents.
3. Verify condition of bond surfaces, locations and sizes of all accessories, embedment items, and anchorage for prevention of displacement.
4. Verify proper use/application of form release agents.
5. Inspect concrete surfaces immediately after removal of formwork and prior to any patching or repair work.

C. Owner's Testing Agency shall submit inspection, observation, and/or test reports to the Owner and Design Professionals, as required herein and shall provide an evaluation statement in each report stating whether or not concrete formwork conforms to requirements of Specifications and Drawings and shall specifically note deviations therefrom.

D. Immediately report deficiencies to the Contractor, Owner and Design Professionals.

1.10 QUALITY CONTROL BY CONTRACTOR

See Section 033000.

1.11 OBSERVATIONS AND CORRECTIONS BY DESIGN PROFESSIONALS

See Section 033000.

1.12 PERMITS AND WARRANTY

A. Permits: See Section 033000.

B. Warranty: Comply with General Conditions, agreeing to repair or replace specified materials or Work that has failed within the warranty period. Failures include but are not limited to the following:

1. Discoloration of concrete scheduled to remain exposed to view.
2. Damage of concrete finishes caused by forms.
3. Damage of concrete caused by form stripping.
4. Non-compliance with form finishes required for designated architectural finishes.
5. Non-compatibility of form release agent with subsequent architectural finish materials applied to concrete surfaces.
6. Excessive and/or noticeable bowing in placed concrete members caused by deflection of formwork during concrete placement.

PART 2 - PRODUCTS

2.1 ACCEPTABLE MANUFACTURERS

A. Products of the manufacturers specified in this section establish the minimum functional, aesthetic and quality standards required for work of this section.

B. Substitutions: Comply with General Conditions using form in Division 1.

2.2 FORMWORK REQUIREMENTS

A. General Requirements:

1. Formwork shall meet construction safety regulations for locality in which this Project is located.
2. Forms shall be removable without impact, shock or damage to concrete surfaces, the structure and adjacent materials.
3. Forms shall be tight-fitting, designed and fabricated for required finishes and to withstand concrete weight and maintain tolerances as specified in ACI 117 for the following designations: (See architectural drawings for locations).

    a) Class A – For surfaces prominently exposed to public view where appearance is of special importance.
    b) Class B – Coarse-textured concrete-formed surfaces intended to receive plaster, stucco or wainscoting.
    c) Class C – General Standard for permanently exposed surfaces where other finishes are not specified.
    d) Class D - Minimum quality surface where roughness is not objectionable, usually applied where surfaces will be concealed.

4. Furnish forms in largest practicable sizes to minimize number of joints and to conform to joint system shown on Drawings, using form materials with sufficient thickness to withstand pressure of newly-placed concrete without bow or deflection.
5. Butt Joints: Shall be solid and complete with backup material to prevent leakage of cement paste.

B. Form Finishes for Exposed Surfaces:

1. Type: Straight, smooth, free of cement paste leaks at butt-joints, surface imperfections and other irregularities detrimental to appearance of finished concrete, fully coordinated with requirements for required finish material.
2. Form exposed areas of columns, beams, ledges, balcony fascias to achieve true alignment and level soffit of edge beams and concrete edges. All such areas must be sharp, straight and true to line and level. Edge beams and concrete canopies and ledges must have adequate shoring to prevent any visible amount of sag and sufficient bracing to prevent any lateral movement during construction.

2.3 FORM MATERIALS

A. General: Plywood, fiberglass, metal, metal-framed plywood faced, or other acceptable panel-type materials.

1. Provide materials with sufficient strength to prevent warping.

B. Plywood: Of species and grade suitable for intended use, sound undamaged sheets with clean true edges, minimum 5/8" (16mm) thick, complying with U.S. Product Standard PS-1.

1. Other Acceptable Sheet Materials: 14 gauge (2.0mm) sheet steel or fibrous glass reinforced resin.

C. Lumber: Construction grade or better consistent with calculation requirements, without loose knots or other defects.

1. Use only where entire width can be covered with one board 11-1/4" (285mm) or less in width.

D. Forms for Cylindrical Columns and Supports: Metal, glass-fiber reinforced plastic, or paper or fiber tubes that will produce smooth surfaces without joint indications.

1. Provide units with sufficient wall thickness to resist wet concrete loads without deformation.

E. Pan-Type Forms: Glass-fiber-reinforced plastic or formed steel, stiffened to support weight of placed concrete without deformation.

F. Chamfer for Form Corners:

1. Types: Chamfer strips of wood, metal, PVC or rubber fabricated to produce smooth form lines and tight edge joints, 3/4" (20mm) size, maximum possible lengths.
2. Required for all exposed corners of beam, walls and column forms.

G. Form Ties:

1. Type: Factory-fabricated metal, adjustable length, designed to prevent form deflection and to prevent spalling concrete upon removal.
2. Ties used for architecturally exposed concrete shall be galvanized.
3. Ties shall not leave metal closer than 1-1/2" (40mm) to exposed surface.
4. When removed, ties shall not leave holes larger than 1" (25mm) diameter in concrete surface.
5. Removable Ties: Use type with tapered cones, 1" (25mm) outside diameter, for concrete walls which will remain exposed to view and scheduled for architectural finishes.
6. Snap-Off Ties: Use for concrete walls below grade and walls which will not remain exposed to view and are not scheduled for architectural finishes.
7. Wire Ties: Not acceptable.

H. Nails, Spikes, Lag Bolts, Thru-Bolts, Anchorages:

1. Type: Of size, strength and quality to meet the required quality of formwork.

I. Form Release Agent:

1. Type: Commercial formulation form release agent of non-emulsifiable type which will not bond with, stain, or adversely affect concrete surfaces. Form release agent shall not impair subsequent treatment of concrete surfaces requiring bond or adhesion, or impede the wetting of surfaces to be cured with water or curing compounds. Form release agent shall be compatible with subsequent architectural finish materials applied to concrete surfaces. Apply in compliance with manufacturers' instructions.
2. Form release agent shall meet, at a minimum, all federal and state requirements for volatile organic compounds (VOC's).
3. For Steel Forms: Non-staining rust-preventative type.

J. Reglets: Provide sheet metal reglets formed of same type and gauge as flashing metal, unless indicated otherwise on Drawings. Where resilient or elastomeric sheet flashing, or bituminous membranes are terminated in reglets, provide reglets of not less than 26 gauge (0.55mm) galvanized sheet metal. Fill reglet or cover face opening to prevent intrusion of concrete or debris.

1.

K. Coordinate with materials as specified in Section 032000/Concrete Reinforcement and Embedded Assemblies.

PART 3 - EXECUTION

3.1 FORMWORK

A. General:

1. Inspect areas to receive formwork.

a) Immediately report to Owner's Testing Agency and Design Professionals in writing the conditions that will adversely affect the Work.

2. Construct forms to sizes, shapes, lines, and dimensions shown on Contract Documents, and to obtain accurate alignment, location, grades, level and plumb work in finished structures.
3. Provide formwork sufficiently tight to prevent leakage of cement paste during concrete placement. Solidly butt joints and provide backup material at joints as required to prevent leakage and fins, and to maintain alignment.
4. Provide for openings, offsets, sinkages, keyways, recesses, moldings, rustications, reglets, drips, bevels, chamfers, blocking, screeds,

bulkheads, anchorages and inserts and other features required in the Work.

5. Comply with shop drawings, ACI 301, 318, 347 and Contract Documents.
6. Maintain formwork and finished work construction tolerances complying with ACI 301 and 117.
7. Provide shore and struts with positive means of adjustment capable of taking up formwork settlement during concrete placing operations, using wedges or jacks or a combination thereof.
8. Erect forms for easy removal without hammering or prying against concrete surfaces.
9. Provide crush plates or wrecking plates where stripping may damage cast concrete surfaces.
10. Provide top forms for inclined surfaces where slope is too steep to place concrete with bottom forms only.
11. Kerf wood inserts for forming keyways, reglets, recesses, and the like, to prevent swelling and for easy removal.
12. Chamfer exposed corners and edges as indicated, using wood, metal, PVC or rubber chamfer strips fabricated to produce smooth lines and tight edge joints.
13. Design, erect, support, brace and maintain formwork and shoring to support loads until such loads can be safely supported by the concrete structure.
14. Where specifically shown on the Contract Documents as monolithic, upturned beams, curbs and similar members in connection with slabs shall be formed so that they can be poured integrally with slabs.

B. Concrete Accessories and Embedded Items:

1. Install into forms concrete accessories, sleeves, inserts, anchor bolts, anchorage devices and other miscellaneous embedded items furnished by other trades or that are required for other work that is attached to or supported by cast-in-place concrete.

    a) Use setting drawings, diagrams, instructions and directions provided by suppliers of items to be attached.

2. Install reglets to receive top edge of foundation sheet waterproofing and to receive through-wall flashings in outer face of concrete frame at exterior walls, where flashing is shown at lintels, relieving angles, and other conditions.
3. Install dovetail anchor slots in concrete structures as indicated on drawings or required by other trades.
4. Forms for Slabs: Set edge forms, bulkheads, and intermediate screed strips for slabs to achieve required elevations and contours in finished surfaces.
5. Coordinate with Section 032000/Concrete Reinforcement and Embedded Assemblies.
6. Install accessories and embedded items straight, level, plumb and secure in place to prevent displacement by concrete placement.

C. Temporary Openings:

1. Locate temporary openings in forms at inconspicuous locations.
2. For clean-outs and inspection before concrete placement, locate temporary openings where interior area of formwork would otherwise be inaccessible.
3. For cleaning and inspections, locate openings at bottom of forms to allow flushing water to drain.
4. Securely brace temporary openings and set tightly in forms to prevent loss of concrete.
5. Close temporary openings with tight fitting panels, flush with inside face of forms, neatly fitted so that joints will not be noticeable on exposed concrete surfaces.

D. Provisions for Other Trades: Coordinate and provide openings in concrete formwork to accommodate work of other trades.

1. Determine size and location of openings, recesses, chases, offsets, openings, depressions, and curbs from information provided by trades requiring such items.
2. Accurately place and securely support items built into forms.

E. Cleaning:

1. Normal Conditions:

a) Thoroughly clean forms and adjacent surfaces to receive concrete.
b) Remove chips, wood, sawdust, dirt, standing water or other debris just before placing concrete.
c) Flush with water or use compressed air to remove remaining foreign matter.
d) Verify that water and debris can drain from forms through clean-out ports.

2. During Cold Weather:

a) Remove ice and snow from within forms.
b) Do not use de-icing salts.
c) Do not use water to clean out completed forms, unless formwork and concrete construction will proceed within heated enclosure.
d) Use compressed air or other means to remove foreign matter.

F. Form Release Agents

1. Before placing reinforcing steel and miscellaneous embedded items, coat contact surfaces of forms with an approved non-residual, low VOC form release agent in accordance with manufacturer's published instructions.
2. Do not allow release agent to accumulate in forms or come into contact with reinforcement or concrete against which fresh concrete will be placed.

a) Coat steel forms with nonstaining, rust-preventative material.

3. Remove form release agent and residue from reinforcement or surfaces not requiring form coating.

G. Before Placing Concrete:

1. Inspect and check completed formwork, shoring and bracing to ensure that work is in accordance with formwork requirements of this section and Contract Documents, and that supports, fastenings, wedges, ties, and parts are secure.

a) Make necessary corrections or adjustment to formwork to meet tolerance requirements.

2. Retighten forms and bracing before concrete placement to prevent mortar leaks and maintain proper alignment.
3. Notify Owner's Testing Agency sufficiently in advance of placement of concrete to allow inspection of completed and cleaned forms.

H. During Concrete Placement:

1. Maintain a check on formwork to ensure that forms, shoring, ties and other parts of formwork have not been disturbed by concrete placement methods or equipment.
2. Use positive means of adjustment as required for formwork settlement during concrete placing operations.

I. Camber:

1. Provide camber in formwork as required for anticipated deflections due to weight and pressures of fresh concrete and construction loads.
2. Camber bottom forms where indicated on the drawings. Whenever forms are cambered, screeded levels for establishing top of concrete must be cambered to the same amount and to the same profiles such that scheduled depth of member is not reduced by lifting of forms. Check camber and adjust forms before initial set as required to maintain camber.

J. Surface Defects:

1. Install forms that will not impair the texture of the concrete and are compatible with the specified finish type.

K. Formwork Loads on Grade

1. Where loads from formwork bear on grade, provide suitable load-spreading devices for adequate support and to minimize settlement. In no event shall frozen ground or soft ground be utilized directly as the supporting medium.

L. Footings and Grade Beams:

1. Provide forms for footings and grade beams if soil or other conditions are such that earth trench forms are unsuitable.

2. When trench forms are used, provide an additional 1” (25mm) of concrete on each side of the minimum design profiles and dimensions indicated.

M. For slabs-on-grade, secure edge forms in such a manner as to not move under weight of construction loads, construction and finishing equipment, or workers.

3.2 SHORES AND RESHORES

A. Comply with ACI 347.2R for shoring and reshoring in multistory construction, and as specified herein.

1. For non-post tensioned flat plate concrete structures of five supported levels or more, extend shoring/reshoring at least four levels below the floor or roof being placed (shore formwork, reshore three levels below)
2. For non-post tensioned flat plate concrete structures of less than five supported levels, extend shoring/reshoring to ground.
3. For all other concrete structures of four supported levels or more, extend shoring/reshoring at least three levels below the floor or roof being placed (shore formwork, reshore two levels below)
4. For all other concrete structures of less than four supported levels, extend shoring/reshoring to ground.
5. For shoring/reshoring placed on mud sills, adjustments shall be made by contractor to account for ground settlement.
6. Locate shores/reshores such that the factored (ultimate) construction load imposed onto any slab or beam at any time during the construction cycle does not exceed 90% of the factored (ultimate) design load for that slab or beam, scaled down to reflect effect on capacity of lower concrete strength at time of loading.
7. Construction load shall include the weight of wet concrete, total weight of formwork and shoring/reshoring, and a minimum construction live load of 50 psf (2.5kPa) (increase if construction operations will produce higher loading). Design load includes self-weight of the slab, and superimposed dead and live loads as indicated on the drawings.
8. For comparison of construction loads to design loads, compare factored (ultimate) construction loads to factored (ultimate) design loads. Use the same load factors for the construction load that were used for the design of the slabs.
9. For flat plate or flat slab construction “backshores” or “preshores” as defined in ACI 347 shall be permitted only if appropriate calculations and construction sequences are provided demonstrating that the accumulation of shore loads will not overload any slab. In the absence of such calculations and construction sequences, shores must be removed and reshores installed in a sequence such that each floor is permitted to deflect and carry its own weight prior to the installation of reshores.
10. Reshores shall not be removed until the concrete has attained its specified 28 day strength.

3.3 REMOVING FORMS

A. Formwork not supporting weight of concrete, such as sides of beams, walls, columns, and similar parts of the work, may be removed after cumulatively curing at not less than 50°F (10°C) for 12 hours after placing concrete, provided

concrete is sufficiently hard to avoid damage by form-removal operations, and provided curing and protection operations are maintained after removal of formwork.

B. Formwork supporting weight of concrete, such as beam soffits, joists, slabs, and other structural elements, may not be removed until concrete has attained at least 75% of design compressive strength as proven by cylinder test. If stripping occurs before 3 days, 100% strength must be achieved.

1. Provide reshores as required per ACI 347.
2. Determine potential compressive strength of in-place concrete by testing field-cured specimens representative of concrete location or members.

C. Remove formwork progressively using methods to prevent shock loads or unbalanced loads from being imposed on structure. Comply with ACI 347.

D. Loosen forms carefully. Do not wedge pry bars, hammers, or tools against concrete surfaces.

E. Reshore structural members where required due to design requirements, construction requirements, or construction conditions.

1. Reshore on same day shoring and forms are removed.

F. Whenever formwork is removed during the curing period, the exposed concrete shall be cured per requirements of Section 033000.

G. All wood formwork, including that used in void spaces, pockets and other similar places shall be removed.

H. Form tie holes shall be filled as per approved samples submitted to the Architect and Engineer.

I. The Contractor shall assume responsibility for all damage due to removal of the forms.

3.4 RE-USING FORMS

A. Before forms can be re-used, surfaces that will be in contact with freshly poured concrete must be thoroughly cleaned, damaged areas repaired, and projecting nails withdrawn.

1. Split, frayed, delaminated or otherwise damaged form-facing material will not be acceptable.
2. Apply new form release agent on re-used forms.

B. When forms are extended for successive concrete placement, thoroughly clean surfaces, remove fins and laitance, and tighten forms to close joints. Align and secure joints to avoid offsets.

C. Forms for exposed concrete may be reused only if the surfaces have not absorbed moisture and have not splintered, warped, discolored, stained, rusted or peeled, subject to acceptance by the Design Professionals. The Design

Professionals reserve the right to require the Contractor to remove and reconstruct such formwork as will produce subsequent areas that are acceptable. Do not use "patched" forms for exposed concrete surfaces, unless approved by the Design Professionals.

3.5 CORRECTIVE MEASURES

A. Where the Contractor requests that the Design Professionals develop the corrective actions or review corrective actions developed by others, the Design Professional shall be compensated as outlined in Part 3 – CORRECTIVE MEASURES section of Specification 033000.

END OF SECTION

SECTION 032000

CONCRETE REINFORCEMENT AND EMBEDDED ASSEMBLIES

PART 1 - GENERAL

1.1 GENERAL

Work of this Section shall conform to requirements of Drawings and general provisions of the Contract, including General and Supplementary Conditions and Division 1 Specification sections.

1.2 SCOPE

Provide all labor, materials, equipment, services and transportation for reinforcing steel, accessories, embedments and miscellaneous anchorage accessories, joint fillers, and waterstops for cast-in-place concrete work as shown on Drawings, as specified herein, and as required by the job conditions.

1.3 RELATED WORK SPECIFIED IN OTHER SECTIONS

Submittals	Division 1
Quality Control	Division 1
Concrete Formwork	Section 031000
Cast-in-Place Concrete	Section 033000
Thermal and Moisture Protection	Division 7

1.4 CODES AND STANDARDS

A. Building Code: Concrete work shall conform to the requirements of the Building Code identified on the Structural General Notes, and OSHA requirements, except where more stringent conditions or criteria occur in the standards referenced below and on the Drawings.

B. Standards:

1. ACI 117 – Standard Specifications for Tolerances for Concrete Construction and Materials.
2. ACI 301 –Specifications for Structural Concrete.
3. ACI 315 – Details and Detailing of Concrete Reinforcement.
4. ACI 318 – Building Code Requirements for Structural Concrete and Commentary.
5. ACI 355.2 – Qualification of Post-Installed Mechanical Anchors in Concrete and Commentary
6. ACI 355.4 – Qualification of Post-Installed Adhesive Anchors in Concrete and Commentary
7. American Society for Testing and Materials "ASTM Standards in Building Codes", various standards as referenced herein.
8. AWS D1.1 – Structural Welding Code-Steel.

9. AWS D1.4 – Structural Welding Code-Reinforcing Steel.
10. CRD C 572 – Specification for Polyvinylchloride Waterstops.
11. Concrete Reinforcing Steel Institute ”Manual of Standard Practice”
12. ASTM D3963 Fabrication and Jobsite Handling of epoxy Coated Steel Reinforcing Bars.

C. Definitions:

1. See Section 033000.

1.5 CONTRACTOR QUALIFICATIONS

A. The work of this section shall be performed by a fabricator specializing in the type of reinforcement fabrication required for this Project, with a minimum of 10 years of documented successful experience and shall be performed by skilled workmen thoroughly experienced in the necessary crafts.

1. Welders shall be qualified in accordance with applicable AWS Code within 12 months before starting the work.

a) Make qualification records available to the Design Professionals upon request.

B. Manufacturers shall specialize in manufacturing the types of concrete accessories required for cast-in-place concrete work, with a minimum of 10 years of documented successful experience and shall have the facilities capable of meeting all requirements of Contract Documents as a single-source responsibility and warranty for each type of accessory.

1.6 SUBMITTALS

A. Required Submittals - Where the SUBMITTALS section of this Specification is in conflict with Division 1 Submittals, the more stringent requirements for the Contractor apply. Required submittal items are listed here; see below for detailed requirements. Do not submit items not requested.

(1) Submittal Schedule
(2) Shop Drawings
(3) Product Data
(4) Mill Reports
(5) Hazardous Materials Notification
(6) LEED Submittals

1. Submittal Schedule: See Section 033000.
2. Shop Drawings: Submit shop drawings that shall clearly indicate, but not be limited to:

a) All details, dimensions and information required for fabrication and placement of concrete reinforcement in accordance with Contract Documents, prepared in accordance with ACI 315 recommendations.

b) Elevations, plans, sections, and dimensions of concrete work with required reinforcement clearances.
c) Ledges, brackets, openings, sleeves, anchor rods, embedments, prefabricated bent-in dowel keyway systems, electrical conduit and items of other trades including interference with reinforcing materials.
d) Sizes, grade designations, spacing, locations, and quantities of wire fabric, reinforcement bars, temperature and shrinkage reinforcement dowels.

i. Do not use dimensions scaled from Contract Drawings to determine bar lengths.
ii. Hooks and bends not specifically dimensioned shall be detailed per ACI 318.

e) Bending and cutting schedules, assembly diagrams, splicing and connection requirements, details, and laps.
f) Each type of supporting and spacing devices, including miscellaneous accessories.
g) Construction joint type, details and locations. Contractor shall coordinate with concrete pour schedule and submit for action by the Design Professionals.
h) Submit comprehensive (a single drawing per area/element) layout/placement drawings. Drawings shall consolidate the work of all trades and shall be coordinated by the Contractor. Submit with or prior to reinforcement submittal for same element/area. Drawings shall include:

i. Concrete accessories and embedded items, including fabrication details of items to be placed (exclusive of reinforcement.)
ii. Opening in structural members, including floor slab, shearwalls, columns and beams.

3. Product Data: Submit for approval for each type of product identified in Part 2. Product Data shall be clearly marked to indicate all technical information which specifies full compliance with this section and Contract Documents, including published installation instructions and I.C.C reports, where applicable, for products of each manufacturer specified in this section.
4. Mill Reports: Submit for record.
5. Reinforcement Strain Test: For Grade 75 reinforcement, submit for record certification that steel has a yield strength of no less than 75 ksi as measured by both ASTM A615 and ACI 318 Section 3.5.3.2 procedures.
6. Hazardous Materials Notification: Submit for record. In the event no product or material is available that does not contain hazardous materials as determined by the Owner, a "Material Safety Data Sheet" (MSDS) equivalent to OSHA Form 20 shall be submitted for that proposed product or material prior to installation.

a)

B. Submittal Process: See Section 033000

C. SER Submittal Review: See Section 033000

D. Substitution Request: See Section 033000

E. Request for Information (RFI): See Section 033000

1.7 DELIVERY, STORAGE, AND HANDLING

A. Comply with General Conditions and Division 1, including the following:

1. Deliver reinforcing steel to Project site bundled, tagged and marked.

a) Use weatherproof tags indicating bar sizes, lengths and other information corresponding to markings shown on placement diagrams.

2. Deliver welded wire fabric in sheets. Do not deliver in rolls.
3. During construction period, properly store reinforcing steel and accessories to assure uniformity throughout the Project.
4. Deliver and store welding electrodes in accordance with AWS D1.4.
5. Immediately remove from site materials not complying with Contract Documents or determined to be damaged.
6. Store reinforcing steel above ground so that it remains clean.

a) Maintain steel surfaces free from materials and coatings that might impair bond.
b) Keep covered.
c) Protect against corrosion or deterioration of any kind.

1.8 QUALITY ASSURANCE BY OWNER'S TESTING AGENCY

A. Field Quality Assurance General: The Owner's Testing Agency shall test and inspect concrete reinforcement and embedded assemblies as Work progresses. Failure to detect any defective work or material shall not in any way prevent later rejection when such defect is discovered nor shall it obligate the Design Professionals for final acceptance.

B. Owner's Testing Agency shall provide qualified personnel at the site to inspect reinforcement, embedments, and accessories using the latest Drawings and reviewed shop drawings, as follows:

1. Prior to placement, inspect reinforcement and embeds for grade, quality of material, absence of foreign matter, and for suitable storage.
2. Provide continuous inspection of reinforcement and embedded assemblies during placement and immediately prior to concreting operations for: size, quantity, vertical and horizontal spacing and location, correctness of bends and splices, mechanical splices, clearances, compliance with specified tolerances, security of supports and ties, concrete cover, and absence of foreign matter.

3. Inspect epoxy-coated reinforcement for coating damage and required applied coatings.
4. Provide continuous inspection of adhesive anchors installed in horizontal or upwardly inclined orientations and those marked (CERT) on the latest Drawings.

C. Adhesive anchors shall be proof tested in tension as follows:

1. The Owner's Testing Agency shall submit an adhesive anchorage proof testing plan to the SER for review and approval prior to performing the anchor proof testing. The anchorage testing plan shall meet the requirements as specified in this section and indicate which anchors have been selected for testing.
2. Proof testing shall be performed as a confined tension test in accordance with the guidelines of ASTM E488 and the requirements of ACI 355.4.
3. Testing shall be performed after the minimum curing period specified by the manufacturer.
4. 10 percent of each type and size of an adhesive anchor assembly and 100 percent of anchors marked (CERT) shall be proof tested in tension by the Owner's Testing Agency.
5. All anchors selected for proof testing shall be production anchors. Sacrificial anchors are not acceptable for inclusion in the proof testing plan unless specifically approved by the SER prior to performance of the testing.
6. The adhesive anchors proof tension loads shall be as specified in the general notes of the structural drawings.
7. Anchors shall have no visible indications of displacement or damage during or after proof load application. Concrete cracking in the vicinity of the anchor after loading shall be considered a failure.
8. If more than 10% of the tested adhesive anchors fail to achieve the specified proof load, 100% of the anchors of the same diameter and type as the failed anchor shall be proof tested, unless otherwise direct in writing by the SER. Notify the SER of all failed proof tests.

D. Mechanical post-installed anchors shall be proof tested as follows:

1. The Owner's Testing Agency shall submit a mechanical anchorage proof testing plan to the SER for review and approval prior to performing the anchor proof testing. The anchorage testing plan shall meet the requirements as specified in this section and indicate which anchors have been selected for testing.
2. 10 percent of each type and size of mechanical anchor shall be proof tested by the Owner's Testing Agency. The required proof test for the anchors is as follows:

    a) For torque-controlled mechanical anchors, a proof torque shall be applied to the anchor using a calibrated torque wrench and the proof torque shall be achieved with no more than one-half turn of the anchor nut.

    b)

3. The required proof torque load for torque-controlled mechanical anchors shall be as specified in the general notes of the structural drawings.
4. All anchors selected for proof testing shall be production anchors. Sacrificial anchors are not acceptable for inclusion in the proof testing plan unless specifically approved by the SER prior to performance of the testing.
5. Concrete cracking in the vicinity of the anchor during or after proof torque load application shall be considered a failure.
6. If more than 10% of the tested mechanical anchors fail to achieve the specified proof torque load or set, 100% of the anchors of the same diameter and type as the failed anchor shall be proof tested, unless otherwise direct in writing by the SER. Notify the SER of all failed proof tests.

E. Periodic inspection for post-installed adhesive and mechanical anchors shall be provided in accordance with the building code except that continuous inspection shall be provided for the conditions identified in section B.4. The inspector shall observe all aspects of the anchor installation and shall, at a minimum, verify the following items:

1. Hole drilling method in accordance with the Manufacturer's Published Installation Instructions (MPII) and these installation requirements.
2. Anchor spacing and edge distance.
3. Hole diameter and depth.
4. Hole cleaning in accordance with the MPII.
5. Anchor element type, material, diameter, and length.
6. For adhesive anchors, adhesive identification and expiration date.
7. For adhesive anchors, adhesive installation in accordance with the MPII.
8. For torque-controlled mechanical anchors, the number of turns required to achieve the anchor set torque per the MPII.

F. Owner's Testing Agency shall submit inspection, observation, and/or test reports to the Owner and Design Professionals, as required herein and shall provide an evaluation statement in each report stating whether or not concrete reinforcement, embedded assemblies, and post-installed anchors conforms to requirements of Specifications and Drawings and shall specifically note deviations therefrom.

G. Immediately report deficiencies to the Contractor, Owner and Design Professionals.

1.9 QUALITY CONTROL BY CONTRACTOR

See Section 033000.

1.10 OBSERVATIONS AND CORRECTIONS BY DESIGN PROFESSIONALS

See Section 033000.

1.11 PERMITS AND WARRANTY

A. Permits: See Section 033000.

B. Warranty: Comply with General Conditions, agreeing to repair or replace specified materials or Work that has failed within the warranty period. Failures include but are not limited to the following:

1. Bars with kinks or bends not indicated on Drawings or on approved shop drawings.
2. Bars damaged due to bending, straightening or cutting.
3. Bars heated for bending.

PART 2 - PRODUCTS

2.1 REINFORCEMENT

A. Reinforcing Steel:

1. Type: Deformed billet steel bars, ASTM A 615, Grade 60 or 75 as indicated on Drawings.
2. Size: As indicated on structural Drawings.
3. Where indicated on Drawings, reinforcing steel shall be hot-dipped galvanized after fabrication in accordance with ASTM A 767, Class II, with galvanizing material protected from embrittlement during galvanizing process in accordance with ASTM A 143.

   a) Galvanized finish shall meet the bend and shear test requirements of ASTM A 615.

4. Epoxy-Coated: ASTM A 775 where indicated on Drawings.
5. Weldable reinforcement: ASTM A 706 where indicated on Drawings.

B. Welded Wire Reinforcement:

1. Type: steel wire, plain finish, ASTM A 82.
2. Type: steel wire, deformed, ASTM A 496.
3. Size: As indicated on structural Drawings.
4. Where indicated on Drawings, welded wire reinforcement shall be hot-dipped galvanized after fabrication in accordance with ASTM A 767, Class II, with galvanizing material protected from embrittlement during galvanizing process in accordance with ASTM A 143.

   a) Galvanized finish shall meet the bend and shear test requirements of ASTM A 615.

5. Plain Steel Welded Wire Reinforcement: ASTM A 1064.
6. Deformed Steel Welded Wire Reinforcement: ASTM A 497.
7. Epoxy-Coated Welded Wire Reinforcement: ASTM A 884, Class A.

C. Shear Reinforcement At Slab-Column Connections:

1. Type: Steel studrail assemblies for shear reinforcement at slab-column connections shall be DECON STUDRAILS supplied by DECON USA, Medford New Jersey.

a) Shear studs shall be in accordance with ASTM A108, Grade C1015.
b) Rails shall be low carbon steel Type 44W.
c) Studs shall be welded in accordance with AWS D1.1.

2. Size: As indicated on structural Drawings.
3. Installation: Per manufacturer's instructions.
4. Supports: Use plastic molded plastic chairs as provided by the manufacturer to maintain the bottom rebar cover as specified on the Drawings. Tie studrails to adjacent top bars to maintain vertical position.

D. Reinforcement Coating Repair Materials:

1. Apply repair coating in accordance with the manufacturer's written procedures.
2. Galvanized Repair Coating: Zinc-based solder, paint containing zinc dust or sprayed zinc complying with ASTM A780.
3. Epoxy Repair Coating: Liquid, two-part, epoxy repair coating; compatible with epoxy coating on reinforcement and complying with ASTM A 775/ A 775M.

a) The maximum amount of repaired damaged areas shall not exceed 2% of the surface area in each linear foot of each bar. If more than 2% of the surface area in each linear foot of bar is damaged, bar shall be replaced.

2.2 ACCESSORIES

A. Tie Wire:

1. Type: Minimum 16 gauge (1.5mm) annealed steel wire, ASTM A 510 and ASTM A 853.
2. Wire Bar Type: Comply with CRSI.

B. Mechanical Splicing Systems:

1. Mechanical tension and compression splicing systems shall be used where indicated on Drawings or at contractor's option. For seismic design categories D, E and F, in plastic hinge regions, only Type 2 mechanical splices are permitted.
2. Acceptable Products: Bartec Couplers by Dextra, Santa Fe Springs, CA or Lenton Cadweld by Erico, Solon, OH or Bar Lock coupler system by Dayton Superior, Miamisburg, OH or Grip-Twist by Bar Splice, Dayton, OH or ZAP Screwlok by Bar Splice, Dayton, OH or Lenton Couplers by Erico, Solon, OH. Splices shall be installed in compliance with manufacturer's requirements.
3. Mechanical and welded tensile mechanical splicing systems shall be capable of developing 125% of the reinforcing steel ASTM specified minimum yield strength (Type 1) except where indicated as Type 2 (100% of specified tensile strength).
4. Mechanical compression splices shall be such that the compression stress is transmitted by end bearing held in concentric contact.

C. Headed Bars:

1. For bar sizes #11 (ø36) or smaller where specifically detailed on Drawings, mechanical bar terminators shall be used.
2. Acceptable Products: Bartec End Anchors by Dextra, Santa Fe Springs, CA or Lenton Terminator by Erico, Solon, OH or Grip-Twist Doughnut by Bar-Splice, Dayton, OH or Bar Lock End Anchorage System by Dayton Superior, Miamisburg, OH.

D. Supports for Reinforcement:

1. Types: Bolsters, chairs, spacers, clips, chair bars, and other devices for properly placing, spacing, supporting, and fastening the reinforcement, plastic, plastic protected steel, or epoxy coated to match supported reinforcement.
2. For Contact with Forms: Use types with not less than 3/32" (2.5mm) of plastic between metal and concrete surface.

   a) Plastic tips shall extend not less than ½" (12mm) on metal legs.

3. Individual and continuous slab bolsters and chairs shall be of type to suit various conditions encountered and must be capable of supporting 300 pound (1.5kN) load without damage or permanent distortion.
4. Unless otherwise indicated on Drawings, bottom reinforcing bars in footings shall be supported by precast concrete bricks or individual high chairs with welded sand plates on bottom.
5. For Slabs on Grade: Use supports with sand plates or horizontal runners where base material will not support chair legs.

E. Deformed Bar Anchors:

1. Type: Automatic end welded, ASTM A 496 quality.
2. Size and Grade: As indicated on structural Drawings by Nelson Stud Welding.

F. Anchor rods and dowels:

1. Types and Sizes: Provide sizes and types of anchor rods and dowels as indicated on the Drawings. Each type of anchor shall be manufactured of structural quality steel, designed for cast-in-place concrete applications and be of sizes as indicated on Drawings, complete with washers, nuts, plates and miscellaneous accessories required to meet Contract Document requirements.
2. Adhesive Anchors for anchor rods and dowels in existing concrete: See Anchorage Accessories.

G. Prefabricated Bent-In Dowel Keyway System:

1. Type, Size and Grade as indicated on Drawings.
2. Acceptable Products: Lenton Form Savers by Erico, Solon, OH or Stabox by Meadow Burke, Tampa, FL or Metalstrip by Dayton Superior, Miamisburg, OH.

3. Installation: Per Manufacturer's instructions.

2.3 ANCHORAGE ACCESSORIES

A. General: Miscellaneous anchorage accessories for anchoring structural, architectural, electrical, and mechanical items to poured concrete shall include but not be limited to the following:

1. Concrete Anchors: Headed or bent studs ASTM A 108/Grade 1015 through 1020, minimum yield strength of 50,000 psi (345MPa), minimum tensile strength of 60,000 psi (415MPa).
2. Anchor Rods: ASTM F1554, Grade as noted on Drawings.
3. Threaded Inserts: Manufactured by Dayton/Richmond Screw Anchor Co. or Powers Fasteners, Inc.
4. Adhesive Anchors:

a) Basis of Design: See General Notes
b) Substitution Request: As anchor capacities vary by manufacturer, the following anchors will be considered as a Substitution Request. Refer to project specifications for Substitution Request procedure

i. HIT-RE 500-SD by Hilti, Inc., Tulsa, OK
ii. Epcon C6+ by ITW Red Head, Glendale Heights, IL
iii. Epcon G5 by ITW Red Head, Glendale Heights, IL
iv. PE 1000+ by Powers Fasteners, Brewster, NY
v. Pure 110+ by Powers Fasteners, Brewster, NY
vi. SET-XP by Simpson Strong-Tie Co., Pleasanton, CA

c) The adhesive anchor system used for post-installed anchorage to concrete shall conform to the requirements of ACI 355.4 and commentary and shall possess a current ICC- ES report demonstrating compliance with ACI 318.

5. Expansion Anchors:

a) Basis of Design: See General Notes
b) Substitution Request: As anchor capacities vary by manufacturer, the following anchors will be considered as a Substitution Request. Refer to project specifications for Substitution Request procedure.

i. Power Stud+ SD1 or SD2 by Powers Fasteners, Brewster, NY
ii. Power Stud + SD6 (SS) by Powers Fasteners, Brewster, NY
iii. Trubolt or Trubolt+ by ITW Red Head, Glendale Heights, IL
iv. Strong-Bolt by Simpson Strong-Tie Co., Pleasanton, CA

c) The expansion anchors used for post-installed anchorage to concrete shall conform to the requirements of ACI 355.2 and

commentary and shall possess a current ICC- ES report demonstrating compliance with ACI 318.

6. Threaded Screw Anchors:

   a) Basis of Design: See General Notes
   b) Substitution Request: As anchor capacities vary by manufacturer, the following anchors will be considered as a Substitution Request. Refer to project specifications for Substitution Request procedure.

      i. Wedge Bolt+ by Powers Fasteners, Brewster, NY
      ii. Tapcon by ITW Red Head, Glendale Heights, IL
      iii. Titan HD by Simpson Strong-Tie Co., Pleasanton, CA

7. Inserts and Coil Rods: Yield strength 65,000 psi (450MPa), ASTM B 633, manufactured by Acrow-Richmond Limited or Dayton Superior, Dayton, OH.
8. Welding Electrodes: AWS 5.5, Series E70.
9. Welded Deformed Bar Anchors: Welded by full-fusion process, as furnished by TRW Nelson Stud Welding Division or equivalent.

B. Dovetail Anchor Slots:

1. Type: Formed 22 gauge (0.85mm) galvanized steel manufactured by Heckmann Building Products, Chicago, Illinois or Hohmann and Barnard, Hauppauge, New York or Pro-Slot by BoMetals, Inc., Carrollton, GA.
2. Location of Use: Continuous installation of anchor slots, full height of masonry walls, where masonry walls abut poured concrete walls.
3. Fill slot with temporary filler or cover face opening to prevent intrusion of concrete or debris.
4. Finish: Hot-dip galvanized or zinc-plated steel.
5. Stainless steel anchors are acceptable.

2.4 JOINT FILLERS

A. Permanent Compressible Joint Filler:

1. Type: W. R. Meadows: “Ceramar” closed-cell expansion joint filler, ultraviolet stable, minimal moisture absorption, non-impregnated, nonstaining and nonbleeding, inert and compatible with cold-applied sealants.
2. Location of Use: Slabs and curbs as indicated on Drawings or required.
3. Thickness: As indicated on Drawings or required.

B. Temporary Compressible Joint Filler:

1. Type: White molded polystyrene beadboard.
2. Location of Use:

   a) In slabs, curbs, and walls which must be removed prior to joint sealant installation.

b) Vertically to isolate walls from columns or other walls.

C. Semi Rigid Joint Filler:

1. Acceptable Product: Euclid Chemical Company “Euco 700” or “Euco QWIKjoint 200”
2. Acceptable Product: Sika Corporation “Sikadur 51 SL”
3. Acceptable Product: W.R. Meadows Sealtight “Rezi-Weld Flex”

D. Noncompressible Joint Filler:

1. Type: Dow Chemical's "STYROFOAM 40" rigid closed-cell extruded polystyrene board, square edges, 40 psi (275kPa) compressive strength, ASTM C 578, Type IV.
2. Thickness: As indicated on Drawings.
3. Location of Use: As indicated on Drawings or required.

E. Asphalt-Impregnated Joint Filler:

1. Type: W.R. Meadows Asphalt Expansion Joint Filler, preformed, ASTM D 994.
2. Thickness: ½” (12mm) maximum, as indicated on Drawings or required.
3. Location of Use: Sidewalks at foundation walls and as indicated on Drawings or required.

F. Asphalt-impregnated fiberboard expansion joint filler for interior work:

1. Type: ASTM D1751.

G. Self-expanding cork board expansion joint filler for exterior work:

1. Type: ASTM D1752.

H. Construction Joints:

1. Type: Tongue and groove type profile of galvanized steel, with knock-out holes at 6" (150mm) on center to receive dowelling, complete with anchorage.

2.5 WATERSTOPS

A. Preformed Swellable Waterproofing Strips especially formulated for concrete cold joints at footings, walls, or slabs.

1. Acceptable Products:

a) “Volclay Waterstop RX” by CETCO Building Materials Group, Hoffman Estates, IL
b) “Adcor ES” by W. R. Grace & Co., Cambridge, MA
c) “Hydrotite” by Sika, Lyndhurst, NJ

2. Size: 3/4" (20mm) by 3/8" (10mm) strips minimum, 25 ft. (7.5m) long, and weighing at least 0.165 lbs/ft (0.245kg/m).

3. Location of Use: Concrete cold joints at footings, walls and slab joints.
4. Comply with manufacturer product application and installation instructions.

B. Polyvinyl Chloride Waterstops:

1. Type: PVC Waterstops for embedding in concrete to prevent passage of fluids through joints. Factory fabricate corners, intersections and directional changes. U.S. Corp of Engineers Specification CRD C 572.
2. Acceptable Products:

a) “PVC Waterstops” by BoMetals, Carrollton, GA
b) “Greenstreak” by Sika, Lyndhurst, NJ
c) “Sealtight PVC Waterstops” by W.R. Meadows, Hampshire, IL

PART 3 - EXECUTION

3.1 FABRICATION

A. Reinforcing Steel Fabrication:

1. Fabricate in accordance with approved shop Drawings, ACI 315 and Contract Documents.
2. Heating of Reinforcement: Will be permitted only with specific prior approval of the SER.
3. Welding: Comply with ANSI/AWS D1.4; use E9018 electrodes or approved electrodes.
4. Tolerances: Comply with ACI 117.
5. Unacceptable Materials: Reinforcement with any of following defects will not be permitted in Work.

a) Bar lengths, depths, and bends exceeding ACI fabrication tolerances.
b) Bends or kinks not indicated on Drawings or final shop drawings.
c) Bars with reduced cross-section due to excessive rusting or other cause.

B. Welded Wire Reinforcement:

1. Type: As fabricated in accordance with CRSI, unless otherwise noted.

C. Templates:

1. Required for all footing and column dowels, and where required for proper alignment of reinforcing.

D. Assemblies:

1. Fabricate and assemble structural steel items in shop in conformance with AISC and AWS D1.1. Shearing, flame cutting, and chipping shall be done carefully and accurately. Cut, drill, or punch holes at right angles to

the surface of the metal. Do not make or enlarge holes by burning. Holes shall be clean-cut without torn or ragged edges.

2. Welding of deformed bar anchors and headed stud anchors shall be installed by full-fusion process equivalent to TRW Nelson Stud Welding Division or KSM Welding Services Division, Omark Industries or Tru-Weld Stud Welding, Medina, OH.
3. Welding of reinforcement shall be done in accordance with AWS requirements. Welding shall be performed subject to the observance and testing by Owner's Testing Agency.
4. Galvanizing where required, shall be applied after fabrication and prior to casting concrete.
5. Welding of crossing bars (tack welding) for assembly of reinforcement is not permitted without use of weldable reinforcement and express written consent of SER.

3.2 INSTALLATION OF REINFORCEMENT

A. General:

1. Perform the work of this section in accordance with approved shop drawings, ACI 318 and CRSI recommended practice for "Placing Reinforcing Bars", for details and methods of reinforcement placement and supports, and as specified.
2. Before placing reinforcement steel, inspect forms for proper fitting and compliance with allowable tolerances.
3. Reinforcement shall be free of form coatings, sealers, powdered and scaled rust, loose mill scale, earth, ice, and other materials which will reduce or destroy bond with concrete.
4. Do not place concrete until the completed reinforcement steel work has been observed and accepted by Owner's Testing Laboratory.
5. Reinforcement steel is not permitted to be "floated into position".
6. Bend bars cold.

    a) Do not heat or flame cut bars.
    b) No field bending of bars partially embedded in concrete is permitted, unless specifically approved by the SER and tested by Independent Testing Agency for cracks.

7. Weld only as indicated.

    a) Perform welding per ANSI/AWS D12.1 and/or ANSI/AWS D1.4.
    b) See structural Drawings for additional requirements.

8. Tag reinforcement steel for easy identification.

B. Placement of Reinforcement Bars:

1. Comply with approved shop drawings, ACI 318 and Contract Documents.
2. Accurately position, support and secure reinforcement in a manner to prevent displacement before and during placement of concrete.

    a) Place reinforcement bars within tolerances specified in ACI 117.

b) Locate and support reinforcement by metal chairs, runners, bolsters, spacers, hangers and other accessories for fastening reinforcing bars and welded wire reinforcement in place.

3. If bars are displaced beyond specified tolerance when relocating the bars to avoid interference with other reinforcement or embedded items, notify the Design Professionals for approval prior to concrete placement.
4. Avoid cutting or puncturing vapor retarder during reinforcement placement.

a) Repair damages before placing concrete.

5. Concrete Coverage: Maintain concrete cover around reinforcement as indicated on Drawings.
6. Bar Supports: Use type specified in this section.
7. Tie Wires: After cutting, turn tie wires to the inside of section and bend so that concrete placement will not force ends to be exposed at face of concrete.

C. Placement of Wire Reinforcement:

1. Install in lengths as long as practicable.
2. Support in position adequately to prevent bending of reinforcement between supports before and during placement of concrete.
3. Overlap the wire reinforcement 6” (150mm) or one panel width + 2” (50mm), whichever is larger.

a) Securely tie together with wire.

4. Offset laps of adjoining widths to prevent continuous laps in either direction.
5. Locate wire fabric in the top third of slabs, unless noted otherwise on structural Drawings.

D. At Construction Joints:

1. Reinforcement bars and wire reinforcement shall be continuous through construction joints, unless otherwise indicated on Drawings. See Drawings for scheduled lap splices.

E. At Expansion Joints:

1. Reinforcing bars and wire fabric shall NOT be continuous through expansion joints, unless otherwise indicated on Drawings.

F. Splicing:

1. Unless otherwise indicated on Drawings provide lap splices for bar sizes #11 (ø36) and smaller by lapping ends, placing bars in contact, and tying tightly with wire in accordance with requirements of ACI 318 for lap lengths indicated on Drawings.

2. At all #14 (ø43) and #18 (ø57) bars and where mechanical splices are specifically indicated on Drawings, comply with requirements specified in this Specification section under “Mechanical Splicing Systems”.
3. Do not splice reinforcement except as indicated on structural Drawings.
4. Tension couplers may be used and installed per manufacturer’s specifications where indicated on Drawings or as approved by Engineer.

G. Dowels in Existing Concrete:

1. Install dowels and dowel adhesive in accordance with supplier’s recommendations.
2. Minimum embedment length shall be 12 bar diameters, unless noted otherwise.

3.3 INSTALLATION OF POST-INSTALLED ADHESIVE ANCHORS

A. General:

1. Post-installed adhesive anchors shall be installed in accordance with the Manufacturer’s Printed Installation Instructions (MPII).
2. The adhesive anchors shall be supplied as an entire system. The contractor shall provide all equipment required to install the adhesive anchor in accordance with the MPII.
3. Anchors shall be installed in holes drilled with a rotary impact hammer drill with carbide bit. Contractor shall obtain written approval from SER prior to using rock drilling or core drilling installation methods.
4. Anchor holes shall be thoroughly cleaned prior to adhesive injection, in accordance with the MPII. Anchors to be installed in the adhesive shall be clean, oil-free, and free of loose rust, paint, or other coatings
5. Concrete shall have a minimum compressive strength of 2500 psi (17MPa).
6. Concrete at time of adhesive anchor installation shall have a minimum of 21 days.
7. Concrete temperature at the time of adhesive anchor installation shall be at least equal to manufacture's requirements, or 50° F (10°C) if no requirement exists.
8. Support the anchor and protect it from disturbance or loading for the full cure time stated by the manufacturer at that base material temperature.
9. Unless specified otherwise in the contract documents, anchors shall be installed perpendicular to the concrete surface. Anchors displaced or disturbed prior to the adhesive cure time shall be considered damaged and reported to the SER (see Observations and Corrections section of 033000).
10. Locate, by non-destructive means, and avoid all existing reinforcement prior to installation of anchors. If existing reinforcement layout prohibits the installation of anchors as indicated in the drawings the contractor shall notify the Design Professionals immediately.
11. Reinforcement bars or all-threaded bars shall not be bent after being adhesively embedded in hardened, sound concrete, unless written approval is given by the SER.

12. All personnel installing anchors shall be trained by the manufacturer on proper installation techniques. Submit for record certificate from training documentation from the manufacturer for each installer on this Project
13. Installation of adhesive anchors horizontally or upwardly inclined and anchors that are designated with a (CERT) after the anchor call-out, shall be performed by personnel certified by the ACI/CRSI Adhesive Anchor Installer Certification program. Submit for record certificate from ACI-CRSI Adhesive Anchor Installation Certification Program for each certified installer on this Project.

3.4 INSTALLATION OF ACCESSORIES

A. Install concrete accessories in accordance with manufacturer's published instructions and Contract Documents.

1. Set and secure embedments, including embedded plates, bearing plates, and anchor bolts, per approved setting drawings and in such a manner to prevent movement during placement of concrete and to allow removal of formwork without damage.
2. Inspect locations to receive concrete accessories.
3. Immediately report to the Design Professionals in writing of conditions that will adversely affect the Work or fails to meet Contract Document requirements.
4. Do not place concrete until reinforcement, accessories and other built-in items have been inspected and accepted by Owner’s Testing Agency.

B. Construction and Contraction (Control) Joints:

1. Construction and contraction (control) joints indicated on Drawings are mandatory and must not be omitted.

    a) Provide construction joints in accordance with ACI 318.
    b) Roughen surface at construction joints as indicated on the drawings.
    c) Where specifically indicated on drawings, provide 1-1/2” (40mm) deep key type construction joints at end of each placement for slabs, beams, walls and footings.

        i. Bevel forms for easy removal.

2. Provide waterstops in construction joints as indicated on the Contract Documents in sizes to suit joint.
3. Install waterstops to form continuous diaphragm in each joint.
4. Support and protect exposed waterstops during progress of Work.
5. Field-fabricate joints in waterstops according to manufacturer’s printed instructions.

C. Coordinate the installation of pipes, bolts, hangers, anchors, flashing and other embedded items with the work of other trades.

3.5 CORRECTIVE MEASURES

A. Where the Contractor requests that the Design Professionals develop the corrective actions or review corrective actions developed by others, the Design Professional shall be compensated as outlined in Part 3 – CORRECTIVE MEASURES section of Specification 033000.

END OF SECTION

SECTION 033000

CAST-IN-PLACE CONCRETE

PART 1 - GENERAL

1.1 GENERAL

Work of this Section shall conform to requirements of Drawings and general provisions of the Contract, including General and Supplementary Conditions and Division 1 Specification sections.

1.2 SCOPE

Provide all labor, materials, equipment, services and transportation required to complete all concrete work as shown on Drawings, as specified herein, and as required by the job conditions. This Specification is not intended to address the particular requirements of Architectural Concrete.

1.3 RELATED WORK SPECIFIED IN OTHER SECTIONS

Submittals	Division 1
Quality Control	Division 1
Concrete Formwork	Section 031000
Concrete Reinforcement and Embedded Assemblies	Section 032000
Thermal and Moisture Protection	Division 7

1.4 CODES AND STANDARDS

A. Building Code: Concrete work shall conform to the requirements of the Building Code identified on the Structural General Notes, and OSHA requirements, except where more stringent conditions or criteria occur in the standards referenced below and on the Drawings.

B. Standards:

1. ACI 117 – Standard Specifications for Tolerances for Concrete Construction and Materials.
2. ACI 237 – Self Consolidating Concrete.
3. ACI 301 – Specifications for Structural Concrete.
4. ACI 318 – Building Code Requirements for Structural Concrete and Commentary.
5. American Concrete Institute “Manual of Concrete Practice”, various committee reports as referenced herein.
6. American Society for Testing and Materials "ASTM Standards in Building Codes", various standards as referenced herein.
7. AASHTO T318 – Standard Method of Test for Water Content of Freshly Mixed Concrete Using Microwave Oven Drying.

C. Definitions:

1. The term “Contract Documents” in this Specification is defined as the design Drawings and the specifications.
2. The term “SER” in this Specification is defined as the Structural Engineer of Record for the structure in its final condition.
3. The term “Design Professionals” in this Specification is defined as the Owner’s Architect and SER.
4. The term “Contractor” in this Specification is defined to include any of the following: General Contractor and their sub-contractors, Construction Manager, Concrete Contractor and their sub-contractors.
5. The term “Testing Agency” in this Specification is defined as an independent testing and inspection service engaged by the Owner for quality assurance observation and testing of concrete construction in accordance with applicable building code provisions and any additional activities listed in the Contract Documents.
6. The terms “for record” and “submit for record” in this Specification are defined as Contractor submittals that do not require a response from the Design Professionals.
7. Working Days: Monday through Friday, excluding federal or state holidays.

1.5 CONTRACTOR QUALIFICATIONS

A. The work of this section shall be performed by a company specializing in the type of concrete work required for this Project, with a minimum of 10 years of documented successful experience and shall be performed by skilled workmen thoroughly experienced in the necessary crafts.

B. Contractor’s Testing Agency Services: Required as specified in Division 1, and herein.

C. Materials and installed work may require testing and retesting at any time during progress of work, as directed by Design Professionals. Tests, including retesting of rejected materials for installed work will be done at Contractor's expense.

1.6 SUBMITTALS

A. Required Submittals - Where the SUBMITTALS section of this Specification is in conflict with Division 1 Submittals, the more stringent requirements for the Contractor apply. Required submittal items are listed here; see below for detailed requirements. Do not submit items not requested. Reproduction of structural drawings for shop drawings is not permitted. Building Information Models for contractor’s use may be provided as mutually agreed upon by Design Professionals.

(1) Submittal Schedule
(2) Mix Designs
(3) Concrete Travel Times to the Project Site as Applicable
(4) Hot and Cold Weather Procedures
(5) Product Data
(6) Concrete Joint Locations
(7) Preconstruction Survey

(8) Survey of Flat Plate or Flat Slab Concrete Floors during construction
(9) Survey of As-built Floor Conditions
(10) Survey of As-built Column and Wall Conditions
(11) Structural Repairs
(12) Patching Defective Concrete Finishes
(13) Conduit and Pipes Embedded in Concrete
(14) Hazardous Materials Notification
(15) LEED Submittals

1. **Submittal Schedule: The contractor shall submit for approval a schedule at least twenty (20) working days prior to commencing submittals.**

   a) This schedule shall include a list, in order of date to be submitted, of all drawings and other required submittal items scheduled to be submitted. The schedule shall list the proposed submittals for each week, as well as their formats. Once shop drawing submissions have commenced any modification or addition to this schedule must be submitted for approval at least twenty (20) working days before the modification or addition is proposed to take place.
   b) If at any time the total number of shop drawings received in any one week period exceeds the amount in the approved schedule by more than 10% for that week, the Design Professionals have the right to add two days to the average turnaround time for each 20% increment in excess of the scheduled quantity for that week's submissions. For example if the weekly total exceeds the schedule by 10% to 20%, two days may be added; if it is exceeded by 21% to 40%, four days may be added. The return dates for subsequent submittals may be extended based on the additional review time stated above.
   c) For the purposes of developing a schedule, assume the following review rate, Shop drawings – 10 full size sheets per week.

2. **Mix Designs: Submit concrete mix designs for each type and strength of concrete required for this Project at least thirty (30) days before placing concrete.**

   a) Mix designs shall be prepared or reviewed by an approved independent Testing Agency retained by the Contractor in accordance with requirements of ACI 301 and ACI 318, signed by a registered Design Professional licensed to practice as a Professional Engineer in the state where the project is located, and shall be coordinated with design requirements and Contract Documents.
   b) Before submitting to Owner's Testing Agency, submit complete mix design data for each separate mix to be used on the Project in a single submittal.

c) Provide a completed “Concrete Mix Design Submittal Form” (attached to the end of this Specification Section) for each proposed concrete mix.
d) Data shall be from the same production facility that will be used for this Project.
e) Mix Design data shall include but not be limited to the following:

i. Locations on the Project where each mix design is to be used corresponding to Structural General Notes on the Drawings.
ii. Design Compressive Strength: As indicated on the Drawings.
iii. Proportions: ACI 301 and ACI 318.
iv. Gradation and quality of each type of ingredient including fresh (wet) unit weight, aggregates sieve analysis.
v. Water/cementitious material ratio.
vi. Evaluate and classify fly ash in accordance with ASTM D 5759.
vii. Report chemical analysis of fly ash in accordance with ASTM C 618.
viii. Classify blast furnace slag in accordance with ASTM C 989.
ix. Slump: ASTM C 143.
x. Certification and test results of the total water soluble chloride ion content of the design mix - AASHTO T260 or ASTM C 1218.
xi. Air content of freshly mixed concrete by the pressure method, ASTM C 231, or the volumetric method, ASTM C 173.
xii. Unit Weight of Concrete: ASTM C 138.
xiii. Design strength at 28, 56 or 90 days, as indicated on Contract Documents: ASTM C 39.

(1) Document strength based on basis of previous field experience or trial mixtures per ACI 301. Proportioning by Water-Cement Ratio is not permitted.
(2) Submit strength test records, mix design materials, conditions, and proportions for concrete used for record of tests, standard deviation calculation, and determination of required average compressive strength.
(3) If early concrete strengths are required, Contractor shall submit trial mixture results as required.

xiv. Test records to support proposed mixtures shall be no more than 24 months old and use current cement and aggregate sources. Test records to establish standard deviation may be older if necessary to have the required number of samples.
xv. Manufacturer's product data for each type of admixture.

xvi. Manufacturer's certification that all admixtures used are compatible with each other.
xvii. All information indicating compliance with Contract Documents including method of placement and method of curing.
xviii. Normalweight Concrete: Density per ASTM C 138. Design the mix to produce the strength, modulus of elasticity and density as indicated on the Contract Documents.
xix. Lightweight Concrete: Density per ASTM C 138. Design the mix to produce the strength, modulus of elasticity and density as indicated on the Contract Documents.
xx. Certification from a qualified testing agency indicating absence of deleterious expansion of concrete due to alkali aggregate reactivity in accordance with ASTM C 33

3. **Hot and Cold Weather Procedures: Submit for record to Design Professional's written procedures for placement of concrete in hot and cold weather conditions. Hot and Cold weather are as defined in the Concrete Placement section of this** Specification.
4. **Product Data: Submit product data clearly marked to indicate all technical information which specifies full compliance with this section and Contract Documents, including published application instructions, product characteristics, compatibility and limitations for each of the following:**

a) Bonding agents.
b) Curing compound and liquid sealer densifier. Submit for record to Design Professionals a written statement guaranteeing that the compound will not leave discoloration on concrete to be left exposed, or affect the bond for paint or other applied finishes. Include provision in written statement that in the event of failure of applied finishes to bond to membrane cured concrete, to remove the curing compound and leave suitable surfaces for bonding such finishes.
c) Absorptive covers and moisture retaining covers.
d) Vapor Retarder: See Division 7, Thermal and Moisture Protection.
e) Self-leveling concrete topping.
f) Grout: Submittal of Grout not by manufacturers listed herein must be accompanied by independent certification of ASTM C 1107 compliance without modification of standard methods.
g) Other products proposed by Contractor

5. **Concrete Joint Locations: Submit plans indicating locations and details of construction joints, contraction joints,** waterstops, sleeves, embedments, etc. that interact with the joints. Contractor to coordinate joint location with reinforcement shop drawings. Reinforcement shop drawings shall indicate additional reinforcement bars where required at construction joints.

Joint locations for concrete slabs to receive a terrazzo or similar finish subject to reflective cracking must be coordinated with layout of finish drawings.

6. **Preconstruction Survey: Submit for record. Where interface with existing construction occurs, before related shop drawings are prepared survey the existing construction and submit the survey prepared by a professional surveyor employed by the Contractor to the Design Professionals.**
7. **Survey of Flat Plate or Flat Slab Concrete Floors during construction: Submit for record. Survey requirements are described on Drawings. Based on survey results, SER may propose adjustments to formwork and camber.**
8. **Survey of As-built Floor Conditions: Submit for** record. Survey and report flatness (F_F), levelness (F_L), and final elevations of finished floors prior to shoring removal. For slabs that include camber, do not test for levelness (F_L). Perform F_F/F_L testing in accordance with ASTM E 1155 requirements.
9. **Structural Repairs: Submit procedures and product information.** Alterations to design shall be signed & sealed by a licensed Professional engineer in the state in which the project is located.
10. **Patching Defective Concrete Finishes: Submit procedures and product information.**
11. **Conduit and Pipes Embedded in Concrete: Submit for approval layout of embedded conduit and pipes**.
12. **Hazardous Materials Notification: Submit for** record. In the event no product or material is available that does not contain hazardous materials as determined by the Owner, a "Material Safety Data Sheet" (MSDS) equivalent to OSHA Form 20 shall be submitted for that proposed product or material prior to installation.

B. Submittal Process

1. Submittal of shop drawings and other submittals by the Contractor shall constitute Contractor's representation that the Contractor has verified all quantities, dimensions, specified performance criteria, installation requirements, materials, catalog numbers and similar data with respect thereto and reviewed or coordinated each drawing with other Drawings and other trades. The Contractor shall place their shop drawing stamp on all submittals confirming the above.
2. Shop drawings: Submit in complete packages so that individual parts and the assembled unit may be reviewed together. This Specification Section and the applicable Drawings used in the development of the shop drawings shall be referenced on each shop drawing to facilitate checking.
3. The Contractor shall submit to the Design Professionals two (2) black line prints and one (1) electronic copy for shop drawing review. If the Contractor and Design Team agree to process shop drawings electronically, Contractor shall submit one electronic copy to the SER. The naming convention of each drawing must follow the submittal numbering system and include the submittal number, Specification

number, revision number and drawing number in the prefix of the drawing name.

4. The Contractor shall allow at least ten (10) working days between receipt and release by the SER for the review of shop drawings and submittals.
5. All modifications or revisions to submittals and shop drawings must be clouded, with an appropriate revision number clearly indicated. The following shall automatically be considered cause for rejection of the modification or revision whether or not the drawing has been approved by the Design Professionals:

    a) Failure to specifically cloud modifications
    b) Unapproved revisions to previous submittals
    c) Unapproved departure from Contract Documents

6. Resubmittals: Completely address previous comments prior to resubmitting a drawing. Resubmit only those drawings that require resubmittal. Do not include new content not previously reviewed.
7. Resubmittals Compensation: The Contractor shall compensate the Design Professionals for submittals that must be reviewed more than twice due to Contractors' errors. The Contractor shall compensate the Design Professionals at standard billing rates plus out-of-pocket expenses incurred at cost + 10%.
8. The Contractor shall deliver to the Design Professionals at the completion of the job two (2) copies of the electronic version of the final as-built shop drawings on a CD-ROM or other media acceptable to the Design Professionals.

C. SER Submittal Review

1. The Design Professionals' review and approval of shop drawings and other submittals shall be for general conformance with the design intent of the work and with the information given in the Contract Documents only and will not in any way relieve the Contractor or the Contractor's Engineer from:

    a) Conforming to the Contract Documents.
    b) Coordination with other trades.
    c) Responsibility for all required detailing and proper fitting of construction work.
    d) The necessity of furnishing material and workmanship required by Drawings and Specifications which may not be indicated on the shop drawings.
    e) Control or charge of construction means, methods, techniques, sequences or procedures, for safety precautions and programs in connection with the work.

2. TYPE 1 Stamp - For shop drawings for building elements designed by the SER, the responses on the shop drawing review stamp used by the SER require the following actions:

    a) APPROVED indicates that the SER has found that the information presented on the shop or erection drawing appears to conform to

the requirements of the Contract Documents. Fabrication, manufacture or construction of the elements of work shown in the shop drawing may proceed, provided that work is in compliance with the Contract Documents.

b) APPROVED AS NOTED indicates that the SER requires the shop or erection drawing to be corrected to reflect the notes and comments shown. Fabrication, manufacture or construction of the elements of work shown in the shop drawing may proceed, provided that work is in compliance with the notations shown on the shop drawings and the Contract Documents. Promptly resubmit the corrected shop or erection drawing for record.

c) REVISE and RESUBMIT indicates that the SER requires resubmission of the shop or erection drawing after correction per notes and comments. None of the elements of work shown on the shop drawing shall be fabricated, manufactured or constructed until the Contractor has received a returned shop drawing marked Approved or Approved as Noted.

d) NOT APPROVED indicates that the shop or erection drawing does not conform to the Contract Documents and must be extensively revised before re-submittal. None of the elements of work shown on the shop drawing shall be fabricated, manufactured or constructed until the Contractor has received a returned shop drawing marked Approved or Approved as Noted.

3. TYPE 2 Stamp - For submittals for building elements which are not designed by the SER but are performance specified, for items that do not form part of the completed structural system but impose loads on the structure, and for construction items or activities which have an effect on the final structure, a second stamp will be used. The responses on the stamp used by the SER require the following actions:

a) NO EXCEPTION TAKEN indicates that the SER has found that the information presented on the submittal appears to conform to the requirements of the Contract Documents. Fabrication, manufacture or construction of the elements of work shown in the shop drawing may proceed, provided that work is in compliance with the Contract Documents.

b) EXCEPTIONS NOTED indicates that the SER requires the submittal be corrected to reflect the notes and comments shown. Fabrication, manufacture or construction of the elements of work shown in the shop drawing may proceed, provided that work is in compliance with the notations shown on the shop drawings and the Contract Documents. Promptly resubmit the corrected document for record.

c) REJECTED indicates that the SER requires resubmission of the submittal after correction per notes and comments. None of the elements of work shown on the shop drawing shall be fabricated, manufactured or constructed. Contractor to revise and resubmit until SER response of No Exceptions or Exceptions Noted is received.

D. Substitution Request

1. Requests for any departure from Contract Documents must be submitted in writing by the Contractor and accepted in writing by the Design Professionals, prior to receipt of submittals.
2. All substitutions must be requested using the structural substitution request form included at the end of this section. Acceptance using the structural substitution request form indicates acceptability of the structural concept only. Contractor must submit shop drawings reflecting accepted substitutions for review in accordance with this Specification. The structural substitution request form, even if accepted, does not constitute a change order.
3. Accepted substitutions or modifications shall be coordinated and incorporated in the work at the sole expense of the Contractor.
4. The acceptance by the Design Professionals of a specific and isolated request by the Contractor to deviate from these requirements does not constitute a waiving of that requirement for other elements of, or locations in the project, unless specifically addressed as such and permitted by the Design Professionals in writing.
5. Compensation for Additional Services: Should additional work by Design Professionals such as design, drafting, meetings and/or visits be required which are necessitated for the review and/or incorporation of the Contractor-requested substitution, including indirect effects on other portions of the work, the Contractor is responsible for paying for additional work performed by the Design Professionals at the standard billing rates plus out-of-pocket expenses incurred at cost + 10%. Additional costs for testing and inspection by the Owner shall also be compensated by the Contractor.
6. Contractor is responsible for means and methods and any impacts on other portions of the work that may arise from this substitution.

E. Request for Information (RFI)

1. RFIs shall be submitted by the Contractor. RFIs submitted by other entities will be returned with no response.
2. Limit RFI to one subject.
3. Submit RFI immediately upon discovery of the need for interpretation or clarification of the Contract Documents. Submit RFI within timeframe so as not to delay the Construction Schedule while allowing the full response time described below.
4. The response time for answering an RFI depends on the category in which it is assigned.

    a) Upon receipt by the SER, each RFI will be assigned to one of the following categories:

        i. No cost clarification
        ii. Shown in Contract Documents
        iii. Change to be issued in future document revision
        iv. Previously answered
        v. Information needs to be provided by others.

vi. Request for corrective field work
vii. Request for substitution

b) RFIs in categories 1, 2, 3, 4 and 5 will be turned around by the SER on average of five (5) working days.
c) RFIs in categories 6 and 7 will be rejected and must be submitted as submittals or requests for substitution.

1.7 DELIVERY, STORAGE, AND HANDLING

A. Comply with General Conditions and Division 1.

B. Storage:

1. Store materials in accordance with ACI 304R.
2. Store cement in weather-tight buildings, bins or silos that will exclude moisture and contaminates.
3. Store admixtures to avoid contamination, evaporation, damage, and in accordance with manufacturer's temperature and other recommendations.
4. Keep packaged material in original containers with seals unbroken and labels intact until time of use.

C. Handling:

1. Handle fine and coarse aggregates as separate ingredients.
2. Arrange aggregate stockpiles to avoid excessive segregation, and prevent contamination with other materials or with other sizes of like aggregates.
3. Do not use frozen or partially frozen aggregates.
4. Allow sand to drain until it has reached relatively uniform moisture content before use.
5. Protect liquid admixtures from freezing and temperature changes that would adversely affect characteristics, and in accordance with manufacturer's recommendations.

1.8 PRE-INSTALLATION CONFERENCE

A. At least 30 working days prior to the start of concrete construction, the Contractor shall hold a meeting to review the approved concrete mix designs and to determine the procedures for producing proper concrete construction. The Contractor shall notify the Design Professionals of the meeting and require responsible representatives of every party who is concerned with the concrete Work to attend the conference, including but not limited to the following:

1. Contractor.
2. Owner’s Testing Agency representative
3. Concrete Subcontractor.
4. Ready-mix concrete producer.
5. Admixture manufacturer(s).

B. Minutes of the meeting shall be recorded and distributed by the Contractor to all parties concerned within five working days of the meeting. One copy of the minutes shall also be furnished to the following:

1. Design Professionals.
2. Owner's Representative.

C. The minutes shall include a statement by the concrete contractor and admixture manufacturer(s) indicating that the proposed mix design and placing, finishing, and curing techniques can produce the concrete properties and quality required by these Specifications.

1.9 QUALITY ASSURANCE BY OWNER'S TESTING AGENCY

A. Quality assurance is testing and inspection to assist the Owner in evaluating the Contractor's performance.

B. Cost: Except as specifically noted otherwise, the testing agencies for quality assurance shall be engaged and paid by the Owner.

C. Coordination with Owner's Testing Agency: The Contractor shall have sole responsibility for coordinating their work with the testing agency to assure that all test and inspection procedures required by the Contract Documents and Public Agencies are provided. The Contractor shall cooperate fully with the Owner's Testing Agency in the performance of their work and shall provide the following:

1. Information as to time of starting field construction and concrete placement schedule, one week prior to the beginning of the work
2. Site File: At least one copy of each approved shop drawing shall be kept available in the Contractor's field office. Drawings not bearing evidence of approval and release for construction by the Design Professionals shall not be kept on the job.
3. Full and ample means of assistance for testing and inspection of material
4. Proper facilities, including scaffolding, temporary work platforms, safety equipment etc., for inspection of the work in shop and field

D. Duties of the Owner's Testing Agency:

1. Reports: The Testing Agency shall prepare daily reports of the concrete work including progress and description/area of work, tests made and results. The daily reports shall be collected and delivered to the Design Professionals and Owner weekly.
2. Rejection: The Owner's Testing Agency has the right to reject any material, at any time, when it is determined that the material or workmanship does not conform to the Contract Documents. The Testing Agency shall report deficiencies to Owner, Design Professionals, and Contractor immediately.
3. Remedial Work: The Testing Agency shall indicate to the Contractor where remedial work must be performed and will maintain a current list of work not in compliance with the Contract Documents. This list shall be submitted to the Design Professionals and Owner on a weekly basis.

4. Certification: When all work has been approved by the Testing Agency, the Testing Agency shall certify in a letter to the Design Professionals and Owner that the installation is in accordance with the design and Specification requirements.

E. Field Quality Assurance

1. General: The Owner's Testing Agency shall test and inspect concrete materials and operations as Work progresses. Failure to detect any defective work or material shall not in any way prevent later rejection when such defect is discovered nor shall it obligate the Design Professional for final acceptance.
2. Owner's Testing Agency is responsible for monitoring concrete placement as follows:

    a) Owner's Testing Agency shall provide qualified personnel at site to monitor concreting operations as follows:

        i. Verify use of required design mix
        ii. Record location of point of concrete discharge of each batch truck tested, cross referenced to grid lines.
        iii. Record temperature of concrete at time of placement.
        iv. Record weather conditions at time of placement, including temperature, wind speed, relative humidity, and precipitation.
        v. Record types and amounts of admixtures added to concrete batches, including that added after departure of concrete trucks from batch plant at the project site.
        vi. Record amounts of and monitor dosing of high-range water-reducing admixtures added at site for site-added admixtures and redosing for plant-added admixtures.
        vii. Record amount of water added at the site and verify that total water content does not exceed amount specified in the mix design. Addition of water at the site is subject to prior approval by the Design Professional.
        viii. Monitor consistency and uniformity of concrete.
        ix. Monitor preparation for concreting operations, placement of concrete, and subsequent curing period for conformance with Specifications for following procedures:

            (1) Concrete curing.
            (2) Hot weather concreting operations.
            (3) Cold weather concreting operations.

3. Owner's Testing Agency shall conduct tests of concrete as follows and in accordance with ASTM C 1077:

    a) Testing frequency: Sample sets for all tests listed below of each concrete design mix placed each day shall be taken not less than once a day, nor less than once for each 50 cubic yards. (40 cubic meters) of concrete, nor less than once for each 2500 square feet (250 square meters) of surface area for slabs or walls. Additional

tests shall be performed if deemed necessary by the Owner's Testing Agency and Design Professionals. In addition, sample each truckload used for columns, regardless of other frequencies listed above.

b) Obtain each test sample from different batches selected on a strictly random basis before commencement of concrete placement. Record location in structure of sampled concrete.

c) Determine air content of normalweight concrete in accordance with either ASTM C 231 or ASTM C 138. Determine air content of lightweight concrete in accordance with ASTM C 173.

d) Determine unit weight of normalweight concrete in accordance with ASTM C 138 and lightweight concrete in accordance with ASTM C 567.

e) Conduct one test for air content for each strength test required or for every 50 cubic yards (40 cubic meters) of fly ash concrete placed, whichever is less. Test in accordance with ASTM C 173 or ASTM C 231.

f) The water content of freshly mixed concrete will be tested on a random basis, a minimum of once per 100 cubic yards (75 cubic meters) or every 5000 square feet (500 square meters) of concrete placement, during placement in accordance with AASHTO T 318 for the following concrete types:

   i. Architecturally exposed hard troweled slabs
   ii. Slab to receive a bonded finish floor material
   iii. Slabs with specified concrete compressive strength exceeding 6000 psi (42MPa)

g) Conduct slump tests in accordance with ASTM C 143.

h) Conduct slump tests for concrete enhanced with high-range water-reducing admixtures as follows:

   i. Concrete with plant added high-range water-reducing admixtures shall be sampled immediately upon arrival at job site. Batches delivered to site with slumps in excess of the range defined in the mix design submittal or with excessive segregation as defined in the ACI Manual of Standard Practice Part I shall be rejected.
   ii. Concrete with site added high-range water-reducing admixtures shall be sampled immediately upon arrival at job site and after addition of high-range water-reducing admixtures for conformance to initial water slump and final slump requirements.
   iii. Concrete shall also be sampled at point of initial discharge for conformance to slump and/or slump-flow requirements. Visually observe slump-flow at point of concrete placement. If slump loss is visually observed to exceed the range specified for mix design, perform additional slump test at point of discharge from concrete pump hose.

i) Conduct slump tests for Self Consolidating Concrete (SCC) as follows

i. In accordance with ACI 237, where SCC is used, perform slump flow and visual stability index tests in accordance with ASTM C1611 on the first batch of SCC, and then consecutive batches until two consecutively produced batches are within specification. SCC with a visual stability index value of 2 or 3 shall be stabilized, where possible, with a viscosity modifying admixture or rejected at the discretion of the Engineer and Ready Mix Quality Control Representative. The Ready Mix Producer shall be responsible for adjusting the mix to provide desired flow and stability. After establishing the consistency of the SCC mix, testing shall continue in accordance with the requirements of the above paragraph.

ii. In accordance with ACI 237, where SCC is used, perform slump flow tests in accordance with ASTM C1621 using a J-ring to determine the passing ability of the SCC mix around reinforcement. If the reinforcing bars retain the coarse aggregates inside the ring, the mixture has a high potential for blocking and should be reproportioned at the direction of the Engineer and Ready Mix Quality Control Representative.

iii.

j) Conduct strength tests of concrete as follows:

i. Secure sample sets in accordance with ASTM C 172.

ii. Mold cylinders in accordance with ASTM C 31 and cure under standard moisture and temperature conditions in accordance with ASTM C 31, Section 7 (a). Quantity of cylinders listed below is based on a cylinder size of 4 inch (100mm) diameter x 8 inches (200mm) long. If 6 inch (150mm) diameter by 12 inch (300mm) long cylinders are used, the total quantity of cylinders may be reduced by one with two cylinders instead of three tested at the age designated for determination of f'c.

iii. Test cylinders in accordance with ASTM C 39. For specified concrete strength of 10,000 psi (70MPa) and above, cylinders shall be ground and not capped.

iv. For 28 day mixes mold six cylinders. Test two cylinders at seven days and three cylinders at 28 days. The 28 day strength shall be the average of the three 28 day cylinders. One cylinder shall be retained in reserve for later testing if required.

v. For 56 day mixes mold seven cylinders. Test one cylinder at seven days, two cylinders at 28 days, and three cylinders at 56 days. The 56 day strength shall be the average of the three 56 day cylinders. One cylinder shall be retained in reserve for later testing if required.

vi. For 90 day mixes mold eight cylinders. Test one cylinder at seven days, one at cylinder at 28 days, two cylinders at 56 days, and three cylinders at 90 days. The 90 day strength shall be the average of the three 90 day cylinders. One cylinder shall be retained in reserve for later testing if required.

vii. When high early strength concrete is required by Contractor, additional cylinders shall be made and tested as required at Contractor's expense.

viii. If one cylinder in a test manifests evidence of improper sampling, molding or other damage, discard cylinder and base test results on that of remaining cylinder.

4. Owner's Testing Agency shall evaluate concrete for conformance with Specifications as follows:

a) Slump:

i. Owner's Testing Agency shall maintain a slump moving average, comprised of the average of all batches or most recent five (5) batches tested, whichever is fewer.

b) Strength test:

i. Owner's Testing Agency shall maintain a compressive strength moving average, comprised of three (3) consecutive strength test results, for each mix design used in Work.

ii. Strength level of concrete will be considered satisfactory provided averages of all sets of three (3) consecutive strength test results (i.e. moving average) equal or exceed specified 28-day strength, and no individual strength test result falls below specified 28-day strength by more than 500 psi (3.5MPa).

iii. If strength tests fail to meet minimum requirements, concrete represented by such tests shall be considered questionable and shall, if deemed appropriate by the SER, be subject to further evaluation by core testing as specified herein.

c) Conduct core tests on questionable concrete in accordance with ACI 318 and ASTM C 42.

i. Location of cores shall be coordinated with Design Professionals so as to least impair strength of structure. Before testing cores, discard and replace any that show evidence of having been damaged subsequent to or during removal from structure or which have reinforcement present.

ii. Cores from structure exposed to soil or constant moisture in service (e.g. basement walls, retaining walls, slab-on-grade, piers, footings, etc.) shall be tested in a fully

saturated condition. Cores for all other concrete may be tested dry. Prior to commencement of coring, verify with Design Professionals whether cores are to be tested wet or dry.

iii. Fill core holes with low slump concrete or mortar with a strength equal to or greater than that specified for area cored.

d) Concrete in area represented by core test will be considered adequate if average strength of cores is equal to at least 85% of, and if no single core is less than 75% of specified strength.

5. Floor flatness and levelness tolerance compliance testing is to be performed within 72 hours of concrete placement by Owner's Testing Agency, and prior to the removal of shores and forms.

F. Owner's Testing Agency shall submit inspection, observation, and/or test reports to the Owner and Design Professionals, as required herein and shall provide an evaluation statement in each report stating whether or not concrete placement conforms to requirements of Specifications and Drawings and shall specifically note deviations therefrom.

G. Immediately report deficiencies to the Contractor, Owner and Design Professionals.

1.10 QUALITY CONTROL BY CONTRACTOR

A. The Contractor shall provide a program of quality control to ensure that the minimum standards specified herein are attained.

B. The Owner's general review during construction and activities of the Owner' Testing Agency are undertaken to inform the Owner of performance by the Contractor but shall in no way replace or augment the Contractor's quality control program or relieve the Contractor of total responsibility for quality control.

C. The Contractor shall immediately report to the Design Professionals any deficiencies in the work which are departures from the Contract Documents. The Contractor shall propose corrective actions and their recommendations in writing and submit them for review by the Design Professionals. After proposed corrective action is accepted by the Design Professionals and Owner, the Contractor shall correct the deficiency at no cost to the Owner. Where the Contractor requests that the Design Professionals develop the corrective actions or review corrective actions developed by others, the Design Professional shall be compensated as outlined in the OBSERVATIONS AND CORRECTIONS BY DESIGN PROFESSIONALS section of this Specification.

D. Where SCC is used, the Ready Mix Producer shall have a Quality Control Representative on site during placements until mix consistency and stability is established.

1.11 OBSERVATIONS AND CORRECTIONS BY DESIGN PROFESSIONALS

A. Observations: The Design Professionals will observe the construction for general compliance with the provisions of the Contract Documents during various phases of construction.

B. Corrections by Design Professionals: See Part 3 - CORRECTIVE MEASURES section of this specification.

1.12 PERMITS AND WARRANTY

A. Permits: The Contractor shall apply for, procure, renew, maintain, and pay for all permits required by City, State, or other governing authorities, necessary to execute work under this Contract. Contractor shall furnish copies of all permits to the Owner and Design Professionals.

B. Warranty: Comply with General Conditions, agreeing to repair or replace specified materials or Work that has failed within the warranty period. Failures include but are not limited to the following:

1. Oily, waxy or loose residue which may interfere with the bonding or discoloration of various applied Architectural finish materials.
2. Discoloration of concrete surfaces scheduled to remain exposed as a finish.
3. Areas which show surface failure or defects.
4. Areas which puddle water.
5. Areas which are not properly prepared to receive Architectural finish materials. If necessary, the Contractor, at his own expense, shall have the Owner’s Testing Agency perform appropriate tests for bond and discoloration.
6. Patches that become crazed, cracked or sound hollow when tapped.
7. Self-leveling concrete topping that has cracked, spalled and/or not performed in accordance with manufacturer's design criteria.

PART 2 - PRODUCTS

2.1 CONCRETE MATERIALS & PRODUCTION

A. Portland Cement:

1. ASTM C150, Type I or Type II
2. ASTM C150, Type III, High-early Strength Portland Cement may be used subject to review and approval of Structural Engineer. The specified 28-day concrete compressive strength shall occur within 7 days for concrete using Type III Portland Cement.
3. Provide the same brand of Portland Cement from a single source throughout the project, as required to meet Design Professionals’ requirements.

B. Aggregates for Normalweight Concrete:

1. ASTM C 33
2. Fine Aggregate: Natural sand, or sand prepared from stone or gravel, clean, hard, durable, uncoated and free from silt, loam and clay.
3. The acceptability of aggregates for the work will depend on proof that their potential alkali reactivity is not deleterious to the concrete.
4. Do not use fine or coarse aggregates that contain substances that cause spalling.
5. Maximum coarse aggregate size shall conform to the requirements as specified in ACI 301 but shall not exceed the following:.

   Size no. 57 (25mm max) for footings, drilled piers and caissons
   Size no. 67 (20mm max) for all other locations
   Size no. 467 or 457 for non-reinforced concrete at locations noted on Drawings.

6. Contractor shall furnish concrete with maximum 3/8" (10mm) aggregate at no additional cost to the Owner if areas of high reinforcement density require it for placement and consolidation.

C. Aggregates for Lightweight Concrete:

1. ASTM C 330.
2. Classification of Aggregates: As required to meet Design Professional's requirements.
3. Provide aggregates from a single source throughout the project for exposed concrete.
4. Aggregate shall contain the minimum absorbed moisture content recommended by the manufacturer for the project prior to batching.
5. Maximum coarse aggregate size shall conform to the requirements as specified in ACI 301 but shall not exceed ¾" (20mm)

D. Water: ASTM C 94. Clean, and free from injurious amounts of oil, acids, alkali, salts, organic material, or other deleterious materials.

E. Supplementary Cementitious Material

1. Fly Ash:

   a) ASTM C 618, Class C or Class F.
   b) Shall not be used unless part of an approved mix design.
   c) Limit Loss on Ignition to 2.5%

2. Ground Granulated Blast-furnace Slag (GGBFS)

   a) ASTM C 989.
   b) Shall not be used unless part of an approved mix design.

3. Silica Fume (Microsilica):

   a) ASTM C 1240
   b) Acceptable Product: W. R. Grace "Force 10,000 D"
   c) Acceptable Product: Euclid Chemical Company "Eucon MSA"

d) Acceptable Product: BASF “MasterLife SF 100”
e) Acceptable Product: Sika Corporation “Sikacrete 950 DP”

4. For concrete subject to Exposure Class F3 conditions as defined in ACI 318, Table 4.2.1, limit the maximum content of supplementary cementitious materials to values shown in ACI 318, Table 4.4.1.
5. The exact percentages used shall be based on successful test placement on site. Resubmit mix design if percentages change based on test placement.
6. The fly ash or natural pozzolan supplier shall have an effective quality control program in place to guard against contamination of the fly ash and assure compliance with Specifications.
7. Fly ash and GGBFS used shall be from one source throughout the project. Substitution of sources will be acceptable only if testing of concrete mixes containing the substituted material show similar test results and if the color of concrete produced with the substituted material matches the color of previously poured concrete to the satisfaction of the Architect.

F. Ready Mixed Concrete:

1. Shall be batch-mixed and transported in accordance with ASTM C 94.

G. Self-Consolidating Concrete:

1. Produce in accordance with ACI 237R.
2. Perform the following tests and provide report prior to submitting mix design:

a) Resistance to Segregation: Achieve a maximum static segregation percentage of 15% when tested according to ASTM C 1610 with a VSI index of 1 maximum.
b) Slump Flow: ASTM C 1611 within a range of 20”-30” (500mm–750mm).
c) Passing Ability: ASTM C 1621 with a maximum difference of 2” (50mm) between testing with and without the J-Ring.

2.2 CONCRETE MIX DESIGN

A. Concrete Strength:

1. Shall be as indicated on the Structural Drawings

B. Concrete Density (Unit Weight):

1. Shall be as indicated on the Structural Drawings

C. Air Entrainment

1. For concrete exposed to freeze/thaw cycles and/or deicing chemicals (Exposure Classes F1, F2, F3), and concrete intended to be watertight,

provide entrained air content of 6% ± 1.5%, unless specified otherwise. This includes, but is not limited to, concrete at the following locations:

a) Concrete at the exterior of the structure with at least one surface exposed to weather, such as exterior face of grade beams, foundation walls, exterior walls and parapets, exposed columns and edge beams.
b) Concrete in parking garages.
c) Ramps and loading docks.
d) Balconies and terraces with no waterproof membrane.

2. For lightweight concrete less than 120 pcf (19 kN/m³) density, air content may be up to 7% regardless of exposure condition.
3. For concrete with a specified compressive strength (f'c) greater than 5000 psi (35MPa), required air content may be reduced to 5% ± 1.5%.
4. Entrained air content noted above shall occur at point of delivery.
5. No entrained air content is required in concrete placed in the foundation with no surface exposed to weather.
6. All interior steel trowel finished, normalweight slabs shall have a maximum air content of 3%.

D. Water-Cementitious Materials (W/cm) Ratio for Normalweight Concrete

1. Unless lower limits are stated in the Contract Documents, all concrete exposed to freezing and thawing in moist condition (Exposure Classes F1 and F2) and/or required to be watertight shall have a maximum W/cm ratio of 0.45 and a minimum f'c=4500 psi .
2. All concrete exposed to deicing salts, brackish water seawater or spray from these sources (Exposure Class F3) shall have a maximum W/cm ratio of 0.40 and a minimum f'c=4500 psi.
3. Absent the above conditions, all concrete with required strength of 4000 psi (28MPa) or higher shall have a maximum W/cm ratio of 0.50.
4. The water-cementitious materials ratio shall not exceed values indicated, including any water added to meet specified slump in accordance with the requirements of ASTM C 94.
5. Weight of fly ash or pozzolanic admixtures shall be included with the weight of cementitious materials used to determine the water-cementitious materials ratio.

E. Slump

1. Concrete design mixes shall be proportioned to meet the following slump limitations. Slump should be measured as described in the Owner's testing agency responsibilities:

a) Concrete with high range water-reducing admixture: Concrete slump prior to addition of high range water-reducing admixture shall not exceed 3" (75mm) for normalweight concrete and 4" (100mm) for lightweight concrete. After addition of water-reducing admixture, the concrete shall have a maximum slump of 9" (225mm) unless otherwise approved by the SER.

b) Concrete without a water-reducing admixture: Slump shall not exceed 4”.

F. Self-Consolidating Concrete Slump/Flow: Use for architectural concrete and heavily reinforced areas where indicated on the plans, and where conventional mixtures do not provide adequate consolidation. Minimum slump/flow diameter of 20” (500mm) or as required by the successful test placement onsite, which shall verify proper workability, finish, and setting time. All self-consolidating concrete shall contain the specified high range water-reducing admixture. All self-consolidating concrete shall contain viscosity modifying admixture as required unless proper quantity and grading of fines can be achieved.

1.

G. Chloride Ion Content

1. The total water-soluble chloride ion content of the mix including all constituents shall not exceed the limits defined in ACI 318 4.3 unless corrosion inhibiting admixtures are added to the mixture to offset the additional chloride.
2. If the specified level of water-soluble chloride ion content cannot be maintained, appropriate level of corrosion inhibiting admixture shall be added to the mix in accordance with the manufacturer’s recommendation to offset the excess amount of chloride at no additional cost to the Owner.

2.3 ADMIXTURES

A. General:

1. Admixtures specified below can be used only when established in the mix design with Design Professionals' prior written approval.
2. Each admixture approved by Design Professionals shall be used in strict compliance with manufacturer's published instructions.
3. Concrete supplier shall certify all admixtures to be compatible with each other. (See Submittals Section in Part 1)

B. Air Entraining Admixture:

1. ASTM C 260
2. Acceptable Product: BASF "MasterAir AE 200”" or “MasterAir -AE 90”
3. Acceptable Product: W. R. Grace “Darex Series” or “Daravair Series”
4. Acceptable Product: Euclid Chemical Company “AEA –92 or Air 40”
5. Acceptable Product: Sika Corporation “Sika Air Series” or “Sika AEA Series”

C. Water-Reducing Admixture:

1. ASTM C 494, Type A
2. Acceptable Product: BASF’ "MasterPozzolith 210”
3. Acceptable Product: Euclid Chemical Company “EUCON NW” or “EUCON WR 91”

4. Acceptable Product: W. R. Grace “WRDA’ Series, Zyla Series or “Mira” Series
5. Acceptable Product: Sika Corporation “Plastocrete Series”

D. Retarding Admixture:

1. ASTM C 494, Type B
2. Acceptable Product: BASF “Masterset R 100”
3. Acceptable Product: Euclid Chemical Company “EUCON RETARDER 100”
4. Acceptable Product: W. R. Grace “Daratard 17”
5. Acceptable Product: Sika Corporation “Plastiment Series”

E. Non Corrosive Accelerating Admixture:

1. ASTM C 494, Type C
2. Acceptable Product: BASF "POZZUTEC 20” or “Masterset NC 534”
3. Acceptable Product: Euclid Chemical Company “ACCELGUARD 80”, “ACCELGUARD NCA” or “ACCELGUARD 90”
4. Acceptable Product: W. R. Grace “Daraset” Series, “Polarset”, or “DCI”
5. Acceptable Product: Sika Corporation “Sikaset NC” or “Plastocrete 161 FL” or “Sika Rapid-1”

F. Water-Reducing and Retarding Admixture:

1. ASTM C 494, Type D
2. Acceptable Product: BASF “Masterset R 100”
3. Acceptable Product: Euclid Chemical Company “EUCON RETARDER 75” or “EUCON DS”
4. Acceptable Product: W. R. Grace “Daratard 17” or “Recovery Series”
5. Acceptable Product: Sika Corporation “Plastiment Series”

G. Water-Reducing and Accelerating Admixture:

1. ASTM C 494, Type E
2. Acceptable Product: BASF "Masterset FP 20”
3. Acceptable Product: Euclid Chemical Company “ACCELGUARD 80” or “ACCELGUARD 90”
4. Acceptable Product: W. R. Grace “Libricon NCA”
5. Acceptable Product: Sika Corporation “Sikaset NC” or “Plastocrete 161 FL”

H. Mid-Range Water-Reducing Admixture:

1. ASTM C 494, Type A
2. Acceptable Product: BASF “MasterPolyheed Series”
3. Acceptable Product: W. R. Grace “Daracem” or “Mira”
4. Acceptable Product: Sika Corporation “Sikaplast Series” or “Sikament Series”
5. Acceptable Product: Euclid Chemical Company: “Eucon MR” or “Eucon MRX”

I. High-Range Water-Reducing Admixture:

1. ASTM C 494, Type F
2. Acceptable Product: BASF "PS 1466" or “MasterGlenium Series”
3. Acceptable Product: Euclid Chemical Company “EUCON 37” or “PLASTOL SERIES”
4. Acceptable Product: W. R. Grace “Daracem” or “ADVA” Series
5. Acceptable Product: Sika Corporation “Viscocrete Series” or “Sikament Series”

J. High-Range Water-Reducing and Retarding Admixture:

1. ASTM C 494, Type G
2. Acceptable Product: Euclid Chemical Company “EUCON 537”
3. Acceptable Product: W. R. Grace “Daracem Series” or “Adva Series”
4.

K. Viscosity Modifying Admixture (VMA) for Self-Consolidating Concrete (SCC):

1. Acceptable Product: BASF “MasterMatrix VMA Series””
2. Acceptable Product: W.R. Grace “V-MAR3”
3. Acceptable Product: Euclid Chemical Company “EUCON ABS” or “EUCON WO” or “Visctrol”
4. Acceptable Product: Sika Corporation “Sika Stabilizer Series”

L. Corrosion Inhibiting Admixtures:

1. Calcium Nitrite Based: ASTM C 494, Type C, 30% + 2% solution

   a) Acceptable Product: W.R. Grace “DCI or DCI-S’
   b) Acceptable Product: Euclid Chemical Company “EUCON CIA”
   c) Acceptable Product: Sika Corporation “Sika CNI”

2. Amine Carboxylate Based: ASTM C 1582, which includes ASTM C-494 amine carboxylate

   a) Acceptable Product: Cortec Corporation “MCI 2005”, “MCI 2005 NS”, ”MCI 2006” or “MCI 2006 NS”

3. Amino Alcohol Based:

   a) Acceptable Product: Sika Corporation “Sika FerroGard 901”

M. Shrinkage Reducing Admixtures:

1. ASTM C 157
2. Acceptable Product: W.R. Grace “Eclipse 4500” (for use with air-entrained concrete exposed to freeze/thaw), or “Eclipse Floor 200”
3. Acceptable Product: Euclid Chemical Company “EUCON SRA” or “Conex”

2.4 **FIBER REINFORCEMENT**

A. **General:**

1. **Fiber reinforcement specified below can be used only with Design Professional's prior written approval.**
2. **See Drawings for location of Fibers.**
3. **Where macro synthetic fiber reinforcement is proposed to replace welded wire reinforcement, Contractor shall demonstrate that proposed material and dosage rate provides equivalent performance to welded wire reinforcement indicated on Drawings.**
4. **Fiber reinforcement shall not replace reinforcing bars shown on Drawings.**

B. **Synthetic Fibrillated or Monofilament Micro Fibers (low volume synthetic used for reduction of plastic shrinkage)**

1. **ASTM C 1116, Type III**
2. **Acceptable Product: W.R. Grace "Grace Fibers", "Grace Microfibers"**
3. **Acceptable Product: Euclid Chemical Company "Fiberstrand 100 or Fiberstrand 150"**
4. **Acceptable Product: Sika Corporation "Sika Fiber PPM" or "Sika Fiber PPF" or Sika Fiber HP"**

C. **Macro Synthetic Fibers (high volume synthetics used for reduction of plastic and drying shrinkage cracking)**

1. **ASTM C 1116, Type III, minimum of 1.55 inches (40 mm) length, aspect ratio of 50 to 90. The fiber shall have a minimum average residual strength (ARS) of 200 psi (1.4MPa) measured as per ASTM C 1399/ASTM C 1609 "Test Method for Obtaining Average Residual Strength of Fiber-Reinforced Concrete".**
2. **Acceptable Product: W.R. Grace "Strux 90/40"**
3. **Acceptable Product: Euclid Chemical Company "Tuf-Strand SF"**
4. **Acceptable Product: Sika Corporation "Sika Fiber MS 20"**

D. **Carbon Steel Fibers (smooth or deformed)**

1. **ASTM C1116, Type 1 and A820**
2. **Acceptable Product: Bakaert Corporation's "Dramix 65/60"**
3. **Acceptable Product: Fiber con International, Inc's "Fibercon"**
4. **Acceptable Product: Sika Corporation "Sika Fiber S or Sika Fiber SH Series"**

2.5 ADHESIVES

A. Bonding Agent for Cured Concrete (existing concrete damp or dry, at least 28 days old, no surface water):

1. ASTM C 881 Type I and IV, Grade 3, Class B and C.
2. Acceptable Product: BASF "CONCRESIVE PASTE (LPL)", Class C Only

3. Acceptable Product: BASF “CONCRESIVE LIQUID (LPL)”, Class C Only for bonding topping
4. Acceptable Product: Euclid Chemical Company “EUCO #452 Epoxy System”
5. Acceptable Product: Euclid Chemical Company “DURALCRETE LV Series”
6. Acceptable Product: Euclid Chemical Company “FLEXOCRETE System” for bonding topping

B. Bonding Agent for Uncured Concrete: (existing concrete damp or dry, less than 28 days old, no surface water):

1. ASTM C 881, Type II and V, Grade 2, Class B and C.
2. Acceptable Product: Euclid Chemical Company “DURALCRETE MV System”
3. Acceptable Product: Sika Corporation “Sikadur 32 Hi-Mod”

C. Anti-Corrosive Epoxy Cementitious Bonding Compound and Corrosion Protection of Reinforcement (bonding agent for existing concrete saturated surface dry, no surface water):

This adhesive shall be a water-based epoxy/cementitious compound for adhesion and corrosion protection of reinforcing members (20 hour maximum open time).

1. Acceptable Products: Euclid Chemical Company “DURALPREP AC”
2. Acceptable Products: Sika Corporation “ARMATEC 110"

D. Adhesive Between Cured Concrete Elements:

1. ASTM C 881 Type I and IV, Grade 3, Class B and C
2. Acceptable Product Sika Corporation “Sikadur 31 Hi-Mod Gel (1:1 Mix Ratio)

2.6 CURING COMPOUNDS AND SEALERS

A. Interaction with finishes:

1. See architectural Drawings for finish material applied over concrete.
2. Use only curing and sealer compounds that are compatible with finish material.
3. Manufacturer's certification is required.
4. Where finish material is liquid rubberized asphalt, use only strippable type curing compound.

B. Curing and Sealing Compound (VOC Compliant, 350 g/l) :

1. ASTM C1315, Type I, Class A and ASTM C 309, Type 1, Class A or B
2. Water based acrylic, clear, 25% solids curing and sealing compound.
3. Acceptable Product: Euclid Chemical Company "Super Diamond Clear VOX"
4. Acceptable Product: Dayton Superior “Cure & Seal J22WB)

5. Acceptable Product: BASF (Sonneborn) “Kure 1315”
6. Acceptable Product: W.R. Meadows “VOCOMP-25”

C. Curing Compound-Dissipating/Strippable (VOC Compliant, 350 g/l):

1. ASTM C 309, Type I, Class A or B
2. Water based resin, clear curing compound that begins to dissipate when exposed to UV light and traffic.
3. Acceptable Product: Euclid Chemical Company “Kurez DR VOX” (Dissipating) or “Kurez RC” in combination with “Kurez RC-Off”(Strippable)
4. Acceptable Product: Dayton Superior “Clear Resin Cure J11W"
5. Acceptable Product: W.R. Meadows: “1100 Clear”

2.7 SEALERS

A. Surface Sealer:

1. ASTM C 309, Type I, Class A or B
2. Water based acrylic sealing compound.
3. Acceptable Product: Euclid Chemical Company “DIAMOND CLEAR VOX”
4. Acceptable Product: Dayton Superior “Cure & Seal 309 EF”
5. Acceptable Product: BASF ”MasterKure CC 200WB”
6. Acceptable Product: “W.R. Meadows “VOCOMP 20”

B. Liquid Densifier/Sealer:

1. The liquid densifier compound shall be a silicate based compound that penetrates and chemically hardens concrete surfaces.
2. Acceptable Product: Euclid Chemical Company “Euco Diamond Hard”
3. Acceptable Product: Dayton Superior “Densifier J13”
4. Acceptable Product: BASF ”MasterKure HD 200WB”
5. Acceptable Product: W.R. Meadows “Liqui-Hard”

2.8 DRY SHAKE HARDENERS

A. Mineral Aggregate Hardener:

1. The specified mineral aggregate hardener shall be formulated, processed and packaged under stringent quality control at the manufacturer's owned and controlled factory. The hardener shall be a factory-blended mixture of specially processed graded mineral aggregate, selected Portland cement and necessary plasticizing agents
2. Acceptable Product: Euclid Chemical Company, "Surflex" to be used with “Kurez DR VOX”
3. Acceptable Product: BASF, ”MasterTop 100 to be used with “Masterkure CC 200WB”
4. Acceptable Product: L&M Construction Chemicals “Ferrocon FF” to be used with “Dress & Seal WB 30”

B. Non-Oxidizing Metallic Hardener:

1. The specified non-oxidizing metallic floor hardener shall be formulated, processed and packaged under stringent quality control at the manufacturer's owned and controlled factory. The hardener shall be a mixture of specially processed non-rusting aggregate, selected Portland Cement and necessary plasticizing agents.
2. Acceptable Product: Euclid Chemical Company, "Diamond-Plate" to be used with "Kurez DR VOX"
3. Acceptable Product: BASF "MasterTop 210COR" to be used with "MasterKure CC 200WB"

2.9 MISCELLANEOUS CONCRETE PRODUCTS

A. Nonshrink Grout

1. Provide pre-packaged natural aggregate grout, high-precision, nonshrink, ready-to-use, complying with the following requirements:

   a) See General Notes for grout minimum compressive strength.
   b) Grout shall conform to ASTM C 1107

2. All material used including water, mixer and pre-packaged grout must be initially at the 45°F (7°C) and 90°F (32°C) limits when testing is initiated.
3. Acceptable Product: BASF "MASTERFLOW 928"
4. Acceptable Product: Euclid Chemical Company "HI-FLOW GROUT"
5. Acceptable Product: Five Star Products "Five Star Grout"
6. Acceptable Product: Sika Corporation "Sikagrout 328"

B. Self-Leveling Concrete Topping - Underlayment for Interior Applications:

1. Use self-leveling underlayment concrete formulated to level concrete floors without shrinking, cracking or spalling, and capable of being placed from feathered edge to 1" (25mm) thickness without aggregate in one pour. If greater than 1" (25mm) thickness is required, aggregate shall be used in accordance with manufacturer's requirements. Appropriate primer shall be utilized for all underlayment applications.
2. Acceptable Product: Ardex Engineered Cements "ARDEX K-15"
3. Acceptable Product: Euclid Chemical Company "Flo-Top or Super Flo-Top"
4. Acceptable Product: Sika Corporation "Sika Level Series"

2.10 MISCELLANEOUS PRODUCTS

A. Evaporation Retarder:

1. Acceptable Product: BASF "Masterkure ER50"
2. Acceptable Product: Euclid Chemical Company "Eucobar"
3. Acceptable Product: Sika Corporation "Sika Film"

B. Moisture-Retaining Covers:

Conforming to ASTM C171. A naturally colored, non-woven polypropylene fabric with a 4-mil non-perforated reflective (white) polyethylene coating containing

stabilizers to resist degradation from ultraviolet light. Fabric shall exhibit low permeability and high moisture retention.

1. Hydracure S-16 by PNA Construction Technologies, Inc., Matthews, NC
2. Transguard 4000 by Reef Industries (Armorlon Division), Incorporated, Houston TX

C. Sand Cushion: Clean, manufactured or natural sand.

D. Expanded Polystyrene (EPS) used as Fill - Geofoam

1. Material: Rigid, closed cell polystyrene blocks formed by expansion of polystyrene beads by steam.
2. Comply with the requirements of ASTM D 6817
3. Unless noted otherwise on the drawings, provide the following types of EPS:

    a) Fill between a lower slab and a raised slab area: EPS12 -2.2 psi (15 kPa) compressive resistance minimum at 1% deformation, 10 psi (70 kPa) flexural strength minimum
    b) Typical below interior floor slabs supported on grade (soil fill over EPS fill) or directly on EPS fill: EPS15 - 3.6 psi (25 kPa) compressive resistance minimum at 1% deformation, 25 psi (170 kPa) flexural strength minimum
    c) Fill below exterior floor slabs or slabs with truck loading: EPS19 - 5.8 psi (40 kPa) compressive resistance minimum at 1% deformation, 30 psi (200 kPa) flexural strength minimum

4. Thickness as indicated on Drawings.
5. Execution: Conform to manufacturer's instructions regarding preparation, installation and protection
6. Gripper plates shall be used as needed to restrain EPS from moving laterally in multi-layer applications
7. Contractor shall sequence soil or concrete topping placement to avoid EPS block shift or flotation.
8. Submit the following for review:

    a) Manufacturer's product literature including physical properties in compliance with ASTM D 6817 and type specified
    b) 10 year physical property warranty
    c) Proposed plan layout of fill blocks showing gaps between blocks where required for stabilizing and/or load bearing reinforced concrete ribs as shown on drawings, in details or in notes.

9. Submit the following for record:

    a) Summary of test compliance with specified performance characteristics and physical properties
    b) Product Certificates showing evidence of third party quality control

10. Acceptable product: Foam Control EPS Geofoam by AFM Corporation, Lakeville, MN

11. Acceptable product: EPS Geofoam by Styrotech, Brooklyn Park, MN
12. Acceptable product: EPS Geofoam by Universal Foam Products, Hunt Valley, MD
13. Acceptable product: EPS Geofoam by Dyplast Products, Miami, FL

E. Vapor Retarder: See Division 7, Thermal and Moisture Protection

1. **Minimum 15-mil thick polyolefin geomembrane**
2. **Manufactured with prime virgin resins**
3. **Water Vapor Retarder: ASTM E 1745, meets or exceeds Class A**
4. **Water Vapor Transmission Rate: ASTM E 96, 0.008 gr./ft2/hr. (0.086 gr./m²/hr) or lower**
5. **Permeance Rating: ASTM E 96, 0.03 Perms or lower for new material and after conditioning tests in accordance with applicable sections of ASTM E 154**
6. **Puncture Resistance: ASTM E 1745,minimum 2400 grams**
7. **Tensile Strength: ASTM E 1745, minimum 45.0 lbs./in (8.0 kg/cm).**
8. **Acceptable product: W.R.Grace, "Florprufe 120"**
9. **Acceptable product: W. R. Meadows, "Perminator"**
10. **Acceptable product: Stego Industry LLC, "Stego Wrap"**
11. **Acceptable product: Raven Industries, "Raven Vapor Block 15".**

F. Non-Slip Aggregate:

1. Abrasive aggregate shall be composed of an aluminum oxide abrasive bonded by a vitreous ceramic material. Use hard, homogeneous, non-glazing, rustproof aggregate which is unaffected by moisture or cleaning compounds.
2. Acceptable Product: Euclid Chemical Company "NON-SLIP AGGREGATE"
3. Acceptable Product: North Company "Alundum"
4. Acceptable Product: Anti-Hydro International "A-H A-2 Emery Shake-On" or "A-H Alox"

2.11 CONCRETE REPAIR MATERIALS

A. Polymer Repair Mortar

1. The following patching mortars may be used when color match of the adjacent concrete is not required. Prior approval by the Design Professionals is required.
2. Acceptable Products (Horizontal Repairs): Euclid Chemical Company "Thin Top Supreme or Tammspatch II" (for 1/16" (2mm) to 3/8" (10mm) thickness), or "Concrete Top Supreme" (for 3/8" (10mm) to 2" (50mm) thickness).
3. Acceptable Products (Horizontal Repairs): Sika Corporation "Sikatop 121 Plus" or "Sikatop 122 Plus".
4. Acceptable Products (Vertical and Overhead Repairs): Euclid Chemical Company "Verticoat", "Verticoat Supreme", or "Duraltop Gel"
5. Acceptable Products (Vertical and Overhead Repairs): Sika Corporation, "Sikatop 123 Plus".

6. Acceptable Products (Horizontal, Vertical and Overhead Repairs): BASF, “EMACO 100”

B. High Strength Flowing Repair Mortar

1. For forming and pouring structural members, or large horizontal repairs, provide the flowable one-part, high strength microsilica modified repair mortar with 3/8” (10mm) aggregate.
2. The product shall achieve 9000 psi (62MPa) @ 28-days at a 9-inch (225mm) slump.
3. Prior approval by the Design Professionals is required for cold weather applications
4. Acceptable Product: Euclid Chemical Company “Eucocrete”
5. Acceptable Product: BASF “EMACO S” Series
6. Acceptable Product: Sika Corporation “Sika Repair 211 SCC Plus”

C. Repair Topping

1. Latex and microsilica modified cementitious mortar topping, which meets or exceeds the bond strength requirements of ASTM C 1059.
2. Resistance to wear: The finished topping shall show a depth of wear of 0.2 mm (0.0079”) or less when tested at 28 days with a Chaplin Abrasion Tester.
3. Acceptable Products: Euclid Chemical Company, “Thin-Top Supreme or Tammspatch II”
4. Acceptable Product: Sika Corporation “Sika Repair 211 SC Plus”

D. Epoxy Injection:

1. ASTM C881, moisture insensitive maximum viscosity 350 cps at 77°F (25°C).
2. Acceptable Product: BASF “Concresive 1380”
3. Acceptable Product: Euclid Chemical Company “Eucopoxy Injection Resin”
4. Acceptable Product: Sika Corporation “Sikadur 35, LV, LPL”

E. Pressure-Injected Foam Resin:

1. Acceptable Product: DeNeef “HA Sealform”
2. Acceptable Product: 3M “ScotchSeal 5600”
3. Acceptable Product: Sika Corporation “SikaFix HH”

F. Semi Rigid Epoxy:

1. Acceptable Product: METZGER/McGUIRE “MM-80 Semi Rigid Epoxy Joint Filler”

G. Methyl Methacrylate (MMA)

1. Acceptable Product: Transpo Industries, Inc. “T-78 Methyl Methacrylate Polymer Crack Healer/Sealer”

H. Sealant:

1. Silicone or Polyurethane Sealant (as selected based on project requirements such as loading, traffic, bond, coatings, etc.).
2. Joint to be routed and cleaned per manufacturer's written directions.

I.

PART 3 - EXECUTION

3.1 PREPARATION

A. Subgrade:

1. Dampen subgrades not covered with membrane by sprinkling immediately before placing concrete.

   a) Omit when subgrade is already damp.

2. Do not place on water-saturated subgrade unless placing can be done without damage to subgrade (surface is stable) and loading the subgrade does not drive free water to the surface.
3. Do not place concrete on frozen ground.

B. Forms:

1. Coordinate with Section 031000 Concrete Formwork.
2. Remove dirt, sawdust, nails and other foreign material from formed space.
3. Dampen wood forms by sprinkling immediately before placing.
4. Cool metal forms by sprinkling immediately before placing.

C. Concrete Accessories:

1. Coordinate with Section 031000 Concrete Formwork.

D. Dewatering:

1. Remove water from concrete formwork.
2. Divert any flowing water to sump and remove by pumping.
3. Refer to Division 1 for additional dewatering requirements.

E. Vapor Retarder Placement: See Division 7, Thermal and Moisture Protection.

1. **Vapor retarder installation shall be in accordance with manufacturer's instructions and ASTM E 1643.**
2. **Place vapor retarder under slabs-on-grade in position with longest dimension parallel with direction of pour.**
3. **Joints: Lap 6" (150mm) minimum and seal with manufacturer's recommended mastic or pressure-sensitive tape.**
4. **Prevent damage to moisture barrier.**

5. **If moisture barrier is damaged, place a piece of moisture barrier over damaged area (6" (150mm) larger all around) and tape in place with type of tape recommended by moisture barrier manufacturer.**
6. **Seal laps and intersections of walls with compatible trowel mastic or pressure-sensitive sealing tape.**
7. **Seal around pipes and other penetrations with compatible trowel mastic.**
8. **The vapor barrier must be approved prior to concrete placement.**

3.2 JOINTS IN CONCRETE

A. Locate construction and contraction joints as indicated on Drawings and on approved joint location submittal.

1. Do not use contraction joints in framed floors or composite slabs.
2. Locate and install construction joints so they do not impair strength or appearance of the structure, as acceptable to Design Professionals.
3. Coordinate location of construction and contraction joints with locations of joints in finish materials where they exist.

    a) Construction and contraction joints in slabs or slab on grade with terrazzo finish must be reviewed and approved by the Design Professionals.

4. Maximum joint spacing is as indicated on Drawings.

B. Construction Joints:

1. Construction joints shall be located within the central third of the span. Any concrete spilling over or through the bulkhead shall be removed at the completion of the pour. All surfaces of the concrete shall have reinforcing extending through the joint.
2. Horizontal Joints: Horizontal construction joints other than those shown on the Drawings will not be permitted unless approved by the Architect.
3. Joint Preparation: Forms shall be removed in time to permit roughening of construction joints of structural members by chipping and wire brushing to remove all loose and foreign material and roughen to ¼" amplitude. The existing concrete at joints shall either be (a) dampened to the point that the surface is saturated, but all standing water has been removed, promptly followed by placement and vibration of fresh concrete, or (b) not required to be dampened, with one of the specified bonding compounds applied as appropriate for the joint condition, following manufacturer recommendations, with placement and vibration of fresh concrete to follow while the epoxy bonding agent is still tacky. Joints without epoxy bonding agent require fresh concrete with slump 7 inches (180mm) or greater at horizontal joints, and fresh concrete confined to maintain pressure against the joint at vertical joints. Where such conditions are not present, or where applying water to dampen the surface is impractical, use epoxy bonding agent suitable for dry surfaces

C. Isolation Joints:

1. Interrupt structural continuity resulting from bond, reinforcement or keyway at points of contact between slabs-on-grade and vertical surfaces, such as column pedestals, foundation walls and other locations, as indicated.

D. Contraction Joints in Floor Slabs-on-Grade:

1. Maximum slab area controlled by jointing is 400 square feet (35 square meters).
2. Space joints at 36 times slab thickness unless a smaller spacing is indicated on the Drawings, located to conform to bay spacing wherever possible (at column centerlines, half bays, third bays).
3. Contraction joints can be provided by sawcuts, formed joints or appropriately detailed construction joints.
4. Sawcuts shall be made as soon as possible after slab finishing as may be safely done without dislodging aggregate. The Soff-Cut saw shall be used to a depth of ¼ of slab thickness immediately after final finishing. Conventional saw shall be used as soon as possible after final finish without raveling to a depth as indicated on the Drawings.
5. Where contraction joints coincide with construction joints, detail joint as indicated on Drawings.

E. Joint Fillers: Coordinate with Section 032000 Concrete Reinforcement and Embedded Assemblies and Division 7 requirements.

3.3 MIXING

A. Measurement of Materials: Conforming to ASTM C 94

B. Mixing: All concrete shall be ready-mixed conforming to ASTM C 94 except as follows:

1. Provide concrete materials, proportions and properties as herein specified in lieu of ASTM C 94.
2. Water, beyond that required by the mix design, shall not be added at the Project site. Addition of water at the Project site shall be made only in the presence of the Owner's Testing Agency.
3. Furnish delivery ticket with each load of concrete delivered to the site to the Contractor conforming to the requirements of ASTM C 94.

C. High range water reducing agents (superplasticizer), if added at the batch plant, may be added again at the Project site.

1. If superplasticizers are added at the batch plant, the concrete mix design must account for the delivery time, workability, finishability, and setting time required on the jobsite for proper placing and finishing procedures.
2. If the superplasticizer is redosed at the jobsite in air entrained concrete, air content must be checked after mixing.

D. Discharge of the concrete shall be completed within 1-1/2 hours or before the drum has revolved 300 revolutions, whichever comes first, after the introduction

of the mixing water to the cement and aggregates or the introduction of the cement to the aggregates.

3.4 CONCRETE PLACEMENT

A. Prior to Concrete Placement:

1. Mechanical vibrators are required and must be available for placing concrete.
2. Remove debris from space to be occupied with concrete.
3. Notify Design Professionals and Owner’s Testing Agency 48 hours prior to starting concrete placement.
4. Approved mix designs must be maintained on file in Contractor's Field Office.
5. Reinforcement and accessories shall be in proper locations, clean, free of loose scale, dirt or other foreign coatings that may reduce bond to concrete, and in accordance with Section 032000 and Drawings.
6. Fog spray forms, reinforcing steel, and subgrade just before pouring concrete.
7. Do not place concrete having a slump outside of allowable slump range.
8. Place concrete before initial set has occurred, but in no event after it has been discharged from the mixer more than 30 minutes. All concrete shall be placed upon clean, damp surfaces, free from puddled water, or upon properly consolidated fills. Placement upon soft mud or dry earth is not permitted.
9. Unless adequate protection is provided, concrete shall not be placed during rain.
10. Rain water shall not be allowed to increase mixing water or to damage the surface finish.
11. At surfaces left exposed to view, do not use equipment in placing and finishing concrete that contain aluminum in the finishing edges that come in contact with the concrete surface.
12. Keep subgrade moisture uniform without puddles or dry areas.
13. Place vapor retarder directly below slabs on grade as specified in Contract Documents.

B. For Conduits and Pipes Embedded in Concrete:

1. For concrete slab, wall, beam or column, conform to requirements of ACI 318, Chapter 6. For variations from these requirements, submit a written request for Design Professionals' review and response.
2. Conduits and pipes shall not be embedded in concrete slabs on steel deck without approval of Design Professional.
3. Provide sleeves for pipes passing vertically through concrete.
4. Do not embed aluminum materials.
5. Do not cut, bend or displace the reinforcement to facilitate placement of embedded pipes and conduits.

C. Pumping: Pumping shall be done in strict accordance with ACI 304.2R.

D. Placing Concrete in Forms:

1. Clean and prepare forms as specified in Section 031000/Concrete Formwork.
2. Place concrete continuously without interruption between predetermined construction and contraction joints in walls.
3. Deposit concrete in forms in horizontal layers no deeper than 24” (600mm) and in a manner to avoid inclined construction joints.
4. Where placement consists of several layers, place each layer while preceding layer is still plastic to avoid cold joints.
5. Consolidate placed concrete by mechanical vibrating equipment supplemented by hand-spading, rodding or tamping.

    a) Use equipment and procedures for consolidation of concrete in accordance with ACI 309R.

6. Do not use vibrators to move fresh concrete laterally inside forms from discharge point; shift discharge point as needed.
7. Insert and withdraw vibrators vertically at uniformly spaced locations no farther than the visible effectiveness of the machine.
8. Place vibrators to rapidly penetrate placed layer and at least 6" (150mm) into preceding layer.
9. Do not insert vibrators into lower layers of concrete that have begun to set.
10. At each insertion, limit duration of vibration to time necessary to consolidate concrete and complete embedment of reinforcement and other embedded items without causing segregation of mix.
11. Do not vibrate Self-Consolidating Concrete (SCC).

E. Placing Concrete Slabs:

1. Place concrete continuously without interruption between predetermined construction and contraction joints in floors.

    a) Place slabs on grade by the long strip cast method. Refer to ACI 302.1R for recommended methods of placement.

2. Deposit and consolidate concrete slabs in a continuous operation, within limits of construction joints, until completing placement of a panel or section.
3. Consolidate concrete during placing operations so that concrete is thoroughly worked around reinforcement, other embedded items and into corners.
4. Bring slab surfaces to correct level with a straightedge and strike off.

    a) Use highway straight edges, bullfloats or darbies to smooth surface free of humps or hollows.
    b) Do not disturb slab surfaces prior to beginning finishing operations.

5. Maintain reinforcing in proper position on chairs during concrete placement.
6. Do not place materials on slabs or impose loads during period of setting.

F. Placing Concrete on Steel Decks

1. Exercise care during concrete placement on steel decks to prevent concentrated loads or high pile-ups of concrete and to avoid impacts caused by dumping or dropping of concrete on steel decks.
2. Do not use buggies on unprotected areas of deck. If buggies are used to place concrete, furnish and install planked runways to protect deck from damage.

G. Placing Concrete at Construction Joints:

1. To secure full bond at construction joints, surfaces to receive concrete in a subsequent placement shall be left in a roughened state or intentionally roughened by raking while plastic or brushing and chipping immediately after removal.
2. Before new concrete is placed in contact, surfaces of hardened concrete already placed shall be thoroughly cleaned of foreign materials and laitance.
3. At hardened concrete at joints where no bonding agents are used, dampen concrete to achieve a saturated surface dry condition. Leave no standing water. Place and vibrate concrete (slump 7 inches (180mm) or greater) against horizontal joints. Place and vibrate flowing concrete (slump 8 to 10 inches (200 to 250mm)) while maintaining pressure against vertical joints by confinement.
4. At hardened concrete with joints not meeting conditions required for no bonding agents, apply appropriate specified bonding agent for conditions present including age and moisture per manufacturer's specifications. Place new concrete while the bonding agent is still tacky.

H. Floor Topping Slabs:

1. Place concrete topping slab to required lines and levels.
2. Minimum topping slab thickness is 2" (50mm).
3. Place dividers, edge strips and other items to be cast in place.
4. At all topping slabs, remove deleterious material before placing topping slab.
5. At topping slabs placed directly against base slab, remove deleterious material and dampen base slab with water immediately before placing concrete. Leave no standing water.
6. Unless noted as a "bonded" topping slab on the Drawings, topping slabs thinner than 4" (100mm) should be placed directly against dampened base slab with no bonding agent. Topping slabs 4" (100mm) or thicker should be placed on bond breaker consisting of two sheets of plastic film.
7. Where noted on Drawings as a "bonded" topping slab, broom/vacuum clean unsealed surfaces or wire brush sealed or troweled surfaces to expose bare rough surface. Then place approved bonding grout or epoxy adhesive on the base slab per manufacturer's instructions.
8. The topping mix shall have a maximum water/cement ratio of 0.45.
9. The topping mix shall have a maximum shrinkage of 0.04% in 28 days.
10. The topping mix shall contain a minimum of 5 lbs. per cubic yard (2.43 kg/m3) of macro synthetic fibers and achieve an Average Residual

Strength (ARS) of 200 psi (1.4MPa) unless a higher dosage or ARS is noted on the plans.

11. The topping slab shall be moist cured for a minimum of 36 hours after placement.
12. The topping slab shall have contraction joints located to match any joints in the base slab, to eliminate restraint conditions such as re-entrant corners and to isolate the slab from columns, walls, etc. and to limit the maximum distance between joints to 15 feet (4570mm).

I. Cold-Weather Placement:

1. Protect concrete work from physical damage or reduced strength which could be caused by frost, freezing actions, or low temperatures, in compliance with ACI 306R and as specified in this section.
2. When air temperature has fallen to or is expected to fall below 40°F (4°C), uniformly heat water and aggregates before mixing to obtain a concrete mixture temperature of not less than 50°F (10°C), and not more than 80°F (27°C), at point of placement.
3. Do not use frozen materials or materials containing ice or snow.

    a) Do not place concrete on frozen subgrade or on subgrade containing frozen materials.

4. Remove frost, snow and ice from forms, reinforcement and other embedments immediately prior to concrete placement.
5. Use only the specified non-corrosive accelerating admixture previously approved as part of the cold weather mixture. Addition of calcium chloride, salt, thiocyanates or admixtures containing more than 0.05 percent chloride ions is not permitted.

J. Hot-Weather Placement:

1. Hot weather is defined as air temperature which exceeds 90°F (32°C) or any combination of high temperature, low humidity and/or high wind velocity which causes a rate of evaporation in excess of 0.2 pounds per square feet per hour (1.0 kg/m² per hour) as determined by ACI 305R.
2. When hot weather conditions exist that would impair quality and strength of concrete, place concrete in compliance with ACI 305R and as specified in this section.
3. Cool ingredients before mixing to maintain concrete temperature at time of placement below 90°F (32°C).
4. Mixing water may be chilled, or chopped ice may be used to control temperature, provided water equivalent of ice is calculated to total amount of mixing water.
5. Use of liquid nitrogen to cool concrete is Contractor's option.
6. When concrete placement will occur late in the day and reinforcing steel will be heated by the sun, cover reinforcing steel with water-soaked burlap so that steel temperature will not exceed ambient air temperature immediately before embedding in concrete.
7. When concrete operations must be performed in direct sun, wind, high temperatures, low relative humidity, or other adverse placing conditions,

the specified evaporation retarder shall be applied one or more times during the finishing operation to prevent plastic cracking.

3.5

3.6 CONCRETE FINISHES

A. General:

1. Comply with recommendations for concrete finishing established by ACI 302.1R and ACI 304R.
2. Comply with dimensional tolerance limitations given by ACI 117.
3. For shored floor or slab on grade construction: Floor flatness/floor levelness tolerance compliance testing is to be performed prior to the removal of shores and forms but not later than 72 hours of concrete placement by Owner's Testing Agency.
4. See architectural Drawings for locations of the various finishes listed below.
5. Comply with the specified overall SOF_F and SOF_L values listed below:

a) The specified overall area shall be each individual floor.
b) F_F/F_L shall be measured in accordance with ASTM E 1155.
c) The specified minimum local values of MLF_F/MLF_L shall be 3/5 of the SOF_F/SOF_L values listed below.
d) If an individual test section measures less than either of the specified minimum local MLF_F/ MLF_L numbers, that section may be rejected and remedial measures may be required as specified in CONCRETE SURFACE REPAIRS.
e) If the composite value of the test surface measures less than either of the specified overall SOF_F/SOF_L numbers, then the entire slab may be rejected and remedial measures may be required.
f) F_L numbers shall not apply to unshored slabs or shored slabs with camber.

B. Finish for monolithic slab surfaces to receive concrete floor topping or mortar setting beds for tile and other bonded applied cementitious finish flooring material, as indicated on architectural Drawings:

1. Scratch Finish.

a) Finish surface to overall value of SOF_F=20 and SOF_L=15.
b) Slope surfaces uniformly to drains where required.
c) After leveling, roughen surface before final set with stiff brushes, brooms, or rakes.

C. Finish for monolithic slab surfaces to be covered with membrane or elastic waterproofing, membrane or elastic roofing, sand-bed terrazzo as indicated on architectural Drawings:

1. Float Finish.

a) After screeding, consolidating, and leveling concrete slabs, do not work surface until ready for floating.
b) Begin floating, using float blades or float shoes only, when surface water has disappeared, or when concrete has stiffened sufficiently to permit operation of power-driven floats, or both.
c) Consolidate surface with power-driven floats or by hand-floating if area is small or inaccessible to power units.
d) Finish surfaces to overall value of SOF_F=20 and SOF_L=15.
e) Cut down high spots and fill low spots.
f) Uniformly slope surfaces to drains.
g) Immediately after leveling, refloat surface to a uniform, smooth, granular texture.

D. Finishes for Pedestrian Sidewalks and Ramps, Exterior Platforms, Steps, as indicated on architectural Drawings:

1. Sidewalks and Curbs: Light-to-medium broom finish applied with fiber-bristle broom perpendicular to direction of main traffic route immediately after float finishing.
2. Ramps: Scored finish as applied perpendicular to direction of main traffic route immediately after float finishing.
3. Finish surface to overall value of SOF_F=20 and SOF_L=15.
4. Texture shall be approved by the Design Professionals from sample panels.

E. Finish for interior floor slab surfaces exposed to view and slab surfaces to be covered with resilient flooring, carpet, ceramic or quarry tile on thick-set mortar, paint or another thin film-finish coating system, as indicated on architectural Drawings:

1. Trowel Finish.

a) After floating, begin first trowel-finish operation using a power-driven trowel.
b) Begin final troweling when surface produces a ringing sound as trowel is moved over surface.
c) The final hand-troweling operation shall result in a smooth surface, free of trowel marks, uniform in texture and appearance.
d) Grind smooth any surface defects that would telegraph through applied floor covering system.

2. Finish surface to overall value of SOF_F=25 and SOF_L=20.
3. Floor Slopes: Where drains occur, slope floor slabs uniformly to drains, maintaining scheduled slab thickness.
4. Floor Edges at Expansion Joints: Tool edges minimum 3/8" (10mm).
5. Defects: Remove defects of sufficient magnitude to show through floor covering by grinding.
6. Floor Hardener: Use only where scheduled and in accordance with manufacturer's published instructions.
7. Dry Cement: Shall not be used during finishing.

F. Finish for thin set ceramic tile or thin set epoxy terrazzo, as indicated on architectural Drawings:

1. Trowel and Fine Broom Finish:

a) Apply a trowel finish as specified.
b) Immediately follow by slightly scarifying the surface with a fine broom.

2. Finish surface to overall value of SOF_F=35 and SOF_L=25.

G. Finishes for Parking Garage Deck, Ramps, Loading Docks:

1. Highway straight edge immediately after screeding concrete.
2. Finish surface to overall values of SOF_F=20 and SOF_L=15.
3. For Slabs Not Receiving Deck Coating: Medium broom finish with ridges not to exceed 1/8" (3mm) in height. Texture shall be as approved by the Design Professionals from sample panels.
4. For Slabs Scheduled to Receive Deck Coating: Smooth floated finish which must be verified with coating manufacturer before finishing the slab.

a) Coordinate with deck coating specified in Division 7.

5. Auto Ramps: Rough texture applied perpendicular to direction of traffic. Texture shall be as approved by the Design Professionals from sample panels.

H. Tolerances at Slab Discontinuities

1. Within 2 ft (600mm) of slab boundaries, construction joints, isolation joints, block-outs, penetrations or other similar discontinuities, where required for travel paths, installation of finishes and partitions, or any other requirements indicated in the Contract Documents, the following equivalent straightedge tolerances shall apply:

a) Specified local MLF_F = 12, use ¼” (6mm) over 4 ft (1200mm), no offset greater than 1/16” (2mm)
b) Specified local MLF_F = 15, use 1/8” (3mm) over 4 ft (1200mm), no offset greater than 1/32” (0.8mm)

I. Dry Shake Finish:

1. Non-slip aggregate where indicated on Drawings.
2. Non-oxidizing metallic hardener on loading docks at a rate of 1.5 lbs. per sq. ft. (7.3 kg/m²) and in other locations so noted on the Drawings.
3. Mineral aggregate hardener at a rate of 1.2 lbs. per sq. ft. (5.8 kg/m²) where noted on the Drawings.
4. Final finish type, method and tolerance as applicable by location and use.
5. Dry shake finish will be applied only where scheduled and in accordance with the manufacturer's published instructions and the methods and procedures agreed upon at the pre-installation conference.

J. Rough Formed Finish:

1. Acceptable for formed concrete surfaces not exposed-to-view in the finish work or by other construction, unless otherwise indicated.
2. Concrete surface shall have texture imparted by form-facing material used, with tie holes and defective areas repaired and patched, and fins and other projections exceeding 1/4” (6mm) in height rubber down or chipped off.

K. Smooth Formed Finish:

1. Required for formed concrete surfaces exposed to view, or scheduled to be covered with a coating material applied directly to concrete, or a covering material applied directly to concrete, such as waterproofing, dampproofing, veneer plaster, painting, or other similar system, as indicated on architectural Drawings:
2. Surface is an as-cast concrete surface obtained with selected form-facing material, arranged in an orderly and symmetrical manner with a minimum of seams.
3. Repair and patch tie holes and defects. Remove fins and other projections completely.

L. Smooth Rubbed Finish:

1. "Smooth Rubbed" finish shall consist of a finish free of fins, joint marks smoothed off, blemishes removed and surfaces left smooth and unmarred.
2. Provide smooth rubbed finish to scheduled concrete surfaces, as indicated on architectural Drawings, which have received smooth form finish treatment not later than one day after form removal.
3. Moisten concrete surfaces and rub with carborundum brick or other abrasive until a uniform color and texture is produced.

    a) Do not apply cement grout other than that created by the rubbing process.

M. Grout-Cleaned Finish:

1. Provide grout-cleaned finish on scheduled concrete surfaces, as indicated on architectural Drawings, that have received smooth-formed finish treatment.
2. Combine one part Portland Cement to one and one-half parts fine sand by volume, and a 50:50 mixture of acrylic or styrene butadiene-based bonding admixture and water to form the consistency of thick paint.
3. Blend standard Portland Cement and white Portland Cement in amounts determined by trial patches so that final color of dry grout will match adjacent surfaces.
4. Thoroughly wet concrete surfaces, apply grout to coat surfaces, and fill small holes.
5. Remove excess grout by scraping and rubbing with clean burlap.
6. Keep surface damp by fog spray for at least 36 hours after rubbing.

N. Unformed Surfaces:

1. At tops of walls, horizontal offsets, and similar unformed surfaces adjacent to formed surfaces, strike-off smooth and finish with a texture matching adjacent formed surfaces.
2. Continue final surface treatment of formed surfaces uniformly across adjacent unformed surfaces, unless otherwise indicated.

3.7 CURING AND PROTECTION

A. Normal Conditions:

1. Protect concrete from premature drying, excessive hot or cold temperature, and damage.
2. Concrete shall be kept continuously moist and above 50°F (10°C) for seven days (ASTM C 150 Type I cement) or for 10 days (ASTM C 150 Type II cement). High early strength concrete usage shall be maintained over 50o F (10°C) for three days.
3. Concrete and concrete patching materials shall be cured according to manufacturers published recommendations.
4. Begin curing as soon as free water has disappeared from concrete surface and finishing has been completed.
5. Curing Methods: Cure concrete by curing compound, by moist curing, by moisture-retaining cover curing, or by combining these methods, as specified.

a) Apply curing compound on exposed interior slabs and on exterior slabs, walks, and curbs as follows:

i. Apply curing compound to concrete slabs as soon as final finishing operations are complete (within 2 hours and after surface water sheen has disappeared).
ii. Apply uniformly in continuous operation by power spray or roller according to manufacturer's directions.
iii. Recoat areas subjected to heavy rainfall within 3 hours after initial application.
iv. Maintain continuity of coating and repair damage during curing period.
v. Use curing and sealing compounds that will not affect surfaces to be covered with finish materials applied directly to concrete.
vi. Floors to receive covering shall be cleaned thoroughly using a power scrubber and industrial strength detergent.
vii. Hand-brooming and sweeping is not sufficient.
viii. Strippable curing compound may be used in lieu of a moist curing method when approved by the Design Professionals.

b) Provide moist curing by the following methods:

i. Keep concrete surface continuously wet by covering with water.

ii. Use continuous water-fog spray.
iii. Cover concrete surface with specified absorptive cover, thoroughly saturate cover with water, and keep continuously wet. Place absorptive cover to provide coverage of concrete surfaces and edges, with a 4" (100mm) lap over adjacent absorptive covers.

c) Provide moisture-retaining cover curing as follows:

i. Cover concrete surfaces with moisture-retaining cover for curing concrete, placed in widest practicable width with sides and ends lapped at least 3" (75mm) and sealed by waterproof tape or adhesive.

(1) Immediately repair any holes or tears during curing period using cover material and waterproof tape

6. Cure slabs on grade, concrete toppings, concrete pour strips, supported slabs, walls and columns, not subject to conditions of hot or cold weather concreting, in accordance with ACI 308.
7. Cure surfaces exposed to deicing salts, brackish water, etc., such as loading dock slabs, parking garage slabs and ramps in accordance with ACI 308 recommendations for moist curing.
8. Curing Formed Surfaces: Cure formed concrete surfaces, including underside of beams, supported slabs, and other similar surfaces, by leaving forms in place for the full curing period (equivalent to moist curing).

a) If forms are removed prior to completion of full curing period, continue curing by methods specified above for Unformed Surfaces, as applicable.

B. Cold-Weather Protection:

1. When concrete is placed under conditions of cold weather concreting (defined as a period when the mean daily temperature drops below 40°F (4°C) for more than 3 successive days), take additional precautions as specified in ACI 306R when placing, curing, monitoring and protecting the fresh concrete.

C. Hot-Weather Protection:

1. When concrete is placed under conditions of hot weather concreting, provide extra protection of the concrete against excessive placement temperatures and excessive drying throughout the placing and curing operations with an evaporation retarder.

a) Apply according to manufacturer's instructions after screeding and bull floating, but before power floating and troweling.

2. Hot weather curing is required if hot weather conditions occur within a 24-hour period after completion of concrete placement.

D. Floor surfaces, wherever indicated by weather conditions, shall be sprinkled during the interval between finishing operation and the start of curing to positively ensure against the possibility of surface drying.

3.8 CONCRETE REPAIRS

A. Perform patching and repairs in accordance with ACI 301.

B. Contractor shall submit patching and repair methods and materials for review by Design Professionals.

C. When complete, all patches and repairs shall match color and texture of adjoining surfaces.

D. At surfaces that are exposed to view, prepare test areas at inconspicuous locations for review by Design Professionals to verify repair color and texture match before proceeding with repair.

E. Apply all patching and repair materials in accordance with manufacturer's specifications.

F. Repairing Cracks In Formed and Unformed Surfaces:

1. Contractor shall notify Design Professionals of all cracks wider than 0.02" (0.50mm) and all cracks wider than 0.01" (0.25mm) that occur in a group of at least three cracks within twelve inches (300mm), in concrete. If Design Professionals deem repairs necessary, Contractor shall be responsible for repairing all such cracks per Design Professionals recommendation at no expense to the Owner. Repairs will generally require one or more of the following: Epoxy Injection, Semi-Rigid Epoxy, Pressure Injected Foam Resin, Methyl Methacrylate and/or Sealant with joint routed and cleaned. See Concrete Repair Materials section of this Specification for acceptable products

G. Repairing Formed Surfaces

1. Immediately after stripping forms, patch all honeycombing, defective joints, voids, etc. before the concrete is thoroughly dry.
2. Remove all burrs, fins, and ridges before the concrete is thoroughly dry.
3. Remove stains from rust, grease and oils, from release agents, etc.
4. Remove and replace concrete having defective surfaces if defects cannot be repaired to satisfaction of the Design Professionals.

a) Surface defects, include color and texture irregularities, cracks as defined above, spalls, air bubbles, honeycomb, rock pockets, fins and other projections on the surface, and stains and other discolorations that cannot be removed by cleaning.
b) Chip away defective areas, honeycomb, rock pockets, voids over 1/4" (6mm) in any dimension and holes left by tie rods and bolts, down to solid concrete but in no case to a depth less than 1" (25mm) and saw-cut edges to prevent feather edging of fill material.

5. Repair concealed formed surfaces, where possible, containing defects that affect the durability of concrete. If defects cannot be repaired, remove and replace concrete.
6. Clean out form tie holes and fill with dry pack mortar or precast cone plugs secured in place with bonding agent.
7. If honeycombing exposes reinforcement, chip to provide clear space at least 3/4" (20mm) wide all around steel to allow proper bond.

H. Repairing Unformed Surfaces:

1. High and Low areas in concrete surfaces which are in excess of specified tolerances shall be leveled or ground-smooth.

   a) Correct high areas by grinding after concrete has cured at least 14 days.
   b) Correct low areas by applying leveling material. Finish leveling material as specified in this section.

2. Repair surfaces containing defects that affect durability of concrete.

   a) Surface defects include crazing, cracks as defined above, spalling, popouts, honeycombs, rock pockets, and other objectionable conditions.

3. Repair defective areas, except random cracks and single holes not exceeding 1" (25mm) in diameter, by cutting out and replacing with fresh concrete.

   a) Remove defective areas with clean, square cuts and expose reinforcing steel with at least 3/4" (20mm) clearance all around.

I. Filling In: Fill in holes and openings left in concrete for passage of work by other trades, unless otherwise shown or directed, after work of other trades is in place.

3.9 EVALUATION AND ACCEPTANCE OF CONCRETE

A. In accordance with ACI 301, except where otherwise specified.

B. If, at any time during construction, the concrete resulting from the approved mix design deviates from Specification requirements for any reason, such as lack of workability, or insufficient strength, the Contractor shall have his laboratory verify the deficiency and modify the mix design, until the specified concrete is obtained. Modified mix to be submitted for approval per Part 1 - SUBMITTALS.

3.10 CORRECTIVE MEASURES

A. Conflicts: The Contractor shall be solely responsible for errors of detailing, fabrication, and placement of reinforcement steel; placement of inserts and other embedded items; and the structural adequacy of all formwork.

B. Compensation for Additional Services: Should additional work by Design Professionals such as design, drafting, meetings and/or visits be required which are necessitated by failure of the Contractor to perform the work in accordance

with the Contract Documents either developing corrective actions or reviewing corrective actions developed by others, the Contractor is responsible for paying for additional work performed by the Design Professionals at their standard firm-wide billing rates plus out-of-pocket expenses incurred at cost + 10%. Additional costs for testing and inspection by the Owner shall also be compensated by the Contractor.

[Balance of page blank; see form on next page]

CONCRETE MIX DESIGN SUBMITTAL FORM

Project: _____

City: _____

General Contractor: _____

Concrete Contractor: _____

Concrete Strength: _____

Use/Location on Job: _____

Supplier's Mix Designation: _____

Design Mix Information	**(Please check one):**	*Refer to ACI 301 for requirements of data used to substantiate strength calculations.*
Field Experience (Based on Standard Deviation Analysis):		
Trial Mixture Test Data:		

Design Characteristics:

Density: _____ Pcf (kg/m3)

Strength: _____ Psi (MPa) (28 day)

Air: _____ % (specified)

Materials:	**Type/Source**	**Specific Gravity**	**Weight (lb)**	**Absolute Vol. (cu. ft.) (cu. m)**
Cement:				
Fly ash:				
Slag (GGBFS)				
Microsilica:				
Coarse Aggregate:				
Fine Aggregate:				
Water:				
Air:				
Other:				
TOTAL:				27.0 cu. ft. (1.0 m3)
Water/Cementitious Material Ratio (lbs. (kg) water / lbs. (kg) cementitious material) =				%

Admixtures:	Manufacturer	ASTM	Dosage (oz/cwt)
Water Reducer:			
Air Entraining Agent:			
High Range Water Reducer			
Non-corrosive Accelerator:			
Other:			

Slump before HRWR: _____ Inches (mm)

Slump after HRWR: _____ Inches (mm)

Standard Deviation Analysis (from experience records):

No. of Test Cylinders Evaluated: _____

Standard Deviation: _____

Required Average Strength f'cr

Average Strength by Tests

Equation Used (ACI Chapter 5)

(Refer to ACI 318 for increased deviation factor when less than 30 tests are available)

TRIAL MIXTURE TEST DATA

Compressive Strength:	Age (days)	Mix #1	Mix #2	Mix #3
	28 [56] [90]	psi (MPa)	psi (MPa)	psi (MPa)
	28 [56] [90]	psi (MPa)	psi (MPa)	psi (MPa)
	28 [56] [90]	psi (MPa)	psi (MPa)	psi (MPa)
	Average	psi (MPa)	psi (MPa)	psi (MPa)
Required Average Strength f'cr				
Average Strength by Tests				
Equation Used (ACI Chapter 5)				

REQUIRED ATTACHMENTS	***Please check***
Coarse Aggregate Gradation Report	
Fine Aggregate Gradation Report	
Fly Ash (or other Supplementary Cementitious Material) Certification	
Concrete Compressive Strength Data or Trial Mixture Test Data	
Admixture Compatibility certification letters	
Chloride Ion Content Certification	
Alkali Aggregate Reactivity Certification	
Shrinkage Test Reports	

SUBMITTED BY:

Name: _____

Address: _____

_____

Phone no.: _____

Main Plant Location: _____

Miles from Project: _____

Secondary Plant Location: _____

Miles from Project: _____

_____

Date: _____

Certification by Concrete Supplier:
Signature: _____

Print Name: _____

PE License Number and Expiration Date (print or stamp) _____

Structural Substitution Request Form – to be completed by Contractor

Project:		
Date:		Substitution Request #
Requesting Contractor:		Pages Attached (including this form)

1. Description of Requested Substitution:

2. Related Drawings and Specification Sections:

3. Rationale or Benefit Anticipated:

4. Effect on Construction Schedule[1] (check one): ☐ NONE ☐ See Attached

5. Effect on Owner's Cost[2] attach data (check one): ☐ CREDIT TO OWNER ☐ EXTRA

6. Effect on Construction Documents[3] (design work anticipated): ☐ NONE ☐ See Attached

7. Requesting Contractor Agrees to Pay for Design Changes (check): ☐ YES ☐ NO ☐ NOT APPLICABLE

8. Effect on Other Trades[4]:

9. Effect of Substitution on Manufacturer's Warranty (check): ☐ NONE ☐ See Attachment

Signature[5]: Date:

Company:

General Contractor Signature[5]: Date:

Notes:

1. Contractor is responsible for means and methods and any problems that may arise from making the requested substitution.
2. This is NOT A CHANGE ORDER FORM. A separate form is required to adjust costs and/or schedules.
3. Contractor is responsible for any design impacts that may arise from this substitution, including redesign efforts.
4. Contractor is responsible for effects on other trades from this substitution;
   General Contractor must review and agree effects on other trades are fairly represented in items 4-9.
5. Signature by a person having authority to legally bind his/her company to the above terms. Otherwise this request is void
6. All items in form must be completed for substitution request to be considered.

Request Review Responses (completed by Architect and/or Engineer(s)):

ACCEPTED	ACCEPTED AS NOTED	REJECTED	INSUFFICIENT DATA TO SUPPORT REQUEST	ENGINEER / ARCH / MEP SIGNATURE	DATE

Engineer/Architect Comments:

END OF SECTION

SECTION 04 05 11 - MASONRY MORTARING AND GROUTING

PART 1 GENERAL

1.01 SECTION INCLUDES

A. Mortar for masonry.

B. Grout for masonry.

1.02 RELATED REQUIREMENTS

A. Section 04 20 00 - Unit Masonry: Installation of mortar and grout.

B. Section 04 42 00 - Exterior Stone Cladding:: Installation of mortar.

C. Section 08 11 13 - Hollow Metal Doors and Frames: Products and execution for grouting steel door frames installed in masonry.

D. Section 33 05 13 - Manholes and Structures: Installation of mortar and grout.

1.03 REFERENCE STANDARDS

A. ACI 530/530.1/ERTA - Building Code Requirements and Specification for Masonry Structures and Related Commentaries; American Concrete Institute International; 2011.

B. ASTM C91/C91M - Standard Specification for Masonry Cement; 2012.

C. ASTM C94/C94M - Standard Specification for Ready-Mixed Concrete; 2014.

D. ASTM C150/C150M - Standard Specification for Portland Cement; 2012.

E. ASTM C270 - Standard Specification for Mortar for Unit Masonry; 2012.

F. ASTM C387/C387M - Standard Specification for Packaged, Dry, Combined Materials for Concrete and High Strength Mortar; 2011b.

G. ASTM C476 - Standard Specification for Grout for Masonry; 2010.

H. ASTM C780 - Standard Test Method for Preconstruction and Construction Evaluation of Mortars for Plain and Reinforced Unit Masonry; 2012.

I. ASTM C1019 - Standard Test Method for Sampling and Testing Grout; 2013.

J. ASTM C1072 - Standard Test Method for Measurement of Masonry Flexural Bond Strength; 2013.

K. ASTM C1314 - Standard Test Method for Compressive Strength of Masonry Prisms; 2012.

L. ASTM E518/E518M - Standard Test Methods for Flexural Bond Strength of Masonry; 2010.

M. IMIAWC (CW) - Recommended Practices & Guide Specifications for Cold Weather Masonry Construction; International Masonry Industry All-Weather Council; 1993.

N. IMIAWC (HW) - Recommended Practices & Guide Specifications for Hot Weather Masonry Construction; International Masonry Industry All-Weather Council; current edition.

1.04 SUBMITTALS

A. See Section 01 30 00 - Administrative Requirements, for submittal procedures.

B. Product Data: Include design mix and indicate whether the Proportion or Property specification of ASTM C270 is to be used. Also include required environmental conditions and admixture limitations.

C. Samples: Submit two samples of mortar, illustrating mortar color and color range.

D. Reports: Submit reports on mortar indicating conformance of mortar to property requirements of ASTM C270 and test and evaluation reports per ASTM C780.

E. Reports: Submit reports on grout indicating conformance of component grout materials to requirements of ASTM C476 and test and evaluation reports to requirements of ASTM C1019.

F. Manufacturer's Certificate: Certify that products meet or exceed specified requirements.

G. Manufacturer's Installation Instructions: Submit packaged dry mortar manufacturer's installation instructions.

1.05 QUALITY ASSURANCE

A. Comply with provisions of ACI 530/530.1/ERTA, except where exceeded by requirements of the contract documents.
   1. Maintain one copy of each document on project site.

1.06 DELIVERY, STORAGE, AND HANDLING

A. Maintain packaged materials clean, dry, and protected against dampness, freezing, and foreign matter.

1.07 FIELD CONDITIONS

A. Cold and Hot Weather Requirements: Comply with requirements of ACI 530/530.1/ERTA or applicable building code, whichever is more stringent.

PART 2 PRODUCTS

2.01 MORTAR AND GROUT APPLICATIONS

A. At Contractor's option, mortar and grout may be field-mixed from packaged dry materials, made from factory premixed dry materials with addition of water only, or ready-mixed.

B. Mortar Color: Natural gray unless otherwise indicated.

C. Mortar Mix Designs: ASTM C270, Property Specification.
   1. Masonry below grade and in contact with earth: Type S.
   2. Exterior Masonry Veneer: Type N.
   3. Engineered Masonry: Type M.
   4. Exterior, Loadbearing Masonry: Type N.
   5. Exterior, Non-loadbearing Masonry: Type N.

D. Grout Mix Designs:
   1. Bond Beams and Lintels: 3,000 psi strength at 28 days; 8-10 inches slump; provide premixed type in accordance with ASTM C94/C94M.
      a. Fine grout for spaces with smallest horizontal dimension of 2 inches or less.
      b. Coarse grout for spaces with smallest horizontal dimension greater than 2 inches.
   2. Engineered Masonry: 3,000 psi strength at 28 days; 8-10 inches slump; provide premixed type in accordance with ASTM C94/C94M.
      a. Fine grout for spaces with smallest horizontal dimension of 2 inches or less.
      b. Coarse grout for spaces with smallest horizontal dimension greater than 2 inches.

2.02 MATERIALS

A. Packaged Dry Material for Mortar for Unit Masonry: Premixed Portland cement, hydrated lime, and sand; complying with ASTM C387/C387M and capable of producing mortar of the specified strength in accordance with ASTM C270 with the addition of water only.
   1. Type: Types as scheduled in this section.
   2. Products:
      a. Amerimix, an Oldcastle brand; AMX 400: www.amerimix.com.
      b. Substitutions: See Section 01 60 00 - Product Requirements.

B. Packaged Dry Material for Grout for Masonry: Premixed cementitious materials and dried aggregates; capable of producing grout of the specified strength in accordance with ASTM C476 with the addition of water only.
   1. Type: Fine.
   2. Products:
      a. Amerimix, an Oldcastle brand; AMX 600: www.amerimix.com.
      b. Substitutions: See Section 01 60 00 - Product Requirements.

C. Portland Cement: ASTM C150.
   1. Type: Type I - Normal.

2. Color: Standard gray.

D. Water: Clean and potable.

E. Accelerating Admixture: Nonchloride type for use in cold weather.

F. Moisture-Resistant Admixture: Water repellent compound designed to reduce capillarity.

G. Bonding Agent: Latex type.

2.03 MORTAR MIXES

A. Mortar for Unit Masonry: ASTM C270, Property Specification.
1. Engineered masonry: Type M.
2. Masonry below grade and in contact with earth: Type S.
3. Exterior, non-loadbearing masonry: Type N.

B. Stain Resistant Pointing Mortar: One part Portland cement, 1/8 part hydrated lime, and two parts graded (80 mesh) aggregate, proportioned by volume. Add aluminum tristearate, calcium stearate, or ammonium stearate equal to 2 percent of Portland cement by weight.

2.04 MORTAR MIXING

A. Thoroughly mix mortar ingredients using mechanical batch mixer, in accordance with ASTM C270 and in quantities needed for immediate use.

B. Maintain sand uniformly damp immediately before the mixing process.

C. Add admixtures in accordance with manufacturer's instructions; mix uniformly.

D. Do not use anti-freeze compounds to lower the freezing point of mortar.

E. If water is lost by evaporation, re-temper only within two hours of mixing.

2.05 GROUT MIXES

A. Engineered Masonry: 3,000 psi strength at 28 days; 8-10 inches slump; provide premixed type in accordance with ASTM C 94/C 94M.
1. Fine grout for spaces with smallest horizontal dimension of 2 inches or less.
2. Coarse grout for spaces with smallest horizontal dimension greater than 2 inches.

2.06 GROUT MIXING

A. Mix grout in accordance with ASTM C94/C94M.

B. Thoroughly mix grout ingredients in quantities needed for immediate use in accordance with ASTM C476 for fine and coarse grout.

C. Add admixtures in accordance with manufacturer's instructions; mix uniformly.

D. Do not use anti-freeze compounds to lower the freezing point of grout.

2.07 PRECONSTRUCTION TESTING

A. Testing will be conducted by an independent test agency, in accordance with provisions of Section 01 40 00 - Quality Requirements.

B. Mortar Mixes: Test mortars prebatched by weight in accordance with ASTM C780 recommendations for preconstruction testing.
1. Test results will be used to establish optimum mortar proportions and establish quality control values for construction testing.

C. Grout Mixes: Test grout batches in accordance with ASTM C1019 procedures.
1. Test results will be used to establish optimum grout proportions and establish quality control values for construction testing.

PART 3 EXECUTION

3.01 PREPARATION

A. Apply bonding agent to existing CMU surfaces.

B. Plug clean-out holes for grouted masonry with brick masonry units. Brace masonry to resist wet grout pressure.

3.02 INSTALLATION

A. Install mortar and grout to requirements of section(s) in which masonry is specified.

B. Work grout into masonry cores and cavities to eliminate voids.

C. Do not install grout in lifts greater than 16 inches without consolidating grout by rodding.

D. Do not displace reinforcement while placing grout.

E. Remove excess mortar from grout spaces.

3.03 GROUTING

A. Perform all grouting by means of low-lift technique. Do not employ high-lift grouting.

B. Low-Lift Grouting:
   1. Limit height of pours to 16 inches.
   2. Limit height of masonry to 16 inches above each pour.
   3. Pour grout only after vertical reinforcing is in place; place horizontal reinforcing as grout is poured. Prevent displacement of bars as grout is poured.
   4. Place grout for each pour continuously and consolidate immediately; do not interrupt pours for more than 1-1/2 hours.

3.04 FIELD QUALITY CONTROL

A. An independent testing agency will perform field tests, in accordance with provisions of Section 01 40 00 - Quality Requirements.

B. Test and evaluate mortar in accordance with ASTM C780 procedures.
   1. Test with same frequency as specified for masonry units.

C. Test and evaluate grout in accordance with ASTM C1019 procedures.
   1. Test with same frequency as specified for masonry units.

D. Prism Tests: Test masonry and mortar panels for compressive strength in accordance with ASTM C1314, and for flexural bond strength in accordance with ASTM C1072 or ASTM E518/E518M; perform tests and evaluate results as specified in individual masonry sections.

END OF SECTION

SECTION 04 05 11 - MASONRY MORTARING AND GROUTING

PART 1 GENERAL 1.01 SECTION INCLUDES

A. Mortar for masonry.

B. Grout for masonry.

1.02 RELATED REQUIREMENTS

A. Section 04 20 00 - Unit Masonry: Installation of mortar and grout.

B. Section 04 42 00 - Exterior Stone Cladding:: Installation of mortar.

C. Section 08 11 13 - Hollow Metal Doors and Frames: Products and execution for grouting steel door frames installed in masonry.

D. Section 33 05 13 - Manholes and Structures: Installation of mortar and grout.

1.03 REFERENCE STANDARDS

A. ACI 530/530.1/ERTA - Building Code Requirements and Specification for Masonry Structures and Related Commentaries; American Concrete Institute International; 2011. B. ASTM C91/C91M - Standard Specification for Masonry Cement; 2012.

C. ASTM C94/C94M - Standard Specification for Ready-Mixed Concrete; 2014.

D. ASTM C150/C150M - Standard Specification for Portland Cement; 2012.

E. ASTM C270 - Standard Specification for Mortar for Unit Masonry; 2012.

F. ASTM C387/C387M - Standard Specification for Packaged, Dry, Combined Materials for Concrete and High Strength Mortar; 2011b.

G. ASTM C476 - Standard Specification for Grout for Masonry; 2010.

H. ASTM C780 - Standard Test Method for Preconstruction and Construction Evaluation of Mortars for Plain and Reinforced Unit Masonry; 2012.

I. ASTM C1019 - Standard Test Method for Sampling and Testing Grout; 2013.

J. ASTM C1072 - Standard Test Method for Measurement of Masonry Flexural Bond Strength; 2013.

K. ASTM C1314 - Standard Test Method for Compressive Strength of Masonry Prisms; 2012.

L. ASTM E518/E518M - Standard Test Methods for Flexural Bond Strength of Masonry; 2010.

M. IMIAWC (CW) - Recommended Practices & Guide Specifications for Cold Weather Masonry Construction; International Masonry Industry All-Weather Council; 1993.

N. IMIAWC (HW) - Recommended Practices & Guide Specifications for Hot Weather Masonry Construction; International Masonry Industry All-Weather Council; current edition.

1.04 SUBMITTALS

A. See Section 01 30 00 - Administrative Requirements, for submittal procedures.

B. Product Data: Include design mix and indicate whether the Proportion or Property specification of ASTM C270 is to be used. Also include required environmental conditions and admixture limitations.

C. Samples: Submit two samples of mortar, illustrating mortar color and color range.

D. Reports: Submit reports on mortar indicating conformance of mortar to property requirements of ASTM C270 and test and evaluation reports per ASTM C780.

E. Reports: Submit reports on grout indicating conformance of component grout materials to requirements of ASTM C476 and test and evaluation reports to requirements of ASTM C1019.

F. Manufacturer's Certificate: Certify that products meet or exceed specified requirements.

G. Manufacturer's Installation Instructions: Submit packaged dry mortar manufacturer's installation instructions.

1.05 QUALITY ASSURANCE

A. Comply with provisions of ACI 530/530.1/ERTA, except where exceeded by requirements of the contract documents.
   1. Maintain one copy of each document on project site.

1.06 DELIVERY, STORAGE, AND HANDLING

A. Maintain packaged materials clean, dry, and protected against dampness, freezing, and foreign matter.

1.07 FIELD CONDITIONS

A. Cold and Hot Weather Requirements: Comply with requirements of ACI 530/530.1/ERTA or applicable building code, whichever is more stringent.

PART 2 PRODUCTS 2.01 MORTAR AND GROUT APPLICATIONS

A. At Contractor's option, mortar and grout may be field-mixed from packaged dry materials, made from factory premixed dry materials with addition of water only, or ready-mixed. B. Mortar Color: Natural gray unless otherwise indicated.

C. Mortar Mix Designs: ASTM C270, Property Specification.
   1. Masonry below grade and in contact with earth: Type S.
   2. Exterior Masonry Veneer: Type N.
   3. Engineered Masonry: Type M.
   4. Exterior, Loadbearing Masonry: Type N.
   5. Exterior, Non-loadbearing Masonry: Type N. D. Grout Mix Designs:

1. Bond Beams and Lintels: 3,000 psi strength at 28 days; 8-10 inches slump; provide premixed type in accordance with ASTM C94/C94M.
   a. Fine grout for spaces with smallest horizontal dimension of 2 inches or less.
   b. Coarse grout for spaces with smallest horizontal dimension greater than 2 inches.
2. Engineered Masonry: 3,000 psi strength at 28 days; 8-10 inches slump; provide premixed type in accordance with ASTM C94/C94M.
   a. Fine grout for spaces with smallest horizontal dimension of 2 inches or less.
   b. Coarse grout for spaces with smallest horizontal dimension greater than 2 inches.

2.02 MATERIALS

A. Packaged Dry Material for Mortar for Unit Masonry: Premixed Portland cement, hydrated lime, and sand; complying with ASTM C387/C387M and capable of producing mortar of the specified strength in accordance with ASTM C270 with the addition of water only.
   1. Type: Types as scheduled in this section.
   2. Products:
      a. Amerimix, an Oldcastle brand; AMX 400: www.amerimix.com.
      b. Substitutions: See Section 01 60 00 - Product Requirements.

B. Packaged Dry Material for Grout for Masonry: Premixed cementitious materials and dried aggregates; capable of producing grout of the specified strength in accordance with ASTM C476 with the addition of water only.
   1. Type: Fine.
   2. Products:
      a. Amerimix, an Oldcastle brand; AMX 600: www.amerimix.com.
      b. Substitutions: See Section 01 60 00 - Product Requirements. C. Portland Cement: ASTM C150.

1. Type: Type I - Normal.
2. Color:

Standard gray. D. Water:

Clean and potable.

E. Accelerating Admixture: Nonchloride type for use in cold weather.

F. Moisture-Resistant Admixture: Water repellent compound designed to reduce capillarity.

G. Bonding Agent: Latex type.

2.03 MORTAR MIXES

A. Mortar for Unit Masonry: ASTM C270, Property Specification.
   1. Engineered masonry: Type M.
   2. Masonry below grade and in contact with earth: Type S.
   3. Exterior, non-loadbearing masonry: Type N.

B. Stain Resistant Pointing Mortar: One part Portland cement, 1/8 part hydrated lime, and two parts graded (80 mesh) aggregate, proportioned by volume. Add aluminum tristearate, calcium stearate, or ammonium stearate equal to 2 percent of Portland cement by weight.

2.04 MORTAR MIXING

A. Thoroughly mix mortar ingredients using mechanical batch mixer, in accordance with ASTM C270 and in quantities needed for immediate use.

B. Maintain sand uniformly damp immediately before the mixing process.

C. Add admixtures in accordance with manufacturer's instructions; mix uniformly.

D. Do not use anti-freeze compounds to lower the freezing point of mortar.

E. If water is lost by evaporation, re-temper only within two hours of mixing.

2.05 GROUT MIXES

A. Engineered Masonry: 3,000 psi strength at 28 days; 8-10 inches slump; provide premixed type in accordance with ASTM C 94/C 94M.
   1. Fine grout for spaces with smallest horizontal dimension of 2 inches or less.
   2. Coarse grout for spaces with smallest horizontal dimension greater than 2 inches.

2.06 GROUT MIXING

A. Mix grout in accordance with ASTM C94/C94M.

B. Thoroughly mix grout ingredients in quantities needed for immediate use in accordance with ASTM C476 for fine and coarse grout.

C. Add admixtures in accordance with manufacturer's instructions; mix uniformly.

D. Do not use anti-freeze compounds to lower the freezing point of grout.

2.07 PRECONSTRUCTION TESTING

A. Testing will be conducted by an independent test agency, in accordance with provisions of Section 01 40 00 - Quality Requirements.

B. Mortar Mixes: Test mortars prebatched by weight in accordance with ASTM C780 recommendations for preconstruction testing.
   1. Test results will be used to establish optimum mortar proportions and establish quality control values for construction testing.

C. Grout Mixes: Test grout batches in accordance with ASTM C1019 procedures.
   1. Test results will be used to establish optimum grout proportions and establish quality control values for construction testing.

PART 3 EXECUTION 3.01 PREPARATION

A. Apply bonding agent to existing CMU surfaces.

B. Plug clean-out holes for grouted masonry with brick masonry units. Brace masonry to resist wet grout pressure.

3.02 INSTALLATION

A. Install mortar and grout to requirements of section(s) in which masonry is specified.

B. Work grout into masonry cores and cavities to eliminate voids.

C. Do not install grout in lifts greater than 16 inches without consolidating grout by rodding.

D. Do not displace reinforcement while placing grout.

E. Remove excess mortar from grout spaces.

3.03 GROUTING

A. Perform all grouting by means of low-lift technique. Do not employ high-lift grouting. B.

Low-Lift Grouting:

1. Limit height of pours to 16 inches.
2. Limit height of masonry to 16 inches above each pour.
3. Pour grout only after vertical reinforcing is in place; place horizontal reinforcing as grout is poured. Prevent displacement of bars as grout is poured.
4. Place grout for each pour continuously and consolidate immediately; do not interrupt pours for more than 1-1/2 hours.

3.04 FIELD QUALITY CONTROL

A. An independent testing agency will perform field tests, in accordance with provisions of Section 01 40 00 - Quality Requirements.

B. Test and evaluate mortar in accordance with ASTM C780 procedures.
   1. Test with same frequency as specified for masonry units.

C. Test and evaluate grout in accordance with ASTM C1019 procedures.
   1. Test with same frequency as specified for masonry units.

D. Prism Tests: Test masonry and mortar panels for compressive strength in accordance with ASTM C1314, and for flexural bond strength in accordance with ASTM C1072 or ASTM E518/E518M; perform tests and evaluate results as specified in individual masonry sections.

END OF SECTION

SECTION 04 42 00 - EXTERIOR STONE CLADDING

PART 1 GENERAL 1.01 SECTION INCLUDES

A. Cut granite veneer at exterior wall bases and stairs.

B. Remove portion of existing pink granite wall cladding at bottom of new stair opening between new vaults.
   1. Sawcut stone to be removed at new stair opening.
   2. Store removed stone and reuse for patching sides of new stair

opening. C. Metal anchors and supports.

D. Sealing exterior joints.

1.02 RELATED REQUIREMENTS

A. Section 05 50 00 - Metal Fabrications: Shelf angles and supports.

B. Section 07 13 00 - Pre-Applied and Self-Adhering Sheet Membrane Waterproofing: Self-Adhering Sheet Membrane Waterproofing on accessible concrete walls below grade. C.

Section 07 92 00 - Joint Sealants: Sealing perimeter and expansion joints in stone work.

1.03 REFERENCE STANDARDS

A. ASTM A240/A240M - Standard Specification for Chromium and Chromium-Nickel Stainless Steel Plate, Sheet, and Strip for Pressure Vessels and for General Applications; 2015.

B. ASTM A666 - Standard Specification for Annealed or Cold-Worked Austenitic Stainless Steel Sheet, Strip, Plate, and Flat Bar; 2015.

C. ASTM C615/C615M - Standard Specification for Granite Dimension Stone; 2011.

D. ASTM C920 - Standard Specification for Elastomeric Joint Sealants; 2014.

E. ASTM C1248 - Standard Test Method for Staining of Porous Substrate by Joint Sealants; 2008 (Reapproved 2012).

F. ASTM C1330 - Standard Specification for Cylindrical Sealant Backing for Use with Cold Liquid-Applied Sealants; 2002 (Reapproved 2013).

G. NBGQA (SPEC) - Specifications for Architectural Granite; National Building Granite Quarries Association, Inc.; www.nbgqa.com; Version 14-1, 2014.

1.04 ADMINISTRATIVE REQUIREMENTS

A. Preinstallation Meeting: Convene one week before starting work of this section. **1.05**

SUBMITTALS

A. See Section 01 30 00 - Administrative Requirements, for submittal procedures.

B. Product Data: Provide data on stone, mortar products, and sealant products.

C. Shop Drawings: Indicate layout, pertinent dimensions, anchorages, head, jamb, and sill opening details, and jointing methods.

D. Samples: Submit two stone samples 12 x12 inch in size, illustrating color range and texture, markings, surface finish.

E. Samples: Submit mortar color samples.

F. Installation Instructions: Submit stone fabricator's installation instructions and field erection or setting drawings; indicate panel identifying marks and locations on setting drawings.

1.06 QUALITY ASSURANCE

A. Design anchors and supports under direct supervision of a Professional Structural Engineer, registered in New York State.
   1. Design anchors to resist positive and negative wind pressures and other loads as required by applicable code.

2. Design anchor attachment to stone with a factor of safety of 5:1.
3. Design each individual anchor with a factor of safety in the vertical dead-load-bearing direction of 4:1 and in the horizontal lateral-load-bearing direction of 2:1. B. Perform work in accordance with NBGQA (SPEC).

C. Stone Fabricator: Company specializing in fabricating cut stone with minimum ten years of documented experience.

D. Installer Qualifications: Company specializing in performing the work of this section with minimum five years of experience.

1.07 MOCK-UP

A. Construct stone wall mock-up, 3 feet long by 2 feet high, including stone anchor accessories, sill and head flashings, corner condition, typical control joint. B. Locate where directed.

C. Mock-up may remain as part of the Work.

1.08 DELIVERY, STORAGE, AND HANDLING

A. Store stone panels vertically on edge, resting weight on panel edge.

B. Protect stone from discoloration.

1.09 FIELD CONDITIONS

A. During temporary storage on site, at the end of working day, and during rainy weather, cover stone work exposed to weather with non-staining waterproof coverings, securely anchored.

PART 2 PRODUCTS 2.01 STONE

A. Granite: Jet Mist, Quarry, Route 615, 25515 Rapidan Road, Rapidan, VA 22733-0092: granitesofamerica.com.; complying with ASTM C615/C615M.
1. Surface Texture: Thermal.
2. Color: Dark gray.
3. Acceptable Producers:
   a. New England Stone Industries, Inc.; 15 Branch Pike, Smithfield, RI 02917, Tel: 401.232.2040: granitesofamerica.com.: www.newenglandstone.com.
   b. Substitutions: See Section 01 60 00 - Product Requirements.

2.02 MORTAR

A. Mortar: As specified in Section 04 05 11 - Masonry Mortaring and Grouting.

2.03 ANCHORS AND ACCESSORIES

A. Anchors and Other Components in Contact with Stone: Stainless steel, ASTM A666, Type 304.
1. Sizes and configurations: As required for vertical and horizontal support of stone and applicable loads.
2. Wire ties are not permitted.

B. Support Components not in Contact with Stone: Stainless steel, ASTM A240/A240M, Type 304.

C. Setting Buttons and Shims: Lead type.

D. Flashings: Stainless steel; See Section 07 62 00 - Sheet Metal Flashing and Trim.

E. Joint Sealant: ASTM C920 silicone sealant with movement capability of at least plus/minus 25 percent and non-staining to stone when tested in accordance with ASTM C1248.

F. Joint Backer Rod: ASTM C1330 open cell polyurethane of size 40 to 50 percent larger in diameter than joint width.

G. Cleaning Solution: Type that will not harm stone, joint materials, or adjacent surfaces.

2.04 STONE FABRICATION

A. Thickness: 1-1/2 inch; Stair treads: Height of riser.

B. Panel Size: As indicated on drawings.

C. Fabrication Tolerances: In accordance with NBGQA (SPEC).

D. Fabricate units for uniform coloration between adjacent units and over the full area of the installation.

E. Where corner detail is not indicated, form external corners to quirk joint profile.

F. Slope exposed top surfaces of stone and horizontal surfaces for natural wash.

PART 3 EXECUTION 3.01 EXAMINATION

A. Verify that support work and site conditions are ready to receive work of this section.

B. Verify that items built-in under other sections are properly located and sized.

3.02 PREPARATION

A. Clean stone prior to erection. Do not use wire brushes or implements that will mark or damage exposed surfaces.

3.03 INSTALLATION

A. Install flashings of longest practical length and seal watertight to back-up. Lap end joint minimum 6 inches and seal watertight.

B. Set stone with a consistent joint width of 1/2 inch.

C. Install anchors and place setting buttons to support stone and to establish joint dimensions. D. Joints in Exterior Work: Seal joints with joint sealant over backer rod, following sealant manufacturer's instructions; tool sealant surface to concave profile.

3.04 TOLERANCES

A. Positioning of Elements: Maximum 1/8 inch from true position.

B. Maximum Variation from Plane of Wall: 1/4 inch in 10 feet; 1/2 inch in 50 feet.

C. Maximum Variation Between Face Plane of Adjacent Panels: 1/16 inch.

D. Maximum Variation from Level Coursing: 1/8 inch in 3 feet; 1/4 inch in 10 feet; 1/2 inch maximum.

E. Maximum Variation of Joint Thickness: 1/8 inch in 3 feet.

3.05 CUTTING AND FITTING

A. Obtain approval prior to cutting or fitting any item not so indicated on Drawings.

B. Do not impair appearance or strength of stone work by cutting.

3.06 CLEANING

A. Remove excess joint material upon completion of work.

B. Clean soiled surfaces with cleaning solution.

C. Use non-metallic tools in cleaning operations. **END OF SECTION**

SECTION 051200

STRUCTURAL STEEL

PART 1 - GENERAL

1.1 GENERAL

Work of this Section shall conform to requirements of Drawings and general provisions of the Contract, including General and Supplementary Conditions and Division 1 Specification sections.

1.2 SCOPE

The work covered by this Section shall include all labor, material, equipment, permits, engineering and other services necessary for the fabrication and installation of structural steel and related work, complete, in accordance with the Drawings and as specified herein.

1.3 RELATED WORK SPECIFIED IN OTHER SECTIONS

Submittals	Division 1
Quality Control	Division 1
Concrete	Section 033000
Steel Joists	Section 052000
Steel Deck	Section 053000
Miscellaneous Metals	Division 5
Fireproofing	Division 7
Painting	Division 9

1.4 CODES AND STANDARDS

A. Building Code: Structural steel work shall conform to the requirements of the Building Code identified on the Structural General Notes, and OSHA requirements, except where more stringent conditions or criteria occur in the standards referenced below and on the Drawings.

B. Standards:

1. American Institute of Steel Construction (ANSI/AISC 360) "Specification for Structural Steel Buildings" per Structural General Notes.
2. American Institute of Steel Construction (AISC 303), "Code of Standard Practice", shall apply except:

    a) In item 3.1.2 delete all references to item 4.4 and replace with the requirements of the project Specification.
    b) Item 3.6 shall be deleted.
    c) Item 4.4 shall be deleted, and replaced with the requirements of the project Specification.

d) The second paragraph of item 7.10.3 shall be revised from "… owner's designated representatives for design and construction" to "owner's designated representative for construction or as indicated in the Contract Documents"
e) The last sentence of items 8.5.2 and 8.5.4 shall be deleted.
f) Item 8.5.3 shall be deleted. Where a conflict exists between the Code of Standard Practice and the Contract Documents, the Contract Documents shall govern.

3. American Welding Society, AWS D1.1, "Structural Welding Code".
4. **American Welding Society, AWS D1.6, "Structural Welding Code – Stainless Steel"**
5. Research Council on Structural Connections (RCSC) - "Specification for Structural Joints Using ASTM A325 or A490 Bolts".
6. American Society for Testing and Materials "ASTM Standards in Building Codes", various standards as referenced herein.
7. The Society for Protective Coatings (formerly Steel Structures Painting Council, "SSPC") "Steel Structures Painting Manual".

C. Definitions:

1. The term "Contract Documents" in this Specification is defined as the design Drawings and the Specifications.
2. The term "SER" in this Specification is defined as the Structural Engineer of Record for the structure in its final condition.
3. The term "Design Professionals" in this Specification is defined as the Owner's Architect and SER.
4. The term "Contractor" in this Specification is defined to include any of the following: General Contractor and their sub-contractors, Construction Manager, Structural Steel Fabricator or Structural Steel Erector.
5. The term "Heavy Shapes" in this Specification is defined to include hot rolled steel shapes with flanges exceeding 2 inches (50mm) in thickness and built up cross sections with plates exceeding 2 inches (50mm) in total thickness.
6. The term "High Restraint Weld" describes welds in which there is almost no freedom of movement for members joined due to geometry or material thickness.
7. The term "Testing Agency" in this Specification is defined as an independent testing and inspection service engaged by the Owner for quality assurance observation and testing of steel construction in accordance with applicable building code provisions and any additional activities listed in the Contract Documents.
8. The terms "for record" and "submit for record" in this Specification are defined as Contractor submittals that do not require a response from the Design Professionals.
9. Working Days: Monday through Friday, except for federal or state holidays.

1.5 CONTRACTOR QUALIFICATIONS

A. The term Structural Steel Contractor refers to any or all of the following parties, regardless of their contractual relationships: Structural Steel Fabricator, Structural Steel Detailer, Structural Steel Erector and Contractor's Engineer.

B. Qualification Data: Submit qualification data (personnel and firm resumes, and project lists with references) for the Structural Steel Fabricator ("Fabricator"), Structural Steel Detailer ("Detailer"), Contractor's Engineer(s) and Structural Steel Erector ("Erector").

C. The Fabricator shall have 10 years of comparable experience in installations of this type and shall employ labor and supervisory personnel familiar with the type of installation, experienced in fabrication and erection of structural steel for projects of similar size and complexity. At the time of bid the Fabricator shall be AISC certified to the Standard for Steel Building Structures (STD) and must submit proof of these qualifications. The Fabricator's qualifications shall be subject to review by the Design Professionals and Owner.

D. **[The Fabricator shall be AISC certified with the Sophisticated Paint Endorsement, and must submit proof of this endorsement.]**

E. The Detailer shall have 10 years experience preparing detailed steel shop drawings and CNC downloads for structures of this type and complexity. The detailer's qualifications shall be subject to review by the Design Professionals and Owner.

F. The Contractor's Engineer(s) shall be qualified to perform the type of work required by the project. The Engineer(s) shall be a Licensed Professional Engineer(s) in **New York**. The Contractor's Engineer(s) shall have 10 years of experience being in responsible charge of work of this nature. The proposed Engineer(s) shall be subject to approval of Design Professionals and Owner.

G. The Erector shall have 10 years of successful experience erecting structural steel for structures of this type and complexity in the region of the project. At the time of bid the Erector shall be an AISC Certified Steel Erector (CSE) and must submit documentation of this qualification.

H. Welding: Qualify the welding procedures, shop welders, field welders, welding operators and tackers in accordance with AWS D1.1 and for the following periods of effectiveness of certification:

1. Certification and qualification, including period of effectiveness of welding personnel shall be as specified by AWS D1.1. Certification shall remain in effect for duration of work provided welders are continuously engaged in performing the type of welding for which they are certified, unless welders fail to perform acceptable welding, as determined by the Owner's Testing Agency. Certification and re-certification of welding personnel is subject to verification by the Testing Agency. Re-testing for re-certification will be the Contractor's responsibility.

1.6 SUBMITTALS

A. Required Submittals - Where the SUBMITTALS section of this Specification is in conflict with Division 1 Submittals, the more stringent requirements for the Contractor apply. Required submittal items are listed here; see below for detailed requirements. Do not submit items not requested. Reproduction of structural drawings for shop drawings is not permitted. Building Information Models for contractor**'s use may be provided as mutually agreed upon by Design Professionals.**

(1) Submittal Schedule
(2) Calculations, Shop Drawings and Erection Drawings
(3) Submittal Letters
(4) Pre-construction Survey
(5) Quality Control Program
(6) Product Data
(7) Samples
(8) Welding Procedures Specification (WPS)
(9) Welder Certifications
(10) Mill Reports
(11) As-built surveys
(12) LEED Submittals

1. **Submittal Schedule: The contractor shall submit for approval a typical connection design calculation and shop drawing submission schedule at least twenty (20) working days prior to commencing submission of connection design calculations and shop drawings.**

a) This schedule shall include a list, in order of date to be submitted, of all drawings and other required submittal items scheduled to be submitted. The schedule shall list the proposed submittals for each week, including but not limited to the number of calculation sheets, erection drawings, and piece drawings, as well as their formats. Once shop drawing submissions have commenced any modification or addition to this schedule must be submitted for approval at least twenty (20) working days before the modification or addition is proposed to take place.

b) If at any time the total number of connection design calculations, erection drawings and shop drawings received in any one week period exceeds the amount in the approved schedule by more than 10% for that week, the Design Professionals have the right to add two days to the average turnaround time for each 20% increment in excess of the scheduled quantity for that week's submissions. For example if the weekly total exceeds the schedule by 10% to 20%, two days may be added; if it is exceeded by 21% to 40%, four days may be added. The return dates for subsequent submittals may be extended based on the additional review time stated above.

c) For the purposes of developing a schedule, assume the following review rates:

Calculations – 100 – 8 ½' x 11" sheets per week
Shop drawings – 300 pieces per week

2. **Calculations, Shop Drawings and Erection Drawings (including Field Work drawings): Submit** for approval required connection calculations, shop drawings and erection drawings for all structural steel indicated on the Contract Documents.

   a) Material shall not be fabricated or delivered before the shop and erection drawings have been approved or approved as noted by the Design Professionals and returned to the Contractor.
   b) Connection design calculations: Calculations are required for all details that are not indicated on the Drawings as "Completely Designed." Each calculation package shall be signed and sealed by the Contractor's Engineer.
   c) Structural Steel Shop Drawings: Submitted shop drawings shall include layouts and details for each member showing the steel type and grade, size, connections, cuts, copes, holes, bolts, welds, surface treatments (cleaning, shop paint, etc.) and provisions for the connection of other work. Steel type, grade and size for all attached elements shall also be shown.
   d) Shop and erection drawings shall contain complete dimensional and geometric information, based on established dimensions shown on Contract Documents, and shall not be scaled from Contract Documents. The shop drawings shall clearly distinguish between shop and field welds and bolts, identify pretensioned high strength bolts and identify surface preparation requirements at slip critical connections.
   e) Welds: All welds shall be indicated by standard welding symbols in the "Standard Code for Arc and Gas Welding in Building Construction" or as accepted by the SER. Shop and erection drawings shall show the size, length, and type of each weld, including the electrode type to be used.
   f) Bolts: Details for bolt assemblies shall indicate bolt size, length, type and the presence, type and location of washers where required as part of the assembly; distinguish between N and X bolts, distinguish between slip-critical and bearing bolts; specify approved slip critical coatings; and distinguish between shop and field bolts. Also, indicate bolt orientation where required by the Contract Documents.
   g) Erection Drawings: The erection drawings shall include plans showing exact locations of base and bearing plates, and/or anchor rods and other embedded items. All field connections not specifically shown on shop drawings shall be shown on erection drawings, including field bolt size, type, number, location and any special installation requirements, and field weld size, type, length and location.

3. **Submittal Letters: The Contractor shall submit for record let**ters from the Contractor's Engineer supervising the preparation of connection designs on shop and erection drawings.

a) A letter shall be submitted along with the first submission of Connection design calculations. It shall be signed and sealed by the Contractor's Engineer, and shall include the following:

"All Connection design calculations for this project have been developed, and all details and connections for this project will be designed, by me, or by qualified personnel under my direct supervision, to resist the loads and reactions indicated on the Contract Documents, except for those connections which are designated as completely designed on the Contract Drawings."

b) **A second letter shall be submitted upon the satisfactory submission, review and/or approval of all shop and erection drawings. It shall be signed and sealed by the Contractor's Engineer and include the following:**

"All details and connections as shown on the final shop and erection drawings for this project have been designed by me, or by qualified personnel under my direct supervision, to resist the loads and reactions indicated on the Contract Documents, except for those connections which are designated as completely designed on the Contract Drawings."

4. **Preconstruction Survey: Submit for record. Where interface with existing construction occurs, before related shop drawings are prepared survey the existing construction and submit the survey prepared by a professional surveyor employed by the Contractor to the Design Professionals. For all steel construction, before steel erection commences, perform and submit to the Design Professionals a complete survey for position and alignment at all points where construction by other trades will support steel elements, including but not limited to pockets, embedded plates, anchor rods and base plates. Include plan location positions relative to the building gridlines, and elevations of bearing surfaces and tops of bolts relative to building Datum elevation.**
5. **Quality Control Program: Submit for record complete details of the Contractor's quality control program including the names of the personnel responsible for this work.**
6. **Product Data: Submit manufacturers' specifications, test reports and applicable standards for all products listed under Part 2: Products. Standard literature shall be edited to suit job conditions.**
7. **Samples: Submit (2) samples each, (2) of shop painted products and (2) of field touch-up painted products.** Samples shall be steel material.
8. **Welding Procedures: Submit for record written welding procedures for all AWS D1.1 prequalified joints, and qualification procedures for all joints not prequalified by Section 3 of AWS D1.1. For stainless steel welds or bimetallic welds between stainless and carbon steels, submit for review welding procedures and processes per AWS D1.6 requirements.** Submit written welding procedures developed by Contractor’s welding consultant for heavy shapes and High Restraint

Welds described in this Specification. Use the forms in AWS D1.1, Annex E. Submit all welding and qualification procedures to the Owner's Testing Agency for approval before submitting to the Design Professionals.

9. **Welder Certification: Submit for record certification that the welders have passed qualification tests acceptable to the governing authority using AWS procedures.**

   a) A certification shall be submitted in standard AWS format.
   b) Each certification shall state that the welder has been doing satisfactory welding of the required type within the six-month period prior to the subject work.

   For any welder whose period of certification effectiveness has lapsed or whose workmanship is subject to question in the opinion of the Design Professionals or Testing Agency, immediate testing for recertification will be required. Tests, when required, shall be conducted at the sole expense of the Contractor.

10. **Mill Reports: Submit for record certified copies of all mill reports, two (2) to the Design Professionals and one (1) to the Testing Agency, covering the chemical and physical properties of all structural steel and accessories (as defined in this** Specification) for the project.

    a) Such certificates shall be obtained from the mills producing the steel and shall certify in a cover letter submitted with the certificates, that the steel meets the minimum requirements as to physical properties, inspection, marking and tests for structural steel as defined by the current edition of the relevant ASTM Standard Specifications. Any steel that does not meet the ASTM requirements must be clearly identified in a cover letter submitted with the certificates.
    b) Prior to commencing steel erection, the contractor shall deliver certificates to the Owner in number and form as may be required by the local Building Department or other local and State agencies having jurisdiction.

11. **As-Built Surveys: Execute and submit for record a comprehensive survey of steel structure at each level adequate to assess if the structure has been built within the tolerances specified in the Contract Documents. Each certified survey, performed by a professional surveyor employed by the Contractor, shall be submitted to the Contractor's Engineer for their approval before proceeding to the next stage of erection. If deviations from the tolerances are discovered, the Contractor shall present corrective measures to the Design Professionals within 48 hours of completion of that stage of erection. Upon completion of steel erection, submit the complete package of steel surveys for record to the Design Professionals and the Owner.**

    a)

B. Submittal Process

1. Submittal of shop and erection drawings and other submittals by the Contractor shall constitute Contractor's representation that the Contractor has verified all quantities, dimensions, specified performance criteria, installation requirements, materials, catalog numbers and similar data with respect thereto and reviewed or coordinated each drawing with other Drawings and other trades. The Contractor shall place their shop drawing stamp on all submittals confirming the above.
2. Connection design calculations: Calculations are required for all details that are not indicated on the Drawings as “Completely Designed.” The Contractor shall submit connection design calculations and receive an action of approval prior to submitting shop drawings related to those calculations. The shop drawings shall incorporate all comments provided on the calculations.
3. Shop and erection drawings: Submit in complete packages so that individual parts and the assembled unit may be reviewed together. This Specification Section and the applicable drawings used in the development of the shop and erection drawings shall be referenced on each shop and erection drawing to facilitate checking. Unless the piece marks are self-indexing, furnish index sheets with the shop drawings, relating piece marks for all beam, girder and column details to the sheet numbers on which they are located.
4. The Contractor shall submit to the Design Professionals two (2) black line prints and one (1) electronic copy for shop drawing review. If the Contractor and Design Team agree to process shop drawings electronically, Contractor shall submit one electronic copy to the SER. The naming convention of each drawing must follow the submittal numbering system and include the submittal #, specification #, revision # and drawing # in the prefix of the drawing name.
5. The Contractor shall allow at least ten (10) working days between receipt and release by the SER for the review of shop and erection drawings and submittals other than connection design calculations. The Contractor shall allow at least fifteen (15) working days between receipt and release by the SER for the review of connection design calculations.
6. All modifications or revisions to submittals, shop drawings, connection design calculations and erection drawings must be clouded, with an appropriate revision number clearly indicated. The following shall automatically be considered cause for rejection of the modification or revision whether or not the drawing has been approved by the Design Professionals:

    a) Failure to specifically cloud modifications
    b) Failure to submit calculations for the modifications
    c) Unapproved revisions to previous submittals
    d) Unapproved departure from Contract Documents

7. The Contractor shall deliver to the Design Professionals at the completion of the job two (2) electronic versions of the final as-built shop drawings on a CD-ROM or other media acceptable to the Design Professionals.
8. Resubmittals: Completely address previous comments prior to resubmitting a drawing. Resubmit only those drawings that require resubmittal.

9. Resubmittals Compensation: The Contractor shall compensate the Design Professionals for submittals that must be reviewed more than twice due to contractors' errors. The Contractor shall compensate the Design Professionals at the standard billing rates plus out-of-pocket expenses incurred at cost + 10%.

C. SER Submittal Review

1. The review of connection design and the review and approval of shop and erection drawings and other submittals by the Design Professionals shall be for general conformance with the design intent of the work and with the information given in the Contract Documents only and will not in any way relieve the Contractor or the Contractor's Engineer from:

   a) Responsibility for the adequacy of the design of the connections designed by the Contractor's Engineer.
   b) Responsibility for all required detailing.
   c) Responsibility for the proper fitting of construction work in strict conformance with the contract requirements.
   d) The necessity of furnishing material and workmanship required by contract Drawings and Specifications which may not be indicated on the shop and erection drawings.
   e) Conforming to the Contract Documents.
   f) Coordination with other trades.
   g) Control or charge of construction means, methods, techniques, sequences or procedures, for safety precautions and programs in connection with the work.

2. TYPE 1 Stamp - For shop drawings for building elements designed by the SER, the responses on the shop drawing review stamp used by the SER require the following actions:

   a) APPROVED indicates that the SER has found that the information presented on the shop or erection drawing appears to conform to the requirements of the Contract Documents. Fabrication, manufacture or construction of the elements of work shown in the shop drawing may proceed, provided that work is in compliance with the Contract Documents.
   b) APPROVED AS NOTED indicates that the SER requires the shop or erection drawing to be corrected to reflect the notes and comments shown. Fabrication, manufacture or construction of the elements of work shown in the shop drawing may proceed, provided that work is in compliance with the notations shown on the shop drawings and the Contract Documents. Promptly resubmit the corrected shop or erection drawing for record.
   c) REVISE and RESUBMIT indicates that the SER requires resubmission of the shop or erection drawing after correction per notes and comments. None of the elements of work shown on the shop drawing shall be fabricated, manufactured or constructed until the Contractor has received a returned shop drawing marked Approved or Approved as Noted.

d) NOT APPROVED indicates that the shop or erection drawing does not conform to the Contract Documents and must be extensively revised before re-submittal. None of the elements of work shown on the shop drawing shall be fabricated, manufactured or constructed until the Contractor has received a returned shop drawing marked Approved or Approved as Noted.

3. TYPE 2 Stamp - For submittals for building elements which are not designed by the SER but are performance specified, for items that do not form part of the completed structural system but impose loads on the structure, and for construction items or activities which have an effect on the final structure, a second stamp will be used. The responses on the stamp used by the SER require the following actions:

a) NO EXCEPTIONS indicates that the SER has found that the information presented on the submittal appears to conform to the requirements of the Contract Documents. Fabrication, manufacture or construction of the elements of work shown in the shop drawing may proceed, provided that work is in compliance with the Contract Documents.
b) EXCEPTIONS NOTED indicates that the SER requires the submittal be corrected to reflect the notes and comments shown. Fabrication, manufacture or construction of the elements of work shown in the shop drawing may proceed, provided that work is in compliance with the notations shown on the shop drawings and the Contract Documents. Promptly resubmit the corrected document for record.
c) REJECTED indicates that the SER requires resubmission of the submittal after correction per notes and comments. None of the elements of work shown on the shop drawing shall be fabricated, manufactured or constructed. Contractor to revise and resubmit until SER response of No Exceptions or Exceptions Noted is received.

D. Substitution Request

1. Requests for any departure from Contract Documents must be submitted in writing by the Contractor and accepted in writing by the Design Professionals, prior to receipt of submittals.
2. All substitutions must be requested using the structural substitution request form included at the end of this section. Acceptance using the structural substitution request form indicates acceptability of the structural concept only. Contractor must submit shop drawings reflecting accepted substitutions for review in accordance with this Specification. The structural substitution request form, even if accepted, does not constitute a change order.
3. Such substitutions or modifications, if acceptable to the Design Professionals shall be coordinated and incorporated in the work at the sole expense of the Contractor.
4. The acceptance by the Design Professionals of a specific and isolated request by the contractor to deviate from these requirements does not

constitute a waiving of that requirement for other elements of, or locations in the project, unless specifically addressed as such and permitted by the Design Professionals in writing.

5. Compensation for Additional Services: Should additional work by Design Professionals such as design, drafting, meetings and/or visits be required which are necessitated for the review and/or incorporation of the Contractor-requested substitution, including indirect effects on other portions of the work, the Contractor is responsible for paying for additional work performed by the Design Professionals at the standard billing rates plus out-of-pocket expenses incurred at cost + 10%. Additional costs for testing and inspection by the Owner shall also be compensated by the Contractor.
6. Contractor is responsible for means and methods and any impacts on other portions of the work that may arise from this substitution.

E. Request for Information (RFI)

1. RFI shall originate with the Contractor. RFI submitted by entities other than that Contractor will be returned with no response.
2. Limit RFI to one subject.
3. Submit RFI immediately upon discovery of the need for interpretation or clarification of the Contract Documents. Submit RFI within timeframe so as not to delay the Construction Schedule while allowing the full response time described below.
4. The response time for answering an RFI depends on the category in which it is assigned.

a) Upon receipt by the SER, each RFI will be assigned to one of the following categories:

i. No cost clarification
ii. Shown in Contract Documents
iii. Change to be issued in future bulletin
iv. Previously answered
v. Information needs to be provided by others.
vi. Request for corrective field work
vii. Request for substitution

b) RFIs in categories 1, 2, 3, 4 and 5 will be turned around by the SER on average of five (5) working days.
c) RFIs in categories 6 and 7 will be rejected and must be submitted as submittals or requests for substitution.

1.7 TEMPORARY SUPPORT OF STRUCTURAL STEEL FRAME

The structure as shown on the Contract Documents is designed to withstand the design loads only when all structural elements are installed and fully connected. The contractor shall be responsible for the analysis of all components and assemblies for stresses and displacements that may be imposed by fabrication, shipping, handling, erection, temporary conditions, construction loads, etc. The analysis of such shall be performed by the Contractor's Engineer.

1.8 DELIVERY, STORAGE, AND HANDLING

A. Delivery: Unload all structural steel promptly upon arrival and store in an area designated and approved by the Owner at the site of the work. The Contractor shall be responsible for any charges from failure to unload material promptly.

B. Storage: Store structural steel to drain properly. Provide weep holes and clean out as required to keep steel free from water. Provide adequate protection and shoring to prevent distortion and other damage. Store structural steel on timber; do not lay on mud, directly on ground or cinders, or otherwise handle in a manner that damages finishes. Stored sections shall be readily accessible for inspection.

C. Store fasteners in a protected place.

D. Welding materials to be in moisture resistant, undamaged package. Maintain packages effectively sealed until electrode is required for use. Storage and handling shall be per AWS D1.1.

1.9 CONNECTION DESIGN AND DETAILING CONFERENCE

A. At least 20 working days prior to starting connection design and detailing, the Fabricator shall hold a meeting to verify all connection design assumptions and procedures and shop drawing preparation and submittal procedures.

B. The Contractor shall prepare an agenda and require responsible representatives of every party who is concerned with the connection design and detailing to attend this meeting, including but not limited to:

1. General Contractor
2. Fabricator
3. Detailer
4. Connection Engineer
5. Design Professionals
6. Erector

C. The Fabricator shall prepare an agenda prior to the meeting, and shall distribute meeting minutes to all parties within 5 working days of the meeting.

1.10 DESIGN OF CONNECTIONS

A. The contractor is responsible to design all connections not completely designed on the Contract Documents. A Completely Designed connection is only one that is specifically designated as such by the statement “COMPLETELY DESIGNED” on the Contract Documents. All connections not indicated as “COMPLETELY DESIGNED” shall be designed for the forces and/or connection design criteria called for in the Contract Documents.

B. Connection concepts shown on the Drawings that are not “COMPLETELY DESIGNED” show only the minimum requirements to convey design intent.

C. All connections and details shown on shop and erection drawings shall be prepared under the supervision of the Contractor's Engineer, in accordance with

AISC "Load and Resistance Factor Design Specification for Structural Steel Buildings."

D. The contractor shall design and provide any stiffener plates, doubler plates, reinforcing plates, etc. and their connections that may be required to develop and/or transfer the forces and/or connection design criteria called for in the Contract Documents.

E. Design connections to withstand the combined effects of shears, axial forces, moments and torques and as required by applicable code(s) and the Contract Documents.

F. All forces shown on the Drawings are to be assumed reversible unless noted otherwise and must be checked for both directions. If no transfer/pass-through forces are shown on the Contract Documents, the most critical combinations of member forces and directions shall be assumed for the connection design.

G. Use types of shop and field connections shown on Contract Documents or, in absence of such indication, propose appropriate type for Design Professionals review.

H. Welding of High Restraint Welds: Use double bevels in lieu of single bevels where practical. Detail joints to allow for weld shrinkage. In cases of plates in more than one plane, show welding operation sequence on the drawings. In general, start welding at the most restrained part of the weldment and proceed to the least restrained.

I. All welded connection must utilize pre-qualified joints or joints that have been qualified by AWS D1.1, section 2.

J. Comply with all connection notes on Drawings in conjunction with these Specifications.

K. The connection design calculation submittals shall meet the following criteria:

a) Number each calculation in a logical and orderly system. Once submitted for review, calculations shall not be renumbered. Resubmitted calculations shall be indicated by using the same number with an “R” suffix. All changes must be clouded.
b) Provide sketches for results of each calculation, with all pertinent dimensions relating to the calculations (including pitch, gage, edge distance, unbraced lengths, Whitmore lengths, etc.) clearly shown. Geometry must be shown accurately and to scale. Provide enough sketches to clearly document the full range of geometric conditions applicable to each connection design calculation proposed.
c) For repetitive connections provide a spreadsheet or computer program summary table for each specific location, and a standard calculation which shows how the spreadsheet or program calculation applies.
d) Provide drawings showing the overall locations of the connections that are keyed/referenced to each connection calculation.

e) Calculations shall be typed, or performed by spreadsheet, or by computer program, or by other method approved by the SER. All spreadsheet calculations shall show the input and results for every calculation step and include appropriate text and sketches explaining all calculation assumptions.

f) Provide calculation checks for all forces shown on the Drawings. All AISC code requirements apply. Provide calculations for each check. “OK by inspection” is not permitted.

1.11 STRUCTURAL STEEL PRE-ERECTION CONFERENCE:

A. At least twenty (20) working days prior to the commencing of steel erection the Contractor shall hold a meeting to review the detailed requirements of the steel erection.

B. The Contractor shall prepare an agenda and require responsible representatives of every party who is concerned with the steel erection to attend the conference, including but not limited to the following:

1. General Contractor/Construction Manager
2. Steel Erector / Steel Fabricator
3. Erector’s Surveyor
4. Roof Deck Contractor
5. All Testing and Inspection Agencies
6. Design Professionals
7. Owner
8. Precast or Cladding Contractor as appropriate.

C. Minutes of the meeting shall be recorded, typed and distributed by the Contractor to all parties listed above within 5 working days of the meeting.

D. The minutes shall include a detailed outline of the erection procedure including a schedule of milestone dates for surveys and sign-offs on erection stages which represents an agreement reached by all parties involved. It shall also include the surveying program and submission schedule for approval.

E. Notwithstanding any provision of the Specification, the SER shall not be responsible for and not have charge over any safety programs or precautions at the site of the Project.

1.12 QUALITY ASSURANCE BY OWNER’S TESTING AGENCY

A. Quality assurance is testing and inspection to assist the Owner in evaluating the Contractor's performance in the fabrication shop and field. It is not a substitute for the testing and inspection which is required as part of the Contractor's quality control program (see the following section on quality control).

B. Cost: Except as specifically noted otherwise, the testing agencies for quality assurance shall be engaged and paid by the Owner.

C. The Owner has negotiated inspection services based upon the assumption that all fabrication work shall be performed at one single fabrication shop. Costs

associated with work being performed in additional shops will require reimbursement to the Owner.

D. Coordination with Owner's Testing Agency: The Contractor shall have sole responsibility for coordinating their work with the testing agency to assure that all test and inspection procedures required by the Contract Documents and Public Agencies are provided. The Contractor shall cooperate fully with the Owners testing agencies in the performance of their work and shall provide the following:

1. Information as to time and place of starting shop fabrication and a field construction and erection schedule, one week prior to the beginning of the work.
2. Site File: At least one copy of each approved shop drawing shall be kept available in the contractor's field office and the drawings not bearing evidence of approval and release for construction by the Design Professionals shall not be kept on the job. Provide drawings for the work to be performed in the shop or field one week prior to the start of work.
3. Representative sample pieces requested by the inspection agency for testing, if necessary.
4. Full and ample means of assistance for testing and inspection of material.
5. Proper facilities, including scaffolding, temporary work platforms, safety equipment etc., for inspection of the work in shop and field.

E. Duties of the Owner's Testing Agencies:

1. Reports: The Testing Agency shall prepare daily reports of the structural steel work including progress and description/area of work, tests made and results. Reports of inspection of welding shall include deficiencies noted and corrections made, and other items pertinent to acceptance or rejection of the work. The reports shall state whether specimens comply with or deviate from contract requirements. The daily reports shall be collected and delivered to the Design Professionals and Owner weekly.
2. Rejection: The Owner's Testing Agency has the right to reject any material, at any time, when it is determined that the material or workmanship does not conform to the Contract Documents. The Testing Agency shall report deficiencies to Owner, Design Professionals, and Contractor immediately.
3. Structural steel work and general testing requirements: The Testing Agency shall perform the following shop and field inspections in addition to any other inspections enumerated above or specified on the Contract Documents:

    a) Shop inspection of steel shall include alignment and straightness of members, camber, preparation for connections, dimensional checks, testing of shop bolts, witnessing of welding procedures, testing of cuts, weld access holes and copes of heavy shapes as defined in this Specification, examination and testing of completed welds, headed studs and deformed bar anchors, cutting of heavy shapes, finishing of column ends, cleaning, painting and storage of material. All shop fabrication shall be inspected in the shop. Camber shall be verified in a minimum of 10% of all members

requiring camber. If, in the opinion of the SER and Testing Agency this testing discloses a large ratio (10% or more) of unacceptable cambers, the required percentage of tested cambers may be increased by the SER to 100% at no expense to the Owner.

b) Field inspection of steel shall include connections, proper tensioning of bolts, levelness, plumbness and alignment of the frame, conformance to AWS welding methods, examination of surface before welding, examination and testing of completed welds, headed studs and deformed bar anchors and field painting, including touch-up.

c) Check qualifications of the following:

i. Shop welding procedures and personnel
ii. Shop stud welding setup and operators
iii. Shop bolting procedure and crew

d) Where testing is required for less than 100% of locations, select test locations at random and throughout the project.

e) Review mill certifications for compliance with the Contract Documents.

4. High Strength Bolting: The Testing Agency inspector shall inspect high strength bolted construction in accordance with RCSC "Specification for Structural Joints using ASTM A 325 or A 490 Bolts," including but not limited to:

a) Surface preparation and bolt type conforms to plans and Specifications prior to start of bolting operations.

b) Proper bolt storage and handling procedures per codes and standards referenced by this Specification are being followed.

c) Visually inspect all bolted connections.

d) For all bolted connections that are indicated as snug tight, connections are properly compacted and brought to the snug tight condition progressing outward from the most rigid part.

e) For all bolted connections that are indicated as pretensioned or slip critical, pre-installation verification testing is performed by the inspector in cooperation with the contractor in accordance with RCSC section 9.2 and section 7.

f) For all bolted connections that are indicated as pretensioned or slip critical, through routine observation, as defined in RCSC 9.2.1, 9.2.3 or 9.2.4, that the pretensioning methods of RCSC 8.2.1, 8.2.3, or 8.2.4, as appropriate, are performed.

i. "Routine observation" is defined as observation of 10 bolts for every 100 bolts with a minimum of 2 bolts per connection.

g) Retest bolted connections that fail initial inspection after correction by the Fabricator or Erector.

5. Welding:

a) Review of submittals: Welding procedures including prequalification, qualifications test and, for heavy shapes and high restraint welds, the welding procedure prepared by the Contractor's Engineer or Welding Consultant.

b) Full penetration welds: Test all full penetration welds for soundness by means of either radiographic or ultrasonic testing in accordance with AWS D1.1 and ASTM E164 procedures. All flaws in plate or flange material revealed during such tests shall be repaired by the Contractor at the Contractor's expense.

c) Partial penetration welds: Test all partial penetration welds for soundness by means of visual and magnetic particle inspection, unless other methods are specified in the Contract Documents. All flaws in plate or flange material revealed during such tests shall be repaired by the Contractor at the Contractor's expense.

d) Testing of welds at heavy shapes and high restraint welds shall be performed not less than 48 hours after the weld has been completed.

e) Fillet welds: Visually inspect all fillet welds. In addition test ten percent (10%) of all fillet welds using a non-destructive method, such as dye penetrant or magnetic particle. Select test locations randomly throughout the structure, but test at least one weld in each location with 6 or more welds per connection. If, in the opinion of the SER and Testing Agency this testing discloses a large ratio (10% or more) of unacceptable welds, the required percentage of tested welds may be increased by the SER to 100%, all at the Contractor's expense.

f) Inspection and Testing by the Testing Agency of high restraint welds and where Heavy Shapes are to be joined by partial or full penetration welds in tension:

   i. Joint Preparation: Monitor fit up and joint preparation (bevel angle, etc.) for conformance to the submitted welding procedures including preheat and interpass temperature. Monitor base metal temperature during welding operations.

   ii. Test Full Penetration Welds in accordance to the requirements of this Specification section, ultrasonically in accordance with AWS D1.1 procedures. On T or corner joints, pay careful attention to the heat affected zone and base metal where the weld shrinkage stresses are in the through thickness direction.

   iii. Test Partial Penetration Butt Joints in accordance with this Specification section by the magnetic particle method. At T or corner joints, in addition to the magnetic particle testing, ultrasonically scan the heat affected zone and adjacent base metal from face "C" per AWS D1.1 Table 6.7 and Annex K-7 to detect lamellar tears and shall be done with a compression wave. The Testing Agency shall submit a testing procedure that includes evaluation (acceptance criterion) procedures to the Design Professionals for review.

g) At heavy shapes and high restraint welds: provide pre-production sample testing of heat treatment, observe fabrication, welding and heat treatment of the samples for conformance with submitted welding procedures. Establish locations of testing coupons following AWS procedures. Test coupons following AWS procedures to verify satisfactory results using the welding procedure and heat treatment.

6. Headed Studs and Deformed Bar Anchors: Visually inspect all headed studs and deformed bar anchors for complete fusion and full 360-degree weld flash (or fillet).

   a) Check all studs with incomplete fusion, and at random five studs at each of six beams per floor, by bending to an angle of 15 degrees from its original axis (away from any missing flash). If more than twenty percent of studs fail on one member, check all studs on member. In addition for each member with any defective studs, test an additional member.
   b) Contractor to replace any studs that crack or break. Contractor to only straighten studs that would foul other work or have less than 1 inch (25mm) cover in bent position.

7. Cleaning & Painting:

   a) Prior to shop painting, examine all fabricated pieces to verify proper cleaning in accordance with this Specification.
   b) Examine all shop painting to verify conformance with this Specification.
   c) Examine loading and unloading of steel to visually observe that damage does not occur during shipping and handling.

8. Remedial Work: The Testing Agency shall indicate to the Contractor where remedial work must be performed and will maintain a current list of work not in compliance with the Contract Documents. This list shall be submitted to the Design Professionals and Owner on a weekly basis.
9. Certification: When all work has been approved by the Testing Agency, the Testing Agency shall certify in a letter to the Design Professionals and Owner that the installation is in accordance with the design and Specification requirements (including applicable codes).

1.13 QUALITY CONTROL BY CONTRACTOR

A. The Contractor shall provide a program of quality control to ensure that the minimum standards specified herein are attained.

B. The Owner's general review during construction and activities of the Owner’s Testing Agency are undertaken to inform the Owner of performance by the Contractor but shall in no way replace or augment the Contractor's quality control program or relieve the Contractor of total responsibility for quality control.

C. The Contractor shall immediately report to the Design Professionals any deficiencies in the work which are departures from the Contract Documents

which may occur during construction. The Contractor shall propose corrective actions and their recommendations in writing and submit them for review by the Design Professionals. After proposed corrective action is accepted by the Design Professionals and Owner, the Contractor shall correct the deficiency at no cost to the Owner. Where the Contractor requests that the Design Professionals develop the corrective actions or review corrective actions developed by others, the Design Professional shall be compensated as outlined in the OBSERVATIONS AND CORRECTIONS BY DESIGN PROFESSIONALS section of this Specification.

1.14 OBSERVATIONS AND CORRECTIONS BY DESIGN PROFESSIONALS

A. Observations: The Design Professionals will observe the construction for general compliance with the provisions of the Contract Documents during various phases of construction.

B. Corrections by Design Professionals: See Part 3 - CORRECTIVE MEASURES section of this specification.

1.15 PERMITS AND WARRANTY

A. Permits: The Contractor shall apply for, procure, renew, maintain, and pay for all permits required by City, State, or other governing authorities, necessary to execute work under this Contract. Contractor shall furnish copies of all permits to the Owner and Design Professionals.

B. Warranty: Upon completion of all work to be performed under this Contract, the Contractor shall execute and deliver in a satisfactory form a warranty that all workmanship and materials used in the performance of this Contract shall remain free from defects for a period of one (1) year from the date of execution of the Warranty.

PART 2 - PRODUCTS

2.1 STRUCTURAL STEEL

A. Structural steel shall conform to the requirements listed on the Structural General Notes.

2.2 SHOP COATINGS

A. Standard Primer: Rust inhibitive, universal phenolic alkyd metal primer 2-4mls. Color to be determined by Architect. Primer shall be compatible with, and from the same manufacturer as, top coats specified in Division 9 specification.

B. Zinc Rich Primer: SSPC-Paint 20, Type I or Type II, Zinc rich primer utilizing either an organic or inorganic binder with a minimum zinc content of 80 percent by weight in the dry film. The primer shall provide a surface meeting AISC Slip Critical Class B (slip coefficient =0.50 min) requirements. Color to be determined by Architect. Primer shall be compatible with, and from the same manufacturer as, top coats specified in Division 9 specification.

C. Hot Dip Galvanizing: ASTM A123, weight of coating shall average not less than 2.3 oz per square foot (0.70 kg/ m²), with no individual thickness less than 2.0 oz per square foot (0.61 kg/m²).

D. Galvanizing Repair Paint: ZRC Cold Galvanizing Compound, or other coating complying with SSPC-Paint 20.

2.3 ACCESSORIES

A. High Strength Bolts: Conform to the provisions of the Research Council on Structural Connections (RCSC) "Specifications for Structural Joints using ASTM A325 or A490 Bolts" except that nuts shall be ASTM A563 Grades DH or DH3 (hardened) for both A325 and A490 bolts. Twist off type bolts (Tension Control bolts) shall additionally conform to ASTM F1852 or ASTM F2280.

B. All bolts shall be new, and not re-used.

C. Where A325 galvanized bolts nuts and washers are required, they shall be in accordance with ASTM F2329 and ASTM A153, Class C. Where A588 steel is used, bolts, nuts and washers shall be Type 3.

D. Direct Tension Indicators: Meet requirements of ASTM F959.

E. Anchor Rods: Per structural General Notes.

F. Washers:

1. Round washers shall conform to American Standard B 27.2 type b
2. Washers in contact with high-strength bolt heads and nuts shall be hardened in accordance with ASTM Standard F436.
3. Beveled washers shall be square, smooth and sloped so that contact surfaces of the bolt head and nut are parallel.
4. The diameter of the hole of square beveled washers shall be 1/16 inch (1.5mm) greater than the bolt size for bolts smaller than one inch (25mm), and shall be 1/8 inch (3.0mm) greater than the bolt size for bolts larger than one inch (25mm).
5. Comply with requirements of RCSC for all washers including thickness, size and hardness, depending on connection details.

G. Welding Electrodes: Electrodes shall be low hydrogen and shall be selected from Table 3.1 of AWS D1.1.

1. Shielded Metal-Arc Welding: Welding electrodes for manual shielded metal-arc welding shall conform to the specification for Mild Steel Covered Arc-Welding Electrodes, AWS A5.1 E70 or 80, or the specification for Low-Alloy Steel Covered Arc-Welding Electrode, AWS A5.5.
2. Submerged-Arc Welding: Bare electrodes and granular flux used in submerged-arc welding shall conform to F70 or F80 AWS flux classifications of the specification for Gare Mild Steel Electrodes and Fluxes for submerged-arc Welding, AWS A5.17.

H. Headed Studs (shear connectors) shall be per Structural General Notes.

I. Deformed Bar Anchors shall be as specified in Structural General Notes.

J. Steel Castings shall conform to ASTM A27, Grade 65-35, medium strength carbon steel.

K. Grout: Refer to General Notes.

L. Post-installed Anchors shall be per Structural General Notes.

M.

PART 3 - EXECUTION

3.1 PREPARATION

A. Work by Others: Examine all work prepared by others to receive work of this Section and report any defects affecting installation to Design Professionals. Commencement of work will be construed as complete acceptance of preparatory work by others. The Contractor alone shall be responsible for checking the dimensions and coordination of the structural steel work with other trades.

B. Anchor Rods: At least 20 working days prior to the start of the structural steel erection, the Contractor shall ascertain by accurate survey the existing location, alignment, and elevation of the anchor rods embedded in the concrete by others. The Contractor shall immediately bring to the attention of the Design Professionals any discrepancies observed between the Contract Documents and the as-built conditions. Steel erection shall not start until corrective measures, if required, have been performed.

3.2 FABRICATION

A. Fabricate and assemble structural steel in the shop to the greatest extent possible.

B. Tolerances:

1. Conform to the tolerances of the AISC "Code of Standard Practice," compensate for the difference between the temperature at time of fabrication and the mean temperature in service.
2. Elevator shafts used for temporary hoists shall conform to the detailed requirements of the hoist manufacturer.
3. Conform to the tolerances of the AISC "Code of Standard Practice", Section 10 (AESS) for architecturally exposed structural steel as indicated as “AESS” on the Drawings.

C. Holes: Holes shall be provided in members to permit connections to the work of other trades or contracts, and for passage through the member of work of other trades. All holes shall be accurately drilled or punched at right angles to the surface of the metal in accordance with AISC Specifications. Holes shall not be

made or enlarged by burning. Burning or drifting unfair holes will not be permitted. Holes that must be enlarged shall be reamed. Drift pins will be allowed only to bring together the several parts for connection. Holes in base plates shall be drilled. Holes shall be clean-cut without torn or ragged edges. Outside burrs resulting from drilling operations shall be removed with a suitable tool.

D. Camber: Provide camber as indicated on the Contract Documents. Where no camber is indicated, provide natural camber up.

E. Cutting: Manual gas-cutting in the shop may be used only if automatic or semi-automatic methods are not possible. If manual shop cutting is required, it shall be done only with a mechanically guided torch, except that an unguided torch may be used where the cut is more than 1/2 inch (12mm) from the finished dimension and final removal is completed by means such as chipping or grinding to produce a gouge-free surface of quality equal to that of the base metal. At restrained joints and as indicated elsewhere, weld access holes shall be ground smooth.

F. Cutting of Heavy Shapes: Where “Heavy Shapes” as defined in this Specification are to be joined by partial or full penetration welds in tension, preheating shall be required for all thermal cutting operations. Preheat shall be sufficient to prevent cracking but in no case less than 150 degrees F (65°C). Weld access holes and copes shall be ground to a smooth radius after cutting and tested for cracks by the magnetic particle method. All cut edges shall be free of sharp notches and gouges.

G. Anchor Rods: Rigid steel templates and anchor rods shall be furnished, labeled and shipped in sets indicating sizes and locations of columns, together with instructions for setting of anchor rods. Plate washers per Typical Details shall be provided.

H. Bolting: Bolts shall be driven accurately into the holes without damaging the threads. Bolt heads shall be protected from damage during driving. Bolt heads and nuts shall rest squarely against the metal. Where bolts are to be used on beveled surfaces having slopes greater than 1 in 20 with a plane normal to the bolt axis, beveled washers shall be provided to give full bearing under the head or nut.

I. Bolts indicated as “finger tight” on the Contract Documents shall be prevented from backing off by using lock nuts, thread compound or deformed threads.

J. Installation of High Strength Bolts:

1. Except where "snug tight" installation is specifically permitted on design Drawings, all high strength bolts shall be installed with full pretension using Turn-of-Nut Pretensioning, Twist-Off Type Tension Control Bolt Pretensioning or Direct-Tension-Indicator (DTI) Pretensioning in accordance with the "Specification for Structural Joints Using ASTM A325 or A490 Bolts". Calibrated Wrench Pretensioning shall only be used where specifically approved by the SER.

2. Comply with special washer requirements of the RCSC, such as those related to slotted and oversize holes, and tapered flanges. DTI "washers" shall not be substituted for such required washers.
3. All high strength bolt assemblies (including Tension Control bolts and DTI's) used in pretensioned connections shall be verified in accordance with the Pre-Installation Verification section of the RCSC.
4. Clean and re-lubricate bolts and nuts that become dry or rusty before use, except Tension Control bolts must be re-lubricated by manufacturer.

K. Welding of Structural Steel:

1. Pre-Weld Inspection: The surface to be welded and the filler material to be used shall be subject to inspection before welding is performed.
2. Welds indicated on the Contract Documents or the approved shop or erection drawings shall be created by electric arc welding processes that comply in all respects with the codes and specifications herein noted covering the design, fabrication, and inspection of welded structures and the qualifications of welders and supervisors. Control the heat input, weld length, weld sequence and cooling process to prevent distortion of the completed assembly.
3. Each welder's work shall be traceable.
4. Special Requirements: For high restraint welds and welds at heavy shapes, follow approved welding procedures for weld process, sequence, pre-heating and cooling. Use stress relieving techniques where shown in the approved procedure developed by the Contractor's Welding Consultant.

    a) Special Procedures: Prior to the start of production welding, the contractor shall demonstrate to the Testing Agency that preheat can be maintained without relying on heat from the arc. For field welding, the contractor shall provide a shelter to protect each joint from inclement weather (rain, snow, etc.), from start until completion of the joint.
    b) Preheat and Postheat: Preheat shall be sufficient to prevent cracking, but in no case less than required by AWS D1.1. For high-restraint welds, minimum preheat shall be 225 degrees F (105°C). The preheat shall be maintained throughout the thickness of the material for a distance equal to twice the material thickness on both sides of the joint at a minimum. Where different thicknesses of steel are being joined, the greater thickness shall govern. Preheat shall be measured on the face opposite the side of the heat application. Preheat shall be applied uniformly in a manner that does not harm the surface of the material nor cause surface temperatures to exceed 1100 degrees F (600°C). Should stress relief heat treatment be required, the contractor shall submit a written procedure.
    c) Prior to heat treatment on a production weld, prepare and treat a test sample per the contractor's written procedure for tensile tests in accordance with ASTM requirements.

5. Deficient Welds: Welds found deficient in dimensions but not in quality may be enlarged by additional welding. Any weld found deficient in quality shall be removed by grinding or melting and the weld shall be remade.

L. Bearing:

1. Bearing ends of columns shall be milled or sawn square perpendicular to axis of the column.
2. Finish bearing areas of base plates per AISC M2.8.

M. Stiffeners: Fitted stiffeners shall be ground to fit closely against flanges.

N. Cleaning and Preparation of Steel Surfaces:

1. Clean all steel work in accordance with the Society for Protective Coatings (SSPC) Method specified herein that corresponds to its location and exposure. Steel work to be painted shall be painted within the same day that it is cleaned.

a) Interior, Not Exposed to View (above suspended ceilings, under sprayed-on fireproofing, steel to be encased in concrete): SSPC-SP-2, Hand Tool Cleaning.
b) Interior, Exposed in the Finished Building: SSPC-SP-6, Commercial Blast Cleaning, unless noted otherwise on the Drawings.
c) Exterior (exposed to weather or in unconditioned space): SSPC-SP-6, Commercial Blast Cleaning, unless noted otherwise on the Drawings.
d) Architecturally Exposed Structural Steel where indicated on the Contract Documents as “AESS”: SSPC-SP-10, Near White Blast. Members to be Hot Dipped Galvanized: SSPC-SP3, Power Tool Cleaning, before galvanizing.

O. Shop Coating:

1. Where painting is specified, paint all steel work in accordance with the Society for Protective Coatings (SSPC) Method specified herein that corresponds to its location and exposure and in accordance with manufacturer's written instructions. Paint steel work the same day that it is cleaned.

a) Interior, Not Exposed to View (above suspended ceilings, under sprayed-on fireproofing, steel to be encased in concrete): No Paint.
b) Interior, Exposed in the Finished Building: SSPC – Paint 25
c) Exterior (exposed to weather or in unconditioned space): SSPC – Paint 20
d) Architecturally Exposed Structural Steel (AESS) to receive a 2 or 3 coat paint system.

2. Protect finished bearing surfaces with a rust-inhibiting coating which is to be removed immediately prior to erection.
3. Do not paint:

    a) Surfaces within six (6) inches (150mm) of field welds
    b) Surfaces to be encased in concrete or to receive cementitious fireproofing
    c) Contact surfaces of high-strength bolted Slip Critical connections (unless surface prep and paint has been specifically prequalified by the contractor or approved for use in this location by the SER)
    d) Surfaces required for testing and preheat, until all testing and preheat has been performed
    e) Finished bearing surfaces (use removable rust-inhibiting coating)
    f) Top flange of the beam where steel deck or headed studs are to be attached

4. Paint shall be applied thoroughly and evenly to dry surfaces only when surface temperatures are above dew-point, in strict accordance with manufacturer's instructions.
5. Surfaces of exterior members which are inaccessible after assembly or erection shall receive their second coat of the approved paint, in a different shade, in the shop.
6. Hot-dip galvanize the following steel members:

    a) All angles, steel plates and shims supporting exterior masonry or exposed to the weather, including shelf, arch and relieving angles
    b) All connections between the above angles and steel plates and the supporting structural member, including clip angles and hardware
    c) Any other steel members indicated as “Galvanized” on the Contract Documents.
    d) All miscellaneous metal, angles, clips, etc. on exterior masonry walls.

3.3 ERECTION

A. Tolerances: Erect all work plumb, square and true to lines and levels in strict accordance with the structural requirements of the building within tolerances of the AISC Code of Standard Practice, unless otherwise indicated on the Contract Documents. Compensate for the difference between the temperature at time of erection and the mean temperature in service.

B. Bracing: Brace the frame during erection in accordance with the Contractor’s erection procedure.

C. Errors: Immediately report to the Design Professionals any errors in shop fabrication, deformations resulting from handling and transportation, and improper erection that affects the assembly and fitting of parts. Prepare details for corrective work and obtain approval of the method of correction. Approved corrections shall be made expeditiously at the sole expense of the Contractor.

D. Column Base Plates: Support and align on steel shims or setting bolts. After the supported members have been plumbed and properly positioned, tighten anchor rod nuts in preparation for grouting. Cut off wedges and shims flush with edges of plates and leave in place. The use of leveling plates will not be permitted.

E. Grouting: Refer to General Notes. Grout base plates immediately after the first tier of columns are plumbed. Do not proceed with steel erection above the first tier until base plates are grouted.

F. Bolting and Welding of Structural Steel: See Section on "Fabrication".

G. Bearing Surface: Clean bearing surfaces and surfaces that will be in permanent contact before the members are assembled.

H. Splices: Splices will be permitted only where indicated on the Contract Drawings or the reviewed shop drawings. Fasten splices of compression members only after surfaces are cleaned and abutting surfaces have been brought completely into contact. Fill any remaining gaps with steel shims driven into place and cut flush. Tack weld shims to each other and to members. Use runoff tabs at bevel weld splices. Cut off runoff tabs and ground smooth after weld completion.

I. Driftpins: Driftpins may be used only to bring together the several parts, and shall not be used in such a manner as to distort or damage the metal. Correct poor matching of holes by drilling to the next larger size and using a larger size bolt. Plug welding and redrilling will not be permitted, unless a specific instance arises and is approved by the SER.

J. Erection bolts: On exposed welded construction, remove erection bolts, fill holes with plug welds and grind smooth at exposed surfaces. On non-exposed welded construction, remove erection bolts.

K. Hammering: Hammering which may damage or distort the members will not be permitted.

L. Do not use cutting torches in the field without the specific approval of the SER for each application. Where cutting torch use is permitted, all the requirements of the Section on "Fabrication" shall apply.

M. Additional Material and Labor: If the Contractor furnishes additional material and labor for the purpose of erection or if the erection method requires that material be added to certain members, the required modifications shall be at the sole expense of the Contractor.

N. Alignment: Following erection, accurately align, level, and adjust all members prior to final fastening. Conform to AISC standard tolerances unless otherwise noted in the Contract Documents.

O. Touch-Up and Field Applied Paint: After erection, clean all damaged areas in the shop coat, exposed surfaces of bolts, bolt heads, nuts and washers and all field welds and unpainted areas adjacent to field welds according to manufacturers recommendations and paint with the same paint used for the shop coat. Match the touch up and field applied paint color to the as-built paint color. After touch

up, at exterior (exposed to the weather or in unconditioned space) steel members apply a full coat of the specified paint in a different shade than the shop applied coat.

P. After erection, clean all damaged galvanized areas, welds and areas adjacent to welds and paint with the specified galvanizing repair paint.

Q. Clean all steel members of mud and debris and construction residue prior to erection.

R. Headed Studs and Deformed Bar Anchors:

1. End weld headed studs and deformed bar anchors with an automatic process in accordance with section 7 of AWS D1.1.
2. Areas to which studs are to be attached must be free of foreign material, such as rust, oil, grease, paint etc. When mill scale is sufficiently thick to cause difficulty in obtaining proper welds, remove by grinding or sand blasting.
3. Remove ceramic ferrules from studs and work after welding.

3.4 CORRECTIVE MEASURES

A. Conflicts: The Contractor shall be solely responsible for errors of detailing, fabrication, and erection of structural steel, and steel deck.

B. Compensation for Additional Services: Should additional work by Design Professionals such as design, drafting, meetings and/or visits be required which are necessitated by failure of the Contractor to perform the work in accordance with the Contract Documents either developing corrective actions or reviewing corrective actions developed by others, the Contractor is responsible for paying for additional work performed by the Design Professionals at their standard firm-wide billing rates plus out-of-pocket expenses incurred at cost + 10%. Additional costs for testing and inspection by the Owner shall also be compensated by the Contractor.

[Balance of page blank; see form on next page]

Structural Substitution Request Form – to be completed by Contractor

Project:		
Date:		Substitution Request #
Requesting Contractor:		Pages Attached (including this form)

1. Description of Requested Substitution:

2. Related Drawings and Specification Sections:

3. Rationale or Benefit Anticipated:

4. Effect on Construction Schedule[1] (check one): ☐ NONE ☐ See Attached

5. Effect on Owner's Cost[2] attach data (check one): ☐ CREDIT TO OWNER ☐ EXTRA

6. Effect on Construction Documents[3] (design work anticipated): ☐ NONE ☐ See Attached

7. Requesting Contractor Agrees to Pay for Design Changes (check): ☐ YES ☐ NO ☐ NOT APPLICABLE

8. Effect on Other Trades[4]:

9. Effect of Substitution on Manufacturer's Warranty (check): ☐ NONE ☐ See Attachment

Signature[5]: Date:

Company:

General Contractor Signature[5]: Date:

Notes:

1. Contractor is responsible for means and methods and any problems that may arise from making the requested substitution.
2. This is NOT A CHANGE ORDER FORM. A separate form is required to adjust costs and/or schedules.
3. Contractor is responsible for any design impacts that may arise from this substitution, including redesign efforts.
4. Contractor is responsible for effects on other trades from this substitution;
   General Contractor must review and agree effects on other trades are fairly represented in items 4-9.
5. Signature by a person having authority to legally bind his/her company to the above terms. Otherwise this request is void
6. All items in form must be completed for substitution request to be considered.

Request Review Responses (completed by Architect and/or Engineer(s)):

ACCEPTED	ACCEPTED AS NOTED	REJECTED	INSUFFICIENT DATA TO SUPPORT REQUEST	ENGINEER / ARCH / MEP SIGNATURE	DATE

Engineer/Architect Comments:

END OF SECTION

SECTION 05 52 13 - PIPE RAILINGS

PART 1 GENERAL 1.01 SECTION INCLUDES

A. Stair railings and guardrails.

1.02 RELATED REQUIREMENTS

A. Section 03 30 00 - Cast-in-Place Concrete: Placement of anchors in concrete.

B. Section 09 91 23 - Interior Painting: Paint finish.

1.03 REFERENCE STANDARDS

A. ASTM A53/A53M - Standard Specification for Pipe, Steel, Black and Hot-Dipped, Zinc-Coated, Welded and Seamless; 2012.

B. ASTM A123/A123M - Standard Specification for Zinc (Hot-Dip Galvanized) Coatings on Iron and Steel Products[].

C. ASTM E985 - Standard Specification for Permanent Metal Railing Systems and Rails for Buildings; 2000 (Reapproved 2006).

D. SSPC-Paint 15 - Steel Joist Shop Paint[].

E. SSPC-Paint 20 - Zinc-Rich Primers (Type I, "Inorganic," and Type II, "Organic")[].

F. UL 1994 - Luminous Egress Path Marking Systems[].

1.04 SUBMITTALS

A. See Section 01 30 00 - Administrative Requirements, for submittal procedures.

B. Shop Drawings: Indicate profiles, sizes, connection attachments, anchorage, size and type of fasteners, and accessories.

PART 2 PRODUCTS 2.01 RAILINGS - GENERAL REQUIREMENTS

A. Design, fabricate, and test railing assemblies in accordance with the most stringent requirements of ASTM E985 and applicable local code.

B. Allow for expansion and contraction of members and building movement without damage to connections or members.

C. Dimensions: See drawings for configurations and heights.
   1. Top Rails and Wall Rails: 1-1/4 inches inside diameter, round.
   2. Intermediate Rails: 1-1/4 inches inside diameter, round.
   3. Posts: 1-1/4 inches inside diameter, round.

D. Provide anchors and other components as required to attach to structure, made of same materials as railing components unless otherwise indicated; where exposed fasteners are unavoidable provide flush countersunk fasteners.
   1. For anchorage to concrete, provide inserts to be cast into concrete, for bolting anchors.

E. Provide [welding fittings] to join lengths, seal open ends, and conceal exposed mounting bolts and nuts, including but not limited to elbows, T-shapes, splice connectors, flanges, escutcheons, and wall brackets.

2.02 STEEL RAILING SYSTEM

A. Steel Pipe: ASTM A53/A53M, Grade B Schedule 40, black finish.

B. Welding Fittings: Factory- or shop-welded from matching pipe or tube; seams continuously welded; joints and seams ground smooth.

C. Exposed Fasteners: Flush countersunk screws or bolts; consistent with design of railing.

D. Straight Splice Connectors: Steel concealed spigots.

E. Galvanizing: In accordance with requirements of ASTM A123/A123M.

1. Touch-Up Primer for Galvanized Surfaces: SSPC-Paint 20, Type I - Inorganic.

F. Shop and Touch-Up Primer: SSPC-Paint 15, complying with VOC limitations of authorities having jurisdiction.

2.03 FABRICATION

A. Accurately form components to suit specific project conditions and for proper connection to building structure.

B. Fit and shop assemble components in largest practical sizes for delivery to site.

C. Fabricate components with joints tightly fitted and secured. Provide spigots and sleeves to accommodate site assembly and installation. D. Welded Joints:

1. Interior Components: Continuously seal joined pieces by intermittent welds and plastic filler.
2. Grind exposed joints flush and smooth with adjacent finish surface. Make exposed joints butt tight, flush, and hairline. Ease exposed edges to small uniform radius.

PART 3 EXECUTION 3.01 EXAMINATION

A. Verify that field conditions are acceptable and are ready to receive work.

3.02 PREPARATION

A. Supply items required to be cast into concrete or embedded in masonry with setting templates, for installation as work of other sections.

B. Apply one coat of bituminous paint to concealed aluminum surfaces that will be in contact with cementitious or dissimilar materials.

3.03 INSTALLATION

A. Install in accordance with manufacturer's instructions.

B. Install components plumb and level, accurately fitted, free from distortion or defects, with tight joints.

C. Anchor railings securely to structure.

D. Conceal anchor bolts and screws whenever possible. Where not concealed, use flush countersunk fastenings.

3.04 TOLERANCES

A. Maximum Variation From Plumb: 1/4 inch per floor level, non-cumulative.

B. Maximum Offset From True Alignment: 1/4 inch.

C. Maximum Out-of-Position: 1/4 inch.

END OF SECTION

SECTION 06 10 00 - ROUGH CARPENTRY

PART 1 - GENERAL

1.1 RELATED DOCUMENTS

A. Drawings and general provisions of the Contract, including General and Supplementary Conditions and Division 01 Specification Sections, apply to this Section.

1.2 SUMMARY

A. Section Includes:

1. Framing with dimension lumber.
2. Framing with timber.
3. Framing with engineered wood products.
4. Shear wall panels.
5. Rooftop equipment bases and support curbs.
6. Wood blocking**,** and nailers.
7. Wood furring.
8. Wood sleepers.
9. Utility shelving.
10. Plywood backing panels.

B. Related Requirements:
1. Section 06 18 00 "Glued-Laminated Construction" for items associated with structural glued-laminated timber.
2. Section 06 15 16 "Wood Roof Decking" for wood roof decking.

1.3 DEFINITIONS

A. Exposed Framing: Framing not concealed by other construction.

B. Dimension Lumber: Lumber of 2 inches nominal (38 mm actual) or greater but less than 5 inches nominal (114 mm actual) in least dimension.

C. Timber: Lumber of 5 inches nominal (114 mm actual) or greater in least dimension.

D. Lumber grading agencies, and the abbreviations used to reference them, include the following:

1. NeLMA: Northeastern Lumber Manufacturers' Association.
2. NLGA: National Lumber Grades Authority.
3. RIS: Redwood Inspection Service.
4. SPIB: The Southern Pine Inspection Bureau.
5. WCLIB: West Coast Lumber Inspection Bureau.
6. WWPA: Western Wood Products Association.

1.4 ACTION SUBMITTALS

A. Product Data: For each type of process and factory-fabricated product. Indicate component materials and dimensions and include construction and application details.

1. Include data for wood-preservative treatment from chemical treatment manufacturer and certification by treating plant that treated materials comply with requirements. Indicate type of preservative used and net amount of preservative retained.
2. Include data for fire-retardant treatment from chemical treatment manufacturer and certification by treating plant that treated materials comply with requirements. Include physical properties of treated materials based on testing by a qualified independent testing agency.
3. For fire-retardant treatments, include physical properties of treated lumber both before and after exposure to elevated temperatures, based on testing by a qualified independent testing agency according to ASTM D 5664.
4. For products receiving a waterborne treatment, include statement that moisture content of treated materials was reduced to levels specified before shipment to Project site.
5. Include copies of warranties from chemical treatment manufacturers for each type of treatment.

B. Fastener Patterns: Full-size templates for fasteners in exposed framing.

1.5 INFORMATIONAL SUBMITTALS

A. Material Certificates: For dimension lumber specified to comply with minimum allowable unit stresses. Indicate species and grade selected for each use and design values approved by the ALSC Board of Review.

B. Evaluation Reports: For the following, from ICC-ES:

1. Wood-preservative-treated wood.
2. Fire-retardant-treated wood.
3. Engineered wood products.
4. Shear panels.
5. Power-driven fasteners.
6. Powder-actuated fasteners.
7. Expansion anchors.
8. Metal framing anchors.

1.6 QUALITY ASSURANCE

A. Testing Agency Qualifications: For testing agency providing classification marking for fireretardant treated material, an inspection agency acceptable to authorities having jurisdiction that periodically performs inspections to verify that the material bearing the classification marking is representative of the material tested.

1.7 DELIVERY, STORAGE, AND HANDLING

A. Stack lumber flat with spacers beneath and between each bundle to provide air circulation. Protect lumber from weather by covering with waterproof sheeting, securely anchored. Provide for air circulation around stacks and under coverings.

PART 2 - PRODUCTS

2.1 WOOD PRODUCTS, GENERAL

A. Lumber: DOC PS 20 and applicable rules of grading agencies indicated. If no grading agency is indicated, provide lumber that complies with the applicable rules of any rules-writing agency certified by the ALSC Board of Review. Provide lumber graded by an agency certified by the ALSC Board of Review to inspect and grade lumber under the rules indicated.

1. Factory mark each piece of lumber with grade stamp of grading agency.
2. For exposed lumber indicated to receive a stained or natural finish, **mark grade stamp on end or back of each piece or omit grade stamp and provide certificates of grade compliance issued by grading agency**.
3. Where nominal sizes are indicated, provide actual sizes required by DOC PS 20 for moisture content specified. Where actual sizes are indicated, they are minimum dressed sizes for dry lumber.
4. Provide dressed lumber, S4S, unless otherwise indicated.

B. Maximum Moisture Content of Lumber: TBD unless otherwise indicated.

C. Engineered Wood Products: Provide engineered wood products acceptable to authorities having jurisdiction and for which current model code research or evaluation reports exist that show compliance with building code in effect for Project.

1. Allowable Design Stresses: Provide engineered wood products with allowable design stresses, as published by manufacturer, that meet or exceed those indicated. Manufacturer's published values shall be determined from empirical data or by rational engineering analysis and demonstrated by comprehensive testing performed by a qualified independent testing agency.

2.2 WOOD-PRESERVATIVE-TREATED LUMBER

A. Preservative Treatment by Pressure Process: AWPA U1; Use Category UC2 **for interior construction not in contact with the ground, Use Category UC3b for exterior construction not in contact with the ground, and Use Category UC4a for items in contact with the ground**.

1. Preservative Chemicals: Acceptable to authorities having jurisdiction and containing no arsenic or chromium. **Do not use inorganic boron (SBX) for sill plates.**
2. For exposed items indicated to receive a stained or natural finish, use chemical formulations that do not require incising, contain colorants, bleed through, or otherwise adversely affect finishes.

B. Kiln-dry lumber after treatment to a maximum moisture content of 19 percent. Do not use material that is warped or that does not comply with requirements for untreated material.

C. Mark lumber with treatment quality mark of an inspection agency approved by the ALSC Board of Review.

1. For exposed lumber indicated to receive a stained or natural finish, **mark end or back of each piece or omit marking and provide certificates of treatment compliance issued by inspection agency**.

2.3 FIRE-RETARDANT-TREATED MATERIALS

A. General: Where fire-retardant-treated materials are indicated, use materials complying with requirements in this article, that are acceptable to authorities having jurisdiction, and with firetest-response characteristics specified as determined by testing identical products per test method indicated by a qualified testing agency.

B. Fire-Retardant-Treated Lumber and Plywood by Pressure Process: Products with a flame spread index of 25 or less when tested according to ASTM E 84, and with no evidence of significant progressive combustion when the test is extended an additional 20 minutes, and with the flame front not extending more than 10.5 feet (3.2 m) beyond the centerline of the burners at any time during the test.

1. Use treatment that does not promote corrosion of metal fasteners.
2. Exterior Type: Treated materials shall comply with requirements specified above for fireretardant-treated lumber and plywood by pressure process after being subjected to accelerated weathering according to ASTM D 2898. Use for exterior locations and where indicated.
3. Interior Type A: Treated materials shall have a moisture content of 28 percent or less when tested according to ASTM D 3201 at 92 percent relative humidity. Use where exterior type is not indicated.
4. Design Value Adjustment Factors: Treated lumber shall be tested according ASTM D 5664 and design value adjustment factors shall be calculated according to ASTM D 6841.

C. Kiln-dry lumber after treatment to a maximum moisture content of 19 percent. **Kiln-dry plywood after treatment to a maximum moisture content of 15 percent.**

D. Identify fire-retardant-treated wood with appropriate classification marking of qualified testing agency.

1. For exposed lumber indicated to receive a stained or natural finish, **mark end or back of each piece or omit marking and provide certificates of treatment compliance issued by testing agency**.

E. For exposed items indicated to receive a stained or natural finish, use chemical formulations that do not bleed through, contain colorants, or otherwise adversely affect finishes. F. Application: Treat **all rough carpentry unless otherwise indicated.**

2.4 DIMENSION LUMBER FRAMING

A. Joists and Rafters**Select Structural, No. 1, No. 2** grade and the properties listed on the structural drawings.

1. Species:

a. Hem-fir (north); NLGA.
b. Southern pine; SPIB.
c. Douglas fir-larch; WCLIB or WWPA.

d. Mixed southern pine; SPIB.
e. Spruce-pine-fir; NLGA.
f. Douglas fir-south; WWPA.
g. Hem-fir; WCLIB or WWPA.

h. Douglas fir-larch (north); NLGA.
i. Spruce-pine-fir (south); NeLMA, WCLIB, or WWPA.

B. Exposed Framing: Provide material hand-selected for uniformity of appearance and freedom from characteristics, on exposed surfaces and edges, that would impair finish appearance, including decay, honeycomb, knot-holes, shake, splits, torn grain, and wane.

1. Application: Exposed **exterior and interior** framing **indicated to receive a stained or natural finish**.
2. Species and Grade: As indicated above for load-bearing construction of same type.

2.5 ENGINEERED WOOD PRODUCTS

A. Engineered Wood Products, General: Products shall **contain no urea formaldehyde.**

B. Source Limitations: Obtain each type of engineered wood product from single source from a single manufacturer.

2.6 MISCELLANEOUS LUMBER

A. General: Provide miscellaneous lumber indicated and lumber for support or attachment of other construction, including the following:

1. Blocking.
2. Nailers.
3. Rooftop equipment bases and support curbs.
4. Cants.
5. Furring.
6. Grounds.
7. Utility shelving.

8. For items of dimension lumber size, provide **Construction or No. 2** grade lumber any any species. Approval by architect is required if exposed. Hem-fir (north); NLGA.
9. Mixed southern pine; SPIB.
10. Spruce-pine-fir; NLGA.
11. Hem-fir; WCLIB or WWPA.
12. Spruce-pine-fir (south); NeLMA, WCLIB, or WWPA.
13. Western woods; WCLIB or WWPA.
14. Northern species; NLGA.
15. Eastern softwoods; NeLMA.

B. For utility shelving, provide lumber with **15** percent maximum moisture content and **any of** the following species and grades:

1. Eastern white pine, Idaho white, lodgepole, ponderosa, or sugar pine; [**Premium or No. 2 Common (Sterling)**] [**Standard or No. 3 Common**] grade; NeLMA, NLGA, WCLIB, or WWPA.
2. Mixed southern pine; No. [**1**] [**2**] grade; SPIB.
3. Hem-fir or hem-fir (north); [**Select Merchantable or No. 1 Common**] [**Construction or No. 2 Common**] grade; NLGA, WCLIB, or WWPA.
4. Spruce-pine-fir (south) or spruce-pine-fir; [**Select Merchantable or No. 1 Common**] [**Construction or No. 2 Common**] grade; NeLMA, NLGA, WCLIB, or WWPA.

C. For concealed boards, provide lumber with [**15**] [**19**] percent maximum moisture content and [**any of**]the following species and grades:

1. Mixed southern pine; No. [**2**] [**3**] grade; SPIB.
2. Hem-fir or hem-fir (north); **Construction or No. 2 Common** grade; NLGA, WCLIB, or WWPA.
3. Spruce-pine-fir (south) or spruce-pine-fir; **Construction or No. 2 Common** grade; NeLMA, NLGA, WCLIB, or WWPA.
4. Eastern softwoods; No. **2** Common grade; NeLMA.
5. Northern species; No. **2** Common grade; NLGA.
6. Western woods; **Construction or No. 2 Common**grade; WCLIB or WWPA.

D. For blocking not used for attachment of other construction, Utility, Stud, or No. 3 grade lumber of any species may be used provided that it is cut and selected to eliminate defects that will interfere with its attachment and purpose.

E. For blocking and nailers used for attachment of other construction, select and cut lumber to eliminate knots and other defects that will interfere with attachment of other work.

F. For furring strips for installing plywood or hardboard paneling, select boards with no knots capable of producing bent-over nails and damage to paneling.

2.7 CONSTRUCTION PANELS

A. Communications and Electrical Room Mounting Boards: 3/4 inch thickness.

1. Cement-Based Board: Non-gypsum based, cementitious board complying with ASTM C1288.
   a. Products:
   1) James Hardie Building Products, Inc; Hardibacker Cement Board.
   2) USG Corporation; Fiberock Aqua-Tough Interior Panels.
   3) Substitutions: See section 01 60 00 - Product Requirements.

2.8 FASTENERS

A. General: Provide fasteners of size and type indicated that comply with requirements specified in this article for material and manufacture.

1. Where rough carpentry is exposed to weather, in ground contact, pressure-preservative treated, or in area of high relative humidity, provide fasteners **with hot-dip zinc coating complying with ASTM A 153/A 153M** or **of Type 304 stainless steel**. B. Nails, Brads, and Staples: ASTM F 1667.

C. Power-Driven Fasteners: NES NER-272.

D. Wood Screws: ASME B18.6.1.

E. Lag Bolts: ASME B18.2.1 (ASME B18.2.3.8M).

F. Bolts: Steel bolts complying with ASTM A 307, Grade A (ASTM F 568M, Property Class 4.6); with ASTM A 563 (ASTM A 563M) hex nuts and, where indicated, flat washers.

G. Expansion Anchors: Anchor bolt and sleeve assembly of material indicated below with capability to sustain, without failure, a load equal to six times the load imposed when installed in unit masonry assemblies and equal to four times the load imposed when installed in concrete as determined by testing per ASTM E 488 conducted by a qualified independent testing and inspecting agency.

1. Material: Carbon-steel components, zinc plated to comply with ASTM B 633, Class Fe/Zn 5.
2. Material: Stainless steel with bolts and nuts complying with ASTM F 593 and ASTM F 594, Alloy Group 1 or 2 (ASTM F 738M and ASTM F 836M, Grade A1 or A4).

2.9 METAL FRAMING ANCHORS

A. Per structural drawings

2.10 MISCELLANEOUS MATERIALS

A. Sill-Sealer Gaskets: Glass-fiber-resilient insulation, fabricated in strip form, for use as a sill sealer; 1-inch (25-mm) nominal thickness, compressible to 1/32 inch (0.8 mm); selected from manufacturer's standard widths to suit width of sill members indicated.

B. Sill-Sealer Gaskets: Closed-cell neoprene foam, 1/4 inch (6.4 mm) thick, selected from manufacturer's standard widths to suit width of sill members indicated.

C. Flexible Flashing: Composite, self-adhesive, flashing product consisting of a pliable, **butyl rubber or rubberized-asphalt** compound, bonded to a high-density polyethylene film, aluminum foil, or spunbonded polyolefin to produce an overall thickness of not less than 0.025 inch (0.6 mm).

D. Adhesives for Gluing **Furring and Sleepers** to Concrete or Masonry: Formulation complying with ASTM D 3498 that is approved for use indicated by adhesive manufacturer.

1. Adhesives shall have a VOC content of **70**g/L or less when calculated according to 40 CFR 59, Subpart D (EPA Method 24).
2. Adhesives shall comply with the testing and product requirements of the California Department of Health Services' "Standard Practice for the Testing of Volatile Organic Emissions from Various Sources Using Small-Scale Environmental Chambers."

E. Water-Repellent Preservative: NWWDA-tested and -accepted formulation containing 3-iodo-2propynyl butyl carbamate, combined with an insecticide containing chloropyrifos as its active ingredient.

PART 3 - EXECUTION

3.1 INSTALLATION, GENERAL

A. Set rough carpentry to required levels and lines, with members plumb, true to line, cut, and fitted. Fit rough carpentry to other construction; scribe and cope as needed for accurate fit. Locate **furring,** nailers, blocking, **grounds,** and similar supports to comply with requirements for attaching other construction.

B. Framing Standard: Comply with AF&PA's WCD 1, "Details for Conventional Wood Frame Construction," unless otherwise indicated.

C. Framing with Engineered Wood Products: Install engineered wood products to comply with manufacturer's written instructions.

D. Install plywood backing panels by fastening to studs; coordinate locations with utilities requiring backing panels. **Install fire-retardant treated plywood backing panels with classification marking of testing agency exposed to view.**

E. Shear Wall Panels: Install shear wall panels to comply with manufacturer's written instructions.

F. Metal Framing Anchors: Install metal framing anchors to comply with manufacturer's written instructions. Install fasteners through each fastener hole.

G. Install sill sealer gasket to form continuous seal between sill plates and foundation walls.

H. Do not splice structural members between supports unless otherwise indicated.

I. Provide blocking and framing as indicated and as required to support facing materials, fixtures, specialty items, and trim.

1. Provide metal clips for fastening gypsum board or lath at corners and intersections where framing or blocking does not provide a surface for fastening edges of panels. Space clips not more than 16 inches (406 mm) o.c.

J. Provide fire blocking in furred spaces, stud spaces, and other concealed cavities as indicated and as follows:

1. Fire block furred spaces of walls, at each floor level, at ceiling, and at not more than 96 inches (2438 mm) o.c. with solid wood blocking or noncombustible materials accurately fitted to close furred spaces.
2. Fire block concealed spaces of wood-framed walls and partitions at each floor level, at ceiling line of top story, and at not more than 96 inches (2438 mm) o.c. Where fire blocking is not inherent in framing system used, provide closely fitted solid wood blocks of same width as framing members and 2-inch nominal- (38-mm actual-) thickness.
3. Fire block concealed spaces between floor sleepers with same material as sleepers to limit concealed spaces to not more than 100 sq. ft. (9.3 sq. m) and to solidly fill space below partitions.
4. Fire block concealed spaces behind combustible cornices and exterior trim at not more than 20 feet (6 m) o.c.

K. Sort and select lumber so that natural characteristics will not interfere with installation or with fastening other materials to lumber. Do not use materials with defects that interfere with function of member or pieces that are too small to use with minimum number of joints or optimum joint arrangement.

L. Comply with AWPA M4 for applying field treatment to cut surfaces of preservative-treated lumber.

1. Use inorganic boron for items that are continuously protected from liquid water. 2. Use copper naphthenate for items not continuously protected from liquid water.

M. Securely attach rough carpentry work to substrate by anchoring and fastening as indicated, complying with the following:

1. NES NER-272 for power-driven fasteners.
2. Table 2304.9.1, "Fastening Schedule," in ICC's International Building Code.
3. Table R602.3(1), "Fastener Schedule for Structural Members," and Table R602.3(2), "Alternate Attachments," in ICC's International Residential Code for One- and Two-Family Dwellings.

N. Use steel common nails unless otherwise indicated. Select fasteners of size that will not fully penetrate members where opposite side will be exposed to view or will receive finish materials. Make tight connections between members. Install fasteners without splitting wood. Drive nails snug but do not countersink nail heads unless otherwise indicated.

O. For exposed work, arrange fasteners in straight rows parallel with edges of members, with fasteners evenly spaced, and with adjacent rows staggered.

1. Comply with **approved** or **indicated** fastener patterns where applicable. **Before fastening, mark fastener locations, using a template made of sheet metal, plastic, or cardboard.**
2. Use finishing nails unless otherwise indicated. Countersink nail heads and fill holes with wood filler.
3. Use common nails unless otherwise indicated. Drive nails snug but do not countersink nail heads.

3.2 WOOD **GROUND, SLEEPER,** BLOCKING, AND NAILER INSTALLATION

A. Install where indicated and where required for **screeding or** attaching other work. Form to shapes indicated and cut as required for true line and level of attached work. Coordinate locations with other work involved.

B. Attach items to substrates to support applied loading. Recess bolts and nuts flush with surfaces unless otherwise indicated.

C. Where wood-preservative-treated lumber is installed adjacent to metal decking, install continuous flexible flashing separator between wood and metal decking.

D. Provide permanent grounds of dressed, pressure-preservative-treated, key-beveled lumber not less than 1-1/2 inches (38 mm) wide and of thickness required to bring face of ground to exact thickness of finish material. Remove temporary grounds when no longer required.

3.3 WOOD FURRING INSTALLATION

A. Install level and plumb with closure strips at edges and openings. Shim with wood as required for tolerance of finish work.

B. Furring to Receive Plywood or Hardboard Paneling: Install 1-by-3-inch nominal- (19-by-63-mm actual-) size furring **horizontally and vertically** at [**24 inches (610 mm)**] o.c.

C. Furring to Receive **Gypsum Board Plaster Lath**: Install 1-by-2-inch nominal- (19-by-38-mm actual-) size furring vertically at [**16 inches (406 mm)**] o.c.

3.4 CEILING JOIST AND RAFTER FRAMING INSTALLATION

A. As indicated on structural drawings.

3.5 PROTECTION

A. Protect wood that has been treated with inorganic boron (SBX) from weather. If, despite protection, inorganic boron-treated wood becomes wet, apply EPA-registered borate treatment. Apply borate solution by spraying to comply with EPA-registered label.

B. Protect rough carpentry from weather. If, despite protection, rough carpentry becomes **we**], apply EPA-registered borate treatment. Apply borate solution by spraying to comply with EPAregistered label.

END OF SECTION 061000

SECTION 06 15 16 - WOOD ROOF DECKING

PART 1 - GENERAL

1.1 RELATED DOCUMENTS

A. Drawings and general provisions of the Contract, including General and Supplementary Conditions and Division 01 Specification Sections, apply to this Section.

1.2 SUMMARY

A. Section includes **solid-sawn** wood roof decking

B. Related Requirements:

1. Section 06 10 00 "Rough Carpentry" for dimension lumber items associated with wood roof decking.

1.3 ACTION SUBMITTALS

A. Product Data: For each type of product.

1. For glued-laminated wood roof decking, include installation instructions and data on lumber, adhesives, and fabrication.
2. For preservative-treated wood products, include chemical treatment manufacturer's written instructions for handling, storing, installing, and finishing treated material.

B. Samples: 24 inches (600 mm) long, showing the range of variation to be expected in appearance of wood roof decking.

1.4 INFORMATIONAL SUBMITTALS

A. Research/Evaluation Reports: For glued-laminated wood roof decking indicated to be of diaphragm design and construction, from ICC-ES.

1.5 QUALITY ASSURANCE

A. Manufacturer Qualifications: A qualified manufacturer that is certified for chain of custody by an FSC-accredited certification body.

B. Vendor Qualifications: A vendor that is certified for chain of custody by an FSC-accredited certification body.

1.6 DELIVERY, STORAGE, AND HANDLING

A. Schedule delivery of wood roof decking to avoid extended on-site storage and to avoid delaying the Work.

B. Store materials under cover and protected from weather and contact with damp or wet surfaces. Provide for air circulation within and around stacks and under temporary coverings. Stack wood roof decking with surfaces that are to be exposed in the final Work protected from exposure to sunlight.

PART 2 - PRODUCTS

2.1 WOOD ROOF DECKING, GENERAL

A. General: Comply with DOC PS 20 and with applicable grading rules of inspection agencies certified by ALSC's Board of Review.

B. Regional Materials: Wood roof decking shall be manufactured within 500 miles (800 km) of Project site from wood that has been harvested and milled within 500 miles (800 km) of Project site.

C. Regional Materials: Wood roof decking shall be manufactured within 500 miles (800 km) of Project site.

2.2 SOLID-SAWN WOOD ROOF DECKING

A. Standard for Solid-Sawn Wood Roof Decking: Comply with AITC 112.

B. Roof Decking Species: TBD.

C. Roof Decking Nominal Size: TBD.

D. Roof Decking Grade: **SelectCommercial** Decking.

E. Grade Stamps: Factory mark each item with grade stamp of grading agency. Apply grade stamp to surfaces that are not exposed to view.

F. Moisture Content: Provide wood roof decking with **15** percent maximum moisture content at time of dressing.

G. Face Surface: **Smooth**.

H. Edge Pattern: Tongue and Groove.

2.3 PRESERVATIVE TREATMENT

A. Pressure treat wood roof decking according to AWPA U1; Use Category UC2.

1. For laminated roof decking, treat lumber before gluing.

B. Preservative Chemicals: **Acceptable to authorities having jurisdiction and containing no arsenic or chromium**.

1. For exposed items indicated to receive a stained or natural finish, use products that do not contain colorants, bleed through, or otherwise adversely affect finishes. C. Use process that includes water-repellent treatment.

D. Use process that does not include water repellents or other substances that might interfere with application of indicated finishes.

E. After treatment, redry materials to **15** percent maximum moisture content.

F. After dressing and fabricating roof decking, apply **inorganic boron** or **copper naphthenate** according to AWPA M4 to surfaces cut to a depth of more than 1/16 inch (1.5 mm).

2.4 ACCESSORY MATERIALS

A. Fasteners for Solid-Sawn Roof Decking: Provide fastener size and type complying with AITC 112 for thickness of deck used.

B. Fasteners for Glued-Laminated Roof Decking: Provide fastener size and type complying with requirements in "Installation" Article for installing laminated roof decking. C. Nails: Common; complying with ASTM F 1667, Type I, Style 10.

D. Spikes: Round; complying with ASTM F 1667, Type III, Style 3.

E. Fastener Material: Hot-dip galvanized steel.

F. Bolts for Anchoring Roof Decking to Walls: Carbon steel; complying with ASTM A 307 (ASTM F 568M) with ASTM A 563 (ASTM A 563M) hex nuts and, where indicated, flat washers**, all hot-dip zinc coated**.

G. Installation Adhesive: For glued-laminated wood roof decking indicated to be of diaphragm design and construction, provide adhesive that complies with research/evaluation report.

1. Adhesives shall have a VOC content of **70** g/L or less.
2. Adhesives shall comply with the testing and product requirements of the California Department of Public Health's (formerly, the California Department of Health Services') "Standard Method for the Testing and Evaluation of Volatile Organic Chemical Emissions from Indoor Sources Using Environmental Chambers."

H. Sealants: Latex, complying with ASTM C 834 **Type OP, Grade NF** and with applicable requirements in Section 079200 "Joint Sealants," recommended by sealant manufacturer and manufacturer of substrates for intended application.

1. Sealants shall have a VOC content of **250** g/L or less.
2. Sealants shall comply with the testing and product requirements of the California Department of Public Health's (formerly, the California Department of Health Services')

"Standard Method for the Testing and Evaluation of Volatile Organic Chemical Emissions from Indoor Sources Using Environmental Chambers."

I. Penetrating Sealer: Clear sanding sealer complying with Section 099300 "Staining and Transparent Finishing" and compatible with topcoats specified for use over it.

1. Sealers shall have a VOC content of **350** g/L or less.
2. Sealers shall comply with the testing and product requirements of the California Department of Public Health's (formerly, the California Department of Health Services') "Standard Method for the Testing and Evaluation of Volatile Organic Chemical Emissions from Indoor Sources Using Environmental Chambers."

2.5 FABRICATION

A. Shop Fabrication: Where preservative-treated roof decking is indicated, complete cutting, trimming, surfacing, and sanding before treating.

B. Predrill roof decking for lateral spiking to adjacent units to comply with AITC 112.

C. Seal Coat: After fabricating and surfacing roof decking, apply a saturation coat of penetrating sealer **in fabrication shop**.

D. Apply indicated finish materials to comply with Section 099300 "Staining and Transparent Finishing" in fabrication shop.

PART 3 - EXECUTION

3.1 EXAMINATION

A. Examine walls and support framing in areas to receive wood roof decking for compliance with installation tolerances and other conditions affecting performance of wood roof decking. B. Proceed with installation only after unsatisfactory conditions have been corrected.

3.2 INSTALLATION

A. Install solid-sawn wood roof decking to comply with AITC 112.

1. Locate end joints for **two-span continuous lay-up**

B. Install laminated wood roof decking to comply with manufacturer's written instructions.

1. Locate end joints for **two-span continuous lay-up**
2. Nail each course of glued-laminated wood roof decking at each support with one nail slant nailed above the tongue and one nail straight nailed through the face.

a. Use 12d nails for 2-by-6 and 2-by-8 roof decking.

b. Use 30d nails for 3-by-6 and 3-by-8 roof decking.
c. Use 60d nails for 4-by-6 and 4-by-8 roof decking. Predrill roof decking to prevent splitting.
d. Use 30d tongue nails in bottom tongue and 3/8-inch (10-mm) face spikes for 5-by6 and 5-by-8 roof decking. Predrill roof decking at spikes to prevent splitting.

3. Slant nail each course of glued-laminated wood roof decking to the tongue of the adjacent course at 30 inches (750 mm) o.c. and within 12 inches (300 mm) of the end of each unit. Stagger nailing 15 inches (380 mm) in adjacent courses.

a. Use 6d nails for 2-by-6 and 2-by-8 roof decking.
b. Use 8d nails for 3-by-6 and 3-by-8 roof decking.
c. Use 10d nails for 4-by-6 and 4-by-8 roof decking.
d. Use 16d nails for 5-by-6 and 5-by-8 roof decking.

4. Glue adjoining roof decking courses together by applying a 3/8-inch (10-mm) bead of adhesive to the top of tongues, according to research/evaluation report. C. Anchor wood roof decking, where supported on walls, with bolts as indicated.

D. Where preservative-treated roof decking must be cut during erection, apply a field-treatment preservative to comply with AWPA M4.

1. For solid-sawn roof decking, use inorganic boron (SBX).
2. For laminated roof decking, use copper naphthenate.

E. Apply joint sealant to seal roof decking at exterior walls at the following locations:

1. Between roof decking and supports located at exterior walls.
2. Between roof decking and exterior walls that butt against underside of roof decking.
3. Between tongues and grooves of roof decking over exterior walls and supports at exterior walls.

3.3 ADJUSTING

A. Repair damaged surfaces and finishes after completing erection. Replace damaged roof decking if repairs are not approved by Architect.

3.4 PROTECTION

A. Provide water-resistive barrier over roof decking as the Work progresses to protect roof decking until roofing is applied.

B. If, despite protection, roof decking becomes wet, apply EPA-registered borate treatment. Apply borate solution by spraying to comply with EPA-registered label.

END OF SECTION 061516

SECTION 06 18 00 - GLUED-LAMINATED CONSTRUCTION

PART 1 - GENERAL

1.1 RELATED DOCUMENTS

1.2 SUMMARY

A. Section includes framing using structural glued-laminated timber.

B. Related Requirements:
1. Section 06 10 00 "Rough Carpentry" for dimension lumber items associated with structural glued-laminated timber.
2. Section 06 15 16 "Wood Roof Decking" for glued-laminated wood roof decking.

1.3 DEFINITIONS

A. Structural Glued-Laminated (Glulam) Timber: An engineered, stress-rated timber product assembled from selected and prepared wood laminations bonded together with adhesives and with the grain of the laminations approximately parallel longitudinally.

1.4 ACTION SUBMITTALS

A. Product Data: For each type of product.

1. Include data on lumber, adhesives, fabrication, and protection.
2. For preservative-treated wood products. Include chemical treatment manufacturer's written instructions for handling, storing, installing, and finishing treated material.
3. For connectors. Include installation instructions. B. Shop Drawings:

1. Show layout of structural glued-laminated timber system and full dimensions of each member.
2. Indicate species and laminating combination.
3. Include large-scale details of connections.

C. Samples: Full width and depth, 24 inches (600 mm) long, showing the range of variation to be expected in appearance of structural glued-laminated timber **including variations due to specified treatment**.

1. Apply specified factory finish to three sides of half length of each Sample.

D. Delegated-Design Submittal: For structural glued-laminated timber and timber connectors.

1.5 INFORMATIONAL SUBMITTALS

A. Certificates of Conformance: Issued by a qualified testing and inspecting agency indicating that structural glued-laminated timber complies with requirements in AITC A190.1.

B. Material Certificates: For preservative-treated wood products, from manufacturer. Indicate type of preservative used and net amount of preservative retained.

C. Research/Evaluation Reports: For **structural glued-laminated timber and timber connectors**, from ICC-ES.

1.6 QUALITY ASSURANCE

A. Manufacturer Qualifications: **An AITC- or APA-EWS-licensed firm**

1.7 DELIVERY, STORAGE, AND HANDLING

A. General: Comply with provisions in AITC 111.

B. Individually wrap members using plastic-coated paper covering with water-resistant seams.

PART 2 - PRODUCTS

2.1 MANUFACTURERS

A. Manufacturers: Subject to compliance with requirements, **available manufacturers offering products that may be incorporated into the Work include, but are not limited to, the following**:

1. TBD

2.2 PERFORMANCE REQUIREMENTS

A. Delegated Design: Engage a qualified professional engineer, as defined in Division 01 Section "Quality Requirements," to design structural glued-laminated timber and connectors.

B. Structural Performance: Structural glued-laminated timber and connectors shall withstand the effects of structural loads shown on Drawings without exceeding allowable design working stresses listed in AITC 117 or determined according to ASTM D 3737 and acceptable to authorities having jurisdiction.

C. Seismic Performance: Structural glued-laminated timber and connectors shall withstand the effects of earthquake motions determined according to NYC Building Code.

2.3 STRUCTURAL GLUED-LAMINATED TIMBER

A. General: Provide structural glued-laminated timber that complies with AITC A190.1 and AITC 117 or research/evaluation reports acceptable to authorities having jurisdiction.

1. Factory mark each piece of structural glued-laminated timber with AITC Quality Mark or APA-EWS trademark. Place mark on surfaces that are not exposed in the completed Work.
2. Provide structural glued-laminated timber made from single species.

3. Provide structural glued-laminated timber made from solid lumber laminations; do not use laminated veneer lumber.
4. Provide structural glued-laminated timber made with wet-use adhesive complying with AITC A190.1.
5. Adhesive shall not contain urea-formaldehyde resins.
6. Adhesives shall comply with the testing and product requirements of the California Department of Public Health's (formerly, the California Department of Health Services') "Standard Method for the Testing and Evaluation of Volatile Organic Chemical Emissions from Indoor Sources Using Environmental Chambers."

B. Species and Grades for Structural Glued-Laminated Timber: TBD in grades needed to comply with "Performance Requirements" Article. C. Species and Grades for **Beams**:

1. Species and Beam Stress Classification: TBD
2. Lay-up: TBD
3. Species and Combination Symbol: TBD

D. Appearance Grade: TBD, complying with AITC 110.

1. For Premium and Architectural appearance grades, fill voids as required by AITC 110

2.4 PRESERVATIVE TREATMENT

A. Preservative Treatment: Where preservative-treated structural glued-laminated timber is indicated, comply with AWPA U1, Category TBD

1. Use preservative solution without **water repellents or** substances that might interfere with application of indicated finishes.
2. Do not incise structural glued-laminated timber or wood used to produce structural gluedlaminated timber.

B. Preservative: **One of the following:**

1. Oxine copper (copper-8-quinolinolate) in a light petroleum solvent.
2. Pentachlorophenol in light petroleum solvent.
3. Copper naphthenate in a light petroleum solvent.
4. Ammoniacal zinc copper arsenate (ACZA) in a water solution.
5. Chromated copper arsenate (CCA) in a water solution.
6. Ammoniacal copper quat Type A (ACQ-C) in a water solution.
7. Propiconazole tebuconazole imidacloprid (PTI) in a water emulsion.

C. After dressing members, apply a copper naphthenate field-treatment preservative to comply with AWPA M4 to surfaces cut to a depth of more than 1/16 inch (1.5 mm).

2.5 TIMBER CONNECTORS

A. Per Structural Drawings

B. Materials: Unless otherwise indicated, fabricate from the following materials:

1. Structural-steel shapes, plates, and flat bars complying with ASTM A 36/A 36M.
2. Round steel bars complying with ASTM A 575, Grade M 1020.
3. Hot-rolled steel sheet complying with ASTM A 1011/A 1011M, Structural Steel, Type SS, Grade 33.
4. Stainless-steel plate and flat bars complying with ASTM A 666, **Type 316**.
5. Stainless-steel bars and shapes complying with ASTM A 276, **Type 316**.
6. Stainless-steel sheet complying with ASTM A 240/A 240M or ASTM A 666,**Type 316**.

C. Finish steel assemblies and fasteners with rust-inhibitive primer, 2-mil (0.05-mm) dry film thickness.

1. Primer shall comply with the testing and product requirements of the California Department of Public Health's (formerly, the California Department of Health Services') "Standard Method for the Testing and Evaluation of Volatile Organic Chemical Emissions from Indoor Sources Using Environmental Chambers."

D. Hot-dip galvanize steel assemblies and fasteners after fabrication to comply with ASTM A 123/A 123M or ASTM A 153/A 153M.

2.6 MISCELLANEOUS MATERIALS

A. End Sealer: Manufacturer's standard, transparent, colorless wood sealer that is effective in retarding the transmission of moisture at cross-grain cuts and is compatible with indicated finish.

B. Penetrating Sealer: Manufacturer's standard, transparent, penetrating wood sealer that is compatible with indicated finish.

C. Sealers shall comply with the testing and product requirements of the California Department of Public Health's (formerly, the California Department of Health Services') "Standard Method for the Testing and Evaluation of Volatile Organic Chemical Emissions from Indoor Sources Using Environmental Chambers."

2.7 FABRICATION

A. Shop fabricate for connections to greatest extent possible, including cutting to length and drilling bolt holes.

1. Dress exposed surfaces as needed to remove planing and surfacing marks.

B. Camber: Fabricate horizontal and inclined members of less than 1:1 slope with either circular or parabolic camber equal to 1/500 of span.

C. Where preservative-treated members are indicated, fabricate (cut, drill, surface, and sand) before treatment to greatest extent possible. Where fabrication must be done after treatment, apply a field-treatment preservative to comply with AWPA M4.

1. Use inorganic boron (SBX) treatment for members not in contact with the ground and continuously protected from liquid water.
2. Use copper naphthenate treatment for members in contact with the ground or not continuously protected from liquid water.

D. End-Cut Sealing: Immediately after end cutting each member to final length **and after preservative treatment**, apply a saturation coat of end sealer to ends and other cross-cut surfaces, keeping surfaces flood coated for not less than 10 minutes.

E. Seal Coat: After fabricating, sanding, and end-coat sealing, apply a heavy saturation coat of penetrating sealer on surfaces of each unit **except for preservative-treated wood where treatment included a water repellent**.

2.8 FACTORY FINISHING

A. Wiped Stain Finish: Manufacturer's standard, dry-appearance, penetrating acrylic stain and sealer; oven dried and resistant to mildew and fungus.

1. Color: **As selected by Architect from manufacturer's full range**.

B. Clear Finish: Manufacturer's standard, two-coat, clear varnish finish; resistant to mildew and fungus.

C. Finishing materials shall comply with the testing and product requirements of the California Department of Public Health's (formerly, the California Department of Health Services') "Standard Method for the Testing and Evaluation of Volatile Organic Chemical Emissions from Indoor Sources Using Environmental Chambers."

PART 3 - EXECUTION

3.1 EXAMINATION

A. Examine substrates in areas to receive structural glued-laminated timber, with Installer present, for compliance with requirements, installation tolerances, and other conditions affecting performance of the Work.

B. Proceed with installation only after unsatisfactory conditions have been corrected.

3.2 INSTALLATION

A. General: Erect structural glued-laminated timber true and plumb and with uniform, close-fitting joints. Provide temporary bracing to maintain lines and levels until permanent supporting members are in place.

1. Handle and temporarily support glued-laminated timber to prevent surface damage, compression, and other effects that might interfere with indicated finish.

B. Cutting: Avoid extra cutting after fabrication. Where field fitting is unavoidable, comply with requirements for shop fabrication.

C. Fit structural glued-laminated timber by cutting and restoring exposed surfaces to match specified surfacing **and finishing**.

1. Predrill for fasteners using timber connectors as templates.

2. Finish exposed surfaces to remove planing or surfacing marks and to provide a finish equivalent to that produced by machine sanding with No. 120 grit sandpaper.

3. Coat cross cuts with end sealer.
4. Where preservative-treated members must be cut during erection, apply a field-treatment preservative to comply with AWPA M4.

    a. Use inorganic boron (SBX) treatment for members not in contact with the ground and continuously protected from liquid water.
    b. Use copper naphthenate treatment for members in contact with the ground or not continuously protected from liquid water. D. Install timber connectors as indicated.

1. Unless otherwise indicated, install bolts with same orientation within each connection and in similar connections.
2. Install bolts with orientation as indicated or, if not indicated, as directed by Architect.

3.3 ADJUSTING

A. Repair damaged surfaces **and finishes** after completing erection. Replace damaged structural glued-laminated timber if repairs are not approved by Architect.

3.4 PROTECTION

A. Do not remove wrappings on individually wrapped members until they no longer serve a useful purpose, including protection from weather, sunlight, soiling, and damage from work of other trades.

1. Coordinate wrapping removal with finishing work. Retain wrapping where it can serve as a painting shield.
2. Slit underside of wrapping to prevent accumulation of moisture inside the wrapping.

END OF SECTION 06 18 00

SECTION 07 13 24 - PRE-APPLIED AND SELF ADHERING SHEET MEMBRANE WATERPROOFING

PART 1 — GENERAL 1.01 SUMMARY

A. The Work of this Section includes, but is not limited to, pre-applied sheet membrane waterproofing that forms an integral bond to poured concrete for the following applications:
   1. Vertical Applications: Membrane applied against soil retention system prior to placement of concrete foundation walls;
   2. Horizontal Applications: Membrane applied on prepared subbase prior to placement of concrete slabs.

B. Related sections include, but are not limited to, the following:
   1. Section 03 10 00 - Concrete Forming and Accessories
   2. Section 31 23 16 – Excavation
   3. Section 31 63 29 - Caissons
   4. Section 03 20 00 - Concrete Reinforcing
   5. Section 03 30 00 – Cast-In-Place Concrete

1.02 SUBMITTALS

A. Submit manufacturer's product data, installation instructions and membrane samples for approval.

1.03 REFERENCE STANDARDS

A. The following standards and publications are applicable to the extent referenced in the text.

B. American Society for Testing and Materials (ASTM):

C 836 Standard Specification for High Solids, Cold Liquid-Applied Elastomeric Waterproofing Membrane for Use with Separate Wearing Course

D 412 Standard Test Methods for Rubber Properties in Tension

D 570 Standard Test Method for Water Absorption of Plastics

D 903 Standard Test Method for Peel or Stripping Strength of Adhesive Bonds

D 1876 Standard Test Method for Peel Release of Adhesives (T-Peel)

D 1970 Standard Specification for Self-Adhering Polymer Modified Bituminous Sheet Materials Used as Steep Roofing Underlayment for Ice Dam Protection

D 3767 Standard Practice for Rubber - Measurements of Dimensions

D 5385 Standard Test Method for Hydrostatic Pressure Resistance of Waterproofing Membranes

E 96 Standard Test Methods for Water Vapor Transmission of Materials

E 154 Standard Test Methods for Water Vapor Retarders Used in Contact with Earth Under Concrete Slabs, on Walls, or as Ground Cover

1.04 QUALITY ASSURANCE

A. Manufacturer: Sheet membrane waterproofing system shall be manufactured and marketed by a firm with a minimum of 20 years experience in the production and sales of sheet membrane waterproofing. Manufacturers proposed for use but not named in these

specifications shall submit evidence of ability to meet all requirements specified, and include a list of projects of similar design and complexity completed within the past 5 years.

B. Installer: A firm which has at least 3 years experience in work of the type required by this section.

C. Materials: For each type of material required for the work of this section, provide primary materials which are the products of one manufacturer.

D. Pre-Installation Conference: A pre-installation conference shall be held prior to commencement of field operations to establish procedures to maintain optimum working conditions and to coordinate this work with related and adjacent work. Agenda for meeting shall include review of special details and flashing.

E. Schedule Coordination: Schedule work such that membrane will not be left exposed to weather for longer than that recommended by the manufacturer.

1.05 DELIVERY, STORAGE AND HANDLING

A. Deliver materials in labeled packages. Store and handle in strict compliance with manufacturer's instructions. Protect from damage from weather, excessive temperature and construction operations. Remove and dispose of damaged material in accordance with applicable regulations.

1.06 PROJECT CONDITIONS

A. Perform work only when existing and forecasted weather conditions are within the limits established by the manufacturer of the materials used. Proceed with installation only when the substrate construction and preparation work is complete and in condition to receive sheet membrane waterproofing.

1.07 WARRANTY

A. Sheet Membrane Waterproofing: Provide written five year material warranty issued by the membrane manufacturer upon completion of work.

PART 2 — PRODUCTS 2.01 MATERIALS

A. Pre-applied Integrally Bonded Sheet Waterproofing Membrane: Preprufe® 300R Membrane [or Preprufe 300LT Membrane for application temperatures between 25°F (-4°C) and 60°F (+16°C)] by Grace Construction Products, a 1.2mm (0.046 in) nominal thickness composite sheet membrane comprising 0.8 mm (0.030 in.) of high density polyethylene film, and layers of specially formulated synthetic adhesive layers. The membrane shall form an integral and permanent bond to poured concrete to prevent water migration at the interface of the membrane and structural concrete. Provide membrane with the following physical properties:

PHYSICAL PROPERTIES FOR PREPRUFE 300R (or 300LT) MEMBRANE:

Property	Test Method	Typical Value
Color		White
Thickness	ASTM D 3767 Method A	1.2 mm (0.046 in.) nominal
Lateral Water Migration Resistance	ASTM D 5385 Modified[1]	Pass at 71 m (231 ft) of hydrostatic head pressure
Low Temperature Flexibility	ASTM D 1970	Unaffected at -29°C (-20°F)
Elongation	ASTM D 412 Modified[2]	500%
Crack Cycling at -23°C (-9.4°F), 100 Cycles	ASTM C 836	Unaffected, Pass
Tensile Strength, film	ASTM D 412	27.6 MPa (4,000 lbs/in.^{2})
Peel Adhesion to Concrete	ASTM D 903 Modified[3]	880 N/m (5.0 lbs/in.)
Lap Adhesion	ASTM D 1876 Modified[4]	880 N/m (5.0 lbs/in.)
Resistance to Hydrostatic Head	ASTM D 5385 Modified[5]	71 m (231 ft)
Puncture Resistance	ASTM E 154	990 N (221 lbs)
Permeance	ASTM E 96 Method B	0.6 ng/Pa x s x m^2 (0.01 perms)
Water Absorption	ASTM D 570	0.5%

Footnotes:

1. *Lateral water migration resistance is tested by casting concrete against membrane with a hole and subjecting the membrane to hydrostatic head pressure with water. The test measures the resistance of lateral water migration between the concrete and the blind side waterproofing membrane. A hydrostatic head pressure of 71 m (231 ft) of water is the limit of the apparatus.*
2. *Elongation of membrane is run at a rate of 50 mm (2 in.) per minute.*
3. *Concrete is cast against the protective coating surface of the membrane and allowed to cure (7 days minimum). Peel adhesion of membrane to concrete is measured at a rate of 50 mm (2 in.) per minute at room temperature.*
4. *The test is conducted 15 minutes after the lap is formed as per manufacturer's instructions and run at a rate of 50 mm (2 in.) per minute.*
5. *Hydrostatic head tests are performed by casting concrete against the membrane with a lap. Before the concrete sets a 3 mm (0.125 in.) spacer is inserted perpendicular to the membrane to create a gap. The cured block is placed in a chamber where water is introduced to the membrane surface up to a head of 71 m (231 ft) of water which is the limit of the apparatus.*

B. Pre-applied Integrally Bonded Sheet Waterproofing Membrane: Preprufe® 160R Membrane [or Preprufe 160LT Membrane for application temperatures between 25°F (-4°C) and 60°F (+16°C)] by Grace Construction Products, a 1.0mm (0.032 in) nominal thickness composite sheet membrane comprising 0.4 mm (0.016 in.) of high density polyethylene film, and layers of specially formulated synthetic adhesive layers. The membrane shall form an integral and permanent bond to poured concrete to prevent water migration at the interface of the membrane and structural concrete. Provide membrane with the following physical properties:

PHYSICAL PROPERTIES FOR PREPRUFE 160R (or 160LT) MEMBRANE:

Property	Test Method	Typical Value
Color		White
Thickness	ASTM D 3767 Method A	1.0 mm (0.032 in.) nominal
Lateral Water Migration Resistance	ASTM D5385, Modified[1]	Pass at 71 m (231 ft) of hydrostatic head pressure
Low Temperature Flexibility	ASTM D 1970	Unaffected at -29°C (-20°F)
Elongation	ASTM D 412 Modified[2]	500%
Crack Cycling at -23°C (-9.4°F), 100 Cycles	ASTM C 836	Unaffected, Pass
Tensile Strength, film	ASTM D 412	27.6 MPa (4,000 lbs/in.^{2})
Peel Adhesion to Concrete	ASTM D 903 Modified[3]	880 N/m (5.0 lbs/in.)
Lap Adhesion	ASTM D 1876 Modified[4]	880 N/m (5.0 lbs/in.)
Resistance to Hydrostatic Head	ASTM D 5385 Modified[5]	Pass at 71 m (231 ft)
Puncture Resistance	ASTM E 154	445 N (100 lbs)
Permeance	ASTM E 96 Method B	0.6 ng/Pa x s x m^2 (0.01 perms)
Water Absorption	ASTM D 570	0.5%

Footnotes:

1. *Lateral water migration resistance is tested by casting concrete against membrane with a hole and subjecting the membrane to hydrostatic head pressure with water. The test measures the resistance of lateral water migration between the concrete and the blind side waterproofing membrane. A hydrostatic head pressure of 71 m (231 ft) of water is the limit of the apparatus.*
2. *Elongation of membrane is run at a rate of 50 mm (2 in.) per minute.*
3. *Concrete is cast against the protective coating surface of the membrane and allowed to cure (7 days minimum). Peel adhesion of membrane to concrete is measured at a rate of 50 mm (2 in.) per minute at room temperature.*
4. *The test is conducted 15 minutes after the lap is formed as per manufacturer's instructions and run at a rate of 50 mm (2 in.) per minute.*
5. *Hydrostatic head tests are performed by casting concrete against the membrane with a lap. Before the concrete sets a 3 mm (0.125 in.) spacer is inserted perpendicular to the membrane to create a gap. The cured block is placed in a chamber where water is introduced to the membrane surface up to a head of 71 m (231 ft) of water which is the limit of the apparatus.*

C. Waterstop: Adcor™ ES hydrophilic non-bentonite waterstop by Grace Construction Products for non-moving concrete construction joints.

PHYSICAL PROPERTIES FOR GRACE ADCOR™ ES HYDROPHYLIC WATERSTOP:

Property	Typical Value
Color	Green

Size	1.0 in. x ½ in. x 16 ft. rolls (25.4 mm x 12.7 mm x 4.9 m)
Hydrostatic Head Resistance	70 m (231 ft)
Wet - Dry Cycling [25 Cycles @ 231 ft. (70 m)]	No Effect
Adhesion to Concrete using Adcor ES Adhesive	Excellent

D. Preformed Soil Retention Wall Tieback Cover: Preprufe Tieback Cover by Grace Construction Products as a prefabricated detail for soil retention wall tiebacks.

E. Preformed Inside and Outside Corners: Preprufe Preformed Corners by Grace Construction Products as prefabricated inside and outside corners.

F. Tape for covering cut edges, roll ends, penetrations and detailing: Preprufe Tape LT (for temperatures between 25°F (-4°C) and 86°F (+30°C)) and Preprufe Tape HC (for use in Hot Climates, minimum 50°F (10°C))

G. Miscellaneous Materials: accessories specified or acceptable to manufacturer of pre-applied waterproofing membrane.

H. Sheet Membrane Waterproofing System: Bituthene® System 4000 Membrane by Grace Construction Products; a self-adhesive, cold-applied composite sheet consisting of a thickness of 1.4 mm (0.056 in.) of rubberized asphalt and 0.1 mm (0.004 in.) of crosslaminated, high density polyethylene film specially formulated for use with water-based surface conditioner. Provide rubberized asphalt membrane covered with a release sheet which is removed during installation. No special adhesive or heat shall be required to form laps.

I. Sheet Membrane Waterproofing

PHYSICAL PROPERTIES FOR BITUTHENE SYSTEM 4000 MEMBRANE:

Property	Test Method	Typical Value
Color		Dark gray-black
Thickness	ASTM D 3767 Method A	1.5 mm (0.060 in.) nominal
Flexibility, 180° bend over 25 mm (1 in.) mandrel at -43°C (-45°F)	ASTM D 1970	Unaffected
Tensile Strength, Membrane Die C	ASTM D 412 Modified[1]	2240 kPa (325 lbs/in.^{2}) minimum
Tensile Strength, Film	ASTM D 882 Modified[1]	34.5 MPa (5,000 lbs/in.^{2}) minimum
Elongation, Ultimate Failure of Rubberized Asphalt	ASTM D 412 Modified[1]	300% minimum
Crack Cycling at -32°C (25°F), 100 Cycles	ASTM C 836	Unaffected
Lap Adhesion at Minimum Application Temperature	ASTM D 1876 Modified[2]	880 N/m (5 lbs/in.)
Peel Strength	ASTM D 903 Modified[3]	1576 N/m (9 lbs/in.)
Puncture Resistance, Membrane	ASTM E 154	222 N (50 lbs) minimum

Resistance to Hydrostatic Head	ASTM D 5385	70 m (231 ft) of water
Permeance	ASTM E 96, Section 12 – Water Method	2.9 ng/m^{2}sPa (0.05 perms) maximum
Water Absorption	ASTM D 570	0.1% maximum

Footnotes:
1. *The test is run at a rate of 50 mm (2 in.) per minute.*
2. *The test is conducted 15 minutes after the lap is formed and run at a rate of 50 mm (2 in.) per minute at -4°C (25°F).*
3. *The 180° peel strength is run at a rate of 300 mm (12 in.) per minute.*

J. Prefabricated Drainage Composite:) Drainage Composite by Grace Construction Products. Drainage Composite shall be designed to promote positive drainage while serving as a protection course. Use Hydroduct® 220 for all vertical applications and Hydroduct® 660 for all horizontal applications K. Protection Board:

1. Expanded Polystyrene Protection Board: 25 mm (1 in.) thick for vertical applications with the following characteristics. Adhere to waterproofing membrane with Bituthene Protection Board Adhesive.

   Normal Density: 16 kg/m^3 (1.0 lb/ft^3)

   Thermal Conductivity, K factor: 0.24 at 5°C (40°F), 0.26 at 24°C (75°F) Thermal

   Resistance, R-Value: 4 per 25 mm (1 in.) of thickness.
2. Asphalt Hardboard: A premolded semi-rigid protection board consisting of bitumen, mineral core and reinforcement. Provide 3 mm (0.125 in.) thick hardboard on horizontal surfaces not receiving steel reinforced slab. Where steel reinforcing bars are to be used, apply two layers of 3 mm (0.125 in.) thick hardboard or one layer of 6 mm (0.25 in.) thick hardboard.

L. Waterstop: Adcor™ ES hydrophilic non-bentonite waterstop by Grace Construction Products for non-moving concrete construction joints.

M. Miscellaneous Materials: Surface conditioner, mastic, liquid membrane, tape and accessories specified or acceptable to manufacturer of sheet membrane waterproofing.

PART 3 — EXECUTION 3.01 EXECUTION

A. The installer shall examine conditions of substrates and other conditions under which this work is to be performed and notify the Contractor, in writing, of circumstances detrimental to the proper completion of the work. Do not proceed with work until unsatisfactory conditions are corrected.

3.02 SUBSTRATE PREPARATION

A. It is essential to create a sound and solid substrate to eliminate movement during the concrete pour. Substrates must be regular and smooth with no gaps or voids greater than 0.5 in. (12 mm). Grout around all penetrations such as utility conduits, etc. for stability.

1. Horizontal Surfaces - The substrate must be free of loose aggregate and sharp protrusions. Avoid curved or rounded substrates. When installing over earth or crushed stone, ensure substrate is well compacted to avoid displacement of substrate due to

traffic or concrete pour. The surface does not need to be dry, but standing water must be removed.

2. Vertical Surfaces - Use concrete, plywood, insulation or other approved facing to sheet piling to provide support to the membrane. Board systems such as timber lagging must be close butted to provide support and not more than 0.5 in. (12 mm) out of alignment.

3.03 INSTALLATION, HORIZONTAL APPLICATIONS

A. Strictly comply with installation instructions in manufacturer's published literature, including but not limited to, the following:

1. Place the membrane HDPE film side to the substrate with the clear plastic release liner facing towards the concrete pour. End laps should be staggered to avoid a build-up of layers.
2. Leave the plastic release liner in position until overlap procedure is completed.
3. Accurately position succeeding sheets to overlap the previous sheet 3 in. (75 mm) along the marked selvedge. Ensure the underside of the succeeding sheet is clean, dry and free from contamination before attempting to overlap.
4. Peel back the plastic release liner from between the overlaps as the two layers are bonded together. Ensure a continuous bond is achieved without creases and roll firmly with a heavy roller.
5. Completely remove the plastic liner to expose the protective coating. Any initial tack will quickly disappear.

3.04 INSTALLATION, VERTICAL APPLICATIONS

A. Strictly comply with installation instructions in manufacturer's published literature, including but not limited to, the following:

1. Mechanically fasten the membrane vertically using fasteners appropriate to the substrate with the clear plastic release liner facing towards the concrete pour. The membrane may be installed in any convenient length.
2. Fastening through the selvedge using a small and low profile head fastener so that the membrane lays flat and allows firmly rolled overlaps.
3. Immediately remove the plastic release liner.
4. Ensure the underside of the succeeding sheet is clean, dry and free from contamination before attempting to overlap.
5. Roll firmly to ensure a watertight seal.
6. Overlap all roll ends and cut edges by a minimum 3 in. (75 mm) and ensure the area is clean and free from contamination, wiping with a damp cloth if necessary.
7. Allow to dry and apply Preprufe Tape LT (or HC in hot climates) centered over the lap edges and roll firmly.
8. Immediately remove printed plastic release liner from the tape.

3.05 WATERSTOP INSTALLATION

A. Strictly comply with installation instructions in manufacturer's published literature, including but not limited to, the following:

1. Secure Adcor ES using masonry nails 1½ in. - 2 in. (40 mm – 50 mm) long with a washer ¾ in. (20 mm) in diameter. Hilti EM6-20-12 FP8 shot fired fixings with ¼ in. (6 mm) nuts and ¾ in. (20 mm) diameter washers may also be used. Fixings should be spaced at a maximum of 12 in. (300 mm) centers with a minimum spacing that ensures proper contact to substrate.
2. On irregular concrete faces, or on vertical surfaces, apply a ½ in. (12 mm) bead of Adcor ES Adhesive as bedding for Adcor ES.
3. Adcor ES joints should overlap a minimum of 4 in. (100 mm), ensuring full contact between jointed pieces.

3.06 PROTECTION

A. Protect membrane in accordance with manufacturer's recommendations until placement of concrete. Inspect for damage just prior to placement of concrete and make repairs in accordance with manufacturer's recommendations.

END OF SECTION

SECTION 07 25 00 - WEATHER BARRIERS

PART 1 GENERAL 1.01 SECTION INCLUDES

A. Air Barriers: Materials that form a system to stop passage of air through exterior walls and joints around frames of openings in exterior walls.

1.02 RELATED REQUIREMENTS

A. Section 07 46 23 - Wood Siding: Exterior rain screen outside of water resistive air barrier.

B. Section 07 54 00 - Thermoplastic Membrane Roofing: Vapor retarder installed as part of roofing system.

C. Section 07 90 05 - Joint Sealers: Sealant materials and installation techniques.

1.03 DEFINITIONS

A. Weather Barrier: Assemblies that form either water-resistive barriers, air barriers, or vapor retarders.

B. Air Barrier: Air tight barrier made of material that is relatively air impermeable but water vapor permeable, both to the degree specified, with sealed seams and with sealed joints to adjacent surfaces. Note: For the purposes of this specification, vapor impermeable air barriers are classified as vapor retarders.

1.04 REFERENCE STANDARDS

A. ASTM D412 - Standard Test Methods for Vulcanized Rubber and Thermoplastic Elastomers--Tension; 2006a (Reapproved 2013).

B. ASTM D1970/D1970M - Standard Specification for Self-Adhering Polymer Modified Bituminous Sheet Materials Used as Steep Roofing Underlayment for Ice Dam Protection; 2013.

C. ASTM E84 - Standard Test Method for Surface Burning Characteristics of Building Materials; 2014.

D. ASTM E96/E96M - Standard Test Methods for Water Vapor Transmission of Materials; 2014.

E. ASTM E2178 - Standard Test Method for Air Permeance of Building Materials; 2013.

F. ICC-ES AC212 - Acceptance Criteria for Water-Resistive Coatings Used as Water-Resistive Barriers over Exterior Sheathing; ICC Evaluation Service, Inc.; 2012.

1.05 SUBMITTALS

A. See Section 01 30 00 - Administrative Requirements, for submittal procedures.

B. Product Data: Provide data on material characteristics, performance criteria, and limitations.
   1. When feasible all air barriers membranes and accessories such as transition membranes, flashing membranes, mastics, sealants, primers and tapes) shall be furnished by the same manufacturer. When products from a variety of manufacturers are used, a letter must be obtained from at least one manufacturer of the products in contact stating the materials proposed for use are permanently chemically compatible and adhesively compatible with adjacent materials proposed for use.

C. Shop Drawings: Provide drawings of special joint conditions. D. Manufacturer's Installation Instructions: Indicate preparation.

1.06 FIELD CONDITIONS

A. Maintain temperature and humidity recommended by the materials manufacturers before, during and after installation.

PART 2 PRODUCTS 2.01 WEATHER BARRIER ASSEMBLIES

A. Air Barrier: Behind exterior wood siding:
   1. On outside surface of single wythe concrete exterior walls use air barrier coating.

2.02 AIR BARRIER MATERIALS (WATER VAPOR PERMEABLE AND WATER-RESISTIVE)

A. Air Barrier, Fluid Applied: Vapor permeable, elastomeric waterproofing. B.

Air Barrier Coating:

1. Material: Water-based acrylic or polymer-modified bitumen, with VOC content of zero.
2. Acceptable Substrates: Stated by manufacturer as suitable for installation on visibly damp surfaces and concrete that has hardened but is not fully cured ("green" concrete) without requiring a primer.
3. Dry Film Thickness (DFT): 10 mils (0.010 inch), minimum.
4. Air Permeance: 0.004 cubic feet per minute per square foot, maximum, when tested in accordance with ASTM E2178.
5. Water Vapor Permeance: 10 perms, minimum, when tested in accordance with ASTM E96/E96M.
6. Dry Film Thickness: 40 mils (0.040 inch), minimum.
7. Air Permeance: 0.004 cubic feet per square foot, maximum, when tested in accordance with ASTM E2178.
8. Water Vapor Permeance: 12 perms, minimum, when tested in accordance with ASTM E96/E96M.
9. Elongation: 300 percent, minimum, when tested in accordance with ASTM D412.
10. Surface Burning Characteristics: Flame spread index of 25 or less, smoke developed index of 450 or less, when tested in accordance with ASTM E84.
11. Nail Sealability: Pass, when tested in accordance with ASTM D1970/D1970M.
12. VOC Content: 25 g per L or less.
13. Code Acceptance: Comply with applicable requirements of ICC-ES Acceptance Criteria AC212.
14. Sealants, Tapes and Accessories: As recommended by coating manufacturer.
15. Products:
    a. BASF Corporation; ENERSHIELD-HP: www.enershield.basf.com.
    b. DuPont Building Innovations; Tyvek Fluid Applied WB with Tyvek Fluid Applied Flashing and Joint Compound, Sealant for Tyvek Fluid Applied System and StraightFlash: www.dupont.com.
    c. Henry Company; Air-Bloc 31: www.henry.com. Basis of Design.
    d. Hohmann and Barnard, Inc.; Textroflash Liquid VP: www.h-b.com.
    e. Mar-flex Waterproofing & Building Products; Air Barrier 1200VP: www.mar-flex.com.
    f. W.R. Meadows, Inc.; Air-Shield LMP: www.wrmeadows.com.
    g. Substitutions: See Section 01 60 00 - Product Requirements.

2.03 SEALANTS

A. Silicone Sealant: Type 1 as specified in Section 07 90 05.

B. Sealant Backers: As specified in Section 07 90 05.

C. Primers, Cleaners, and Other Sealant Materials: As recommended by sealant manufacturer, appropriate to application, and compatible with adjacent materials.

2.04 ACCESSORIES

A. Sealants, Tapes, and Accessories for Sealing Weather Barrier and Sealing Weather Barrier to Adjacent Substrates: As specified or as recommended by weather barrier manufacturer. B. Self-Adhesive Sheet Flashing: ASTM D 1970.

C. Thinners and Cleaners: As recommended by material manufacturer.

PART 3 EXECUTION 3.01 EXAMINATION

A. Verify that surfaces and conditions are ready to accept the work of this section.

3.02 PREPARATION

A. Remove projections, protruding fasteners, and loose or foreign matter that might interfere with proper installation..Ensure gaps are filled, joints struck, CMU is dry, and all snags are gone.

B. Clean and prime substrate surfaces to receive adhesives in accordance with manufacturer's instructions.

3.03 INSTALLATION

A. Install materials in accordance with manufacturer's instructions.

B. Air Barriers: Install continuous air tight barrier over surfaces indicated, with sealed seams and with sealed joints to adjacent surfaces.

C. Apply sealants and adhesives within recommended application temperature ranges. Consult manufacturer if temperature is out of this range. D. Coatings:

1. Prepare substrate in manner recommended by coating manufacturer; treat joints in substrate and between dissimilar materials as recommended by manufacturer.
2. At Transition between foundations and walls: Through wall flashing must be draped from above to completely cover this joint and adhered to the face of the foundation wall
3. Coating shall continuously cover end or edge of concrete floor and roof plank.
4. Verify proper thickness using a wet mill gauge. Substrate shall not be visible.
5. Use flashing to seal to adjacent construction and to bridge joints.
6. Transition membranes shall be installed and sealed before insulation is installed on top. Seams shall be sealed with mastic type liquid membrane or with compatible sealant.
7. For liquid applied membrane at adjacent building conditions in any locations where continuous air barrier on the exterior of the building cannot be installed, a low VOC product shall be installed on the interior at full height (top of plank to bottom of plank at each floor). This shall happen before any interior framing is installed.
8. Transition membranes shall be installed and sealed before insulation is installed on top. Seams shall be sealed with mastic type liquid membrane or with compatible sealant.

E. Openings and Penetrations in Exterior Weather Barriers:

1. Install flashing over entire rough opening, covering entire sill frame member, extending at least 5 inches onto weather barrier and at least 6 inches up jambs; mechanically fasten stretched edges.
2. At openings to be filled with frames having nailing flanges, seal head and jamb flanges using a continuous bead of sealant compressed by flange and cover flanges with at least 4 inches wide; do not seal sill flange.
3. At openings to be filled with non-flanged frames, seal weather barrier to all sides of opening framing, using flashing at least 9 inches wide, covering entire depth of framing.
4. At head of openings, install flashing under weather barrier extending at least 2 inches beyond face of jambs; seal weather barrier to flashing.
5. At interior face of openings, seal gap between window/door frame and rough framing, using joint sealant over backer rod.
6. Service and Other Penetrations: Form flashing around penetrating item and seal to weather barrier surface with sealants compatible with all surfaces. Transition membranes shall be used to patch as necessary with seams sealed appropriately. Gaps shall be filled with backer rod as necessary and sealant compatible with all surfaces. Where smooth surfaces are present, mechanical gasket seals can be used.

F. Construction Joints: Sealing materials spanning joints between construction materials shall allow for expansion and contraction of the construction materials.

3.04 FIELD QUALITY CONTROL

A. Do not cover installed weather barriers until required inspections have been completed.

B. Obtain approval of installation procedures by the weather barrier manufacturer based on a mock-up installed in place, prior to proceeding with remainder of installation.

C. Take digital photographs of each portion of the installation prior to covering up.

3.05 PROTECTION

A. Do not leave materials exposed to weather longer than recommended by manufacturer. **END OF SECTION**

SECTION 07 41 13 - METAL ROOF PANELS

PART 1 - GENERAL

1.1 SUMMARY

A. Section Includes: Architectural metal roof panels, including trim accessories.
B. Related Sections: Section(s) related to this section include:

1. Section 06 15 00 – Wood Decking: Solid substrate for Metal Roof Panels.

1.2 REFERENCES

A. General: Standards listed by reference form a part of this specification section. Standards listed are identified by issuing authority, abbreviation, designation number, title or other designation. Standards subsequently referenced in this Section are referred to by issuing authority abbreviation and standard designation.

B. ASTM International:

1. ASTM A 792 - Standard Specification for Steel Sheet, 55% Aluminum-Zinc AlloyCoated by the Hot-Dip Process.
2. ASTM D 2244 - Standard Practice for Calculation of Color Tolerances and Color Differences from Instrumentally Measured Color Coordinates.
3. ASTM D 4214 - Standard Test Methods for Evaluating the Degree of Chalking of Exterior Paint Films.

C. Underwriters Laboratories (UL):

1. UL 263 - Fire Tests of Building Construction and Materials.
2. UL 580 - Tests For Uplift Resistance of Roof Assemblies.
3. UL 790 - Standard Test Methods for Fire Tests of Roof Coverings.
4. UL 2218 - Impact Resistance of Prepared Roof Covering Materials.

D. Sheet Metal and Air Conditioning Contractors' National Association (SMACNA): "Architectural Sheet Metal Manual."

1.3 ADMINISTRATIVE REQUIREMENTS

A. Preinstallation Meetings: Conduct preinstallation meeting to clarify Project requirements, substrate conditions, manufacturer’s installation instructions and manufacturer’s warranty requirements.

1.4 ACTION SUBMITTALS

A. Product Technical Data: For each type of product required, including manufacturer's preparation recommendations, storage and handling requirements, and recommended installation methods.

B. Shop Drawings: Showing methods of installation, plans, sections, elevations and details of roof and wall panels, specified loads, flashings, roof curbs, vents, sealants, interfaces with all materials not supplied by the metal panel system manufacturer, and identification of proposed component parts and their finishes. Do not proceed with fabrication prior to approval of shop drawings.

C. Samples: Selection and verification samples for finishes, colors and textures. Submit two complete sample sets of each type of panel, trim, clip and fastener required.

D. Certificates: Product certificates signed by manufacturer certifying materials comply with specified performance characteristics, criteria and physical requirements.

E. Test and Evaluation Reports: Showing compliance with specified performance characteristics and physical properties.

F. Qualifications Statements: For manufacturer and installer.

H. Design Submittal: Comply with performance requirements and design criteria, including analysis data and calculations signed and sealed by a qualified professional engineer.

1.5 CLOSEOUT SUBMITTALS

A. Operation and Maintenance Data: For installed products including maintenance methods and precautions against cleaning materials and methods detrimental to finishes and performance.

B. Warranty: Warranty documents required in this section.

1.6 MAINTENANCE MATERIAL

A. Extra Materials: Deliver to Owner extra materials from same production run as products installed. Package products with protective covering and identify with descriptive labels. Comply with Division 01 Closeout Submittals Section.

1. Quantity: Furnish quantity of metal roof panel units equal to 10 percent of amount installed.
2. Delivery, Storage and Protection: Comply with Owner’s requirements for delivery, storage and protection of extra materials.

1.7 QUALITY ASSURANCE

A. Manufacturer Qualifications:

1. Provider of advanced installer training.
2. Minimum of ten years experience in manufacturing metal roof systems.
3. Provider of products produced in a permanent factory environment with fixed rollforming equipment.

B. Installer Qualifications:

1. At least five years experience in the installation of architectural metal roof panels.
2. Experience on at least five projects of similar size, type and complexity as this Project that have been in service for a minimum of two years with satisfactory performance of the roof system.
3. Employer of workers for this Project who are competent in techniques required by manufacturer for installation indicated and who shall be supervised at all times when material is being installed.

C. Mock-Ups: Install at Project site a mock-up using required products and manufacturer's approved installation methods. Obtain Owner and Architect approval of finish, color, texture, pattern, trim, fasteners and quality of installation before proceeding with further work.

1. Size: Three panels wide x full lengths of panels.
2. Maintenance: Maintain mock-up during construction for quality comparison. Remove and lawfully dispose of mock-up construction when no longer required.
3. Incorporation: Mock-up may be incorporated into final construction upon Owner approval.

D. Preinstallation Conference: Conduct a pre-installation conference

E. Fire Resistance Ratings: Determined by testing identical products and assemblies according to UL 263 and UL 790 by a testing agency acceptable to authorities having jurisdiction.

1. Flame-Spread Index: 25 (Class A) or less.
2. Smoke-Developed Index: [**450**] or less.

1.8 DELIVERY, STORAGE AND HANDLING

A. General: Comply with manufacturer’s current printed product storage recommendations.

B. Delivery: Deliver materials in manufacturer’s original, unopened, undamaged containers with identification labels intact.

C. Storage: Store materials above ground, under waterproof covering, protected from exposure to harmful weather conditions and at temperature and humidity conditions recommended by manufacturer. Provide proper ventilation of metal panel system to prevent condensation build-up between each panel and trim or flashing component. Tilt stack to drain in wet conditions. Remove strippable plastic film before storage under high-heat conditions. Store products in manufacturer's unopened packaging until just prior to installation.

D. Handling: Exercise caution in unloading and handling metal panel system to prevent bending, warping, twisting and surface damage.

1.9 WARRANTY

A. Special Exposed Panel Finish Warranty: Manufacturer's standard form PVDF (Fluorocarbon) System Warranty for film integrity, chalk rating and fade rating in which manufacturer agrees to repair or replace panels that show evidence of deterioration within specified warranty period.

1. Deterioration shall include but is not limited to:

a. Color fading of more than 5 Hunter units when tested according to ASTM D 2244.
b. Chalking in excess of a No. 8 rating when tested according to ASTM D 4214.
c. Cracking, checking, peeling or failure of paint to adhere to bare metal.

2. Warranty Period: Film integrity for 45 years and chalk and fade rating for 35 years from date of Substantial Completion.
3. Manufacturer's warranty may exclude surface deterioration due to physical damage and exposure to salt air environments.

B. Special Exposed Panel Finish Warranty: Manufacturer's standard form proprietary two coat roll coated System Warranty for film integrity, chalk rating and fade rating in which manufacturer agrees to repair or replace panels that show evidence of deterioration within specified warranty period.

1. Deterioration shall include but is not limited to:

a. Color fading of more than 5 Hunter units on vertical applications or more than 6 Hunter units on non-vertical applications when tested according to ASTM D 2244.
b. Chalking in excess of a No. 8 rating on vertical applications or a No. 7 rating on non-vertical applications when tested according to ASTM D 4214.
c. Cracking, checking, peeling or failure of paint to adhere to bare metal. d. Perforation.

2. Warranty Period: Film integrity for 45 years, chalk and fade rating for 30 years, and perforation for 25 years from date of Substantial Completion.
3. Manufacturer's warranty may exclude surface deterioration due to physical damage and exposure to salt air environments.

C. Special Warranty: Installer's standard form in which installer agrees to repair or replace standing seam panels that fail due to poor workmanship or faulty installation within the specified warranty period.

1. Warranty Period: Ten years from date of Substantial Completion.

PART 2 – PRODUCTS

2.1 ARCHITECTURAL METAL ROOF PANELS

A. Basis of Design Product: Subject to compliance with requirements provide Metal Sales Manufacturing Corporation; 1" Mini-Batten.

B. Substitutions: See Section 01 60 00 – Product Requirements.

C. Product Options:

1. Panel Coverage: 18 inches (457.2 mm).
2. Rib Height: 1-1/2 inch (25.4 mm).

3. Material: Aluminum-zinc alloy-coated steel sheet, ASTM A 792, AZ50 coating designation, structural quality, Grade 50, 0.0236-inch (0.60-mm) minimum thickness.
4. Minimum Roof Slope Capability: 1/2:12.
5. Side Lap: Snap seamed.
6. Attachment: Concealed clip designed for thermal movement.
7. Application: Designed for application over solid substrate.
8. Surface Finish: PVDF (Kynar 500 or Hylar 5000).
9. Color: As selected by Architect from manufacturer's standard colors .
10. Fire Resistance Rating: Comply with UL 263 and UL 790 Class A Fire Resistance Ratings.
11. Impact Resistance: Comply with UL 2218 Class 4.
12. Wind Uplift Resistance: Comply with UL 580, Class 90 Wind Uplift, Construction #352.

D. Performance Criteria:.
1. Wind Uplift Resistance: Class 90
2. Structural Performance: Wind loads: 98 mph, snow load 22 psf, allowable deflection 1/180.
3. ENERGY STAR Performance: For low slope applications.

2.2 UNDERLAYMENT MATERIALS

A. General: Self-adhering rubberized asphalt sheet, self-sealing at screw penetrations.

B. Products: Grace Ice & Water Shield:
www.grace.com/construction/en-us/roofing-underlayments

2.5 ACCESSORIES

A. General: Panel clips, 0.027 inch thick, G90 galvanized, spaced as determined by design loads, and manufacturer’s #10-12 pan head wood screws for clips and concealed end fasteners.

B. Products:

1. Basis of Design Product: Subject to compliance with requirements provide Metal Sales Manufacturing Corporation accessories.
2. Color: As selected by Architect from manufacturer's full product range.

2.6 SOURCE QUALITY CONTROL

A. Source: Obtain architectural metal roof panels, trim and other accessories from a single manufacturer.

B. Quality Control: Obtain architectural metal roof panels, trim and other accessories from a manufacturer capable of providing on-site technical support and installation assistance.

PART 3 - EXECUTION

3.1 INSTALLERS

A. Submit for approval.

3.2 PREPARATION

A. Miscellaneous Framing: Install furring, eave angles, subpurlins, and other miscellaneous roof panel support members and anchorage according to metal roof panel manufacturer's recommendations.

3.3 UNDERLAYMENT INSTALLATION

A. Self-Adhering Sheet Underlayment: Install in accordance with manufacturer’s instructions.

B. Apply slip sheet over underlayment prior to installing metal roof panels.

3.5 ARCHITECTURAL METAL ROOF PANEL INSTALLATION

A. General: Comply with panel manufacturer’s installation instructions including but not limited to special techniques, interface with other work, and integration of systems.

B. Fasten metal roof panels to supports with concealed clips at each standing-seam joint at location, spacing, and using proper fasteners as recommended by panel manufacturer.

3.6 ACCESSORY INSTALLATION

A. General: Install accessories using techniques recommended by manufacturer and which will assure positive anchorage to building and weather tight mounting. Provide for thermal movement. Coordinate installation with flashings and other components.

B. Flashing and Trim: Comply with performance requirements, manufacturer's written installation instructions, and the SMACNA "Architectural Sheet Metal Manual." Provide concealed fasteners where possible, and install units to true level. Install work with laps, joints, and seams that will be permanently watertight.

3.7 FIELD QUALITY CONTROL

A. Manufacturer’s Field Services: If requested by Owner, provide manufacturer’s field service consisting of product use recommendations and periodic site visits for inspection of product installation in accordance with manufacturer’s instructions.

1. Site Visits: Provide at beginning, and completion of each roof.

3.8 CLEANING

A. Remove temporary coverings and protection of adjacent work areas.

B. Repair or replace any installed products that have been damaged.

C. Clean installed panels in accordance with manufacturer's instructions prior to Owner's acceptance.

D. Remove and lawfully dispose of construction debris from Project site.

3.9 PROTECTION

A. Protect installed product and finish surfaces from damage during construction.

END OF SECTION 07 41 13 - METAL ROOF PANELS

SECTION 07 46 23 - WOOD SIDING

PART 1 GENERAL 1.01 SECTION INCLUDES

A. Vertical Board siding for Walls.

B. Trim, flashings, accessories, and fastenings.

1.02 RELATED REQUIREMENTS

A. Section 07 25 00 - Weather Barriers: Weather barrier under siding.

B. Section 07 62 00 - Sheet Metal Flashing and Trim: Product requirements for metal flashings and trim associated with wood siding for placement by this section.

C. Section 07 92 00 - Joint Sealants: Sealing joints between siding and adjacent construction and fixtures.

D. Section 09 91 13 - Exterior Painting: Prime and finish painting.

1.03 REFERENCE STANDARDS

A. WCLIB (GR) - Standard Grading Rules for West Coast Lumber No. 17; West Coast Lumber Inspection Bureau; 2004, and supplements.

1.04 SUBMITTALS

A. See Section 01 30 00 - Administrative Requirements, for submittal procedures.

B. Product Data: Provide data indicating materials, component profiles, fastening methods, jointing details, sizes, surface texture, finishes, and accessories.

C. Samples: Submit two samples 12 x 12 inch in size illustrating surface texture.

1.05 QUALITY ASSURANCE

A. Grade lumber in accordance with the following:
   1. Western Red Cedar: WCLIB (GR).

1.06 DELIVERY, STORAGE, AND HANDLING

A. Store in ventilated areas with constant minimum temperature of 60 degrees F and maximum relative humidity of 55 percent.

PART 2 PRODUCTS 2.01 SUPPLIERS

A. General Woodcraft Inc, 860.444.9663; Climate-Shield Standard Rain Screen Vertical Siding; www.mataverdedecking.com. Basis of Design.

B. IpeDepot, 877.232.3915; Product Ipe Shiplap Siding: ipedepot.com.

C. Substitutions: See Section 01 60 00 - Product Requirements.

2.02 SIDING

A. Board Siding: Flat, Ipe, clear grade, maximum moisture content of 10 percent.
   1. Size: 5/4 inch thick x 6 inch wide, nominal, 1 x 5-1/2 inch actual board size.
   2. Profile: Ship lap
   3. Surface Texture: Sanded.

B. Rain Screen Clip: CS-2 Climate-Shield Aluminum clip to support and space vertical siding.

C. Starter Rail: Special profile aluminum angle fastened siding to support siding boards.

2.03 ACCESSORIES

A. Screws: Corrosion resistant type; non-staining, of size and strength to securely and rigidly retain the work; prefinished to match siding finish.

B. Accessory Components: Fascias of same material and finish as siding.

PART 3 EXECUTION 3.01 EXAMINATION

A. Verify that substrates are ready to receive work.

B. Verify that weather barrier has been installed over substrate completely and correctly.

C. Do not begin until unacceptable conditions have been corrected.

D. If substrate preparation is the responsibility of another installer, notify Architect of unsatisfactory preparation before proceeding.

3.02 PREPARATION

A. Do not install materials until site pre-finishing is complete and dry.

3.03 INSTALLATION

A. Install siding in accordance with manufacturer's instructions. B.

Fasten siding in place, level and plumb.

1. Arrange for orderly nailing pattern. Blind nail except on over trim.
2. Install siding for natural shed of water. C. Install corner strips.

D. Sand work smooth and set exposed nails and screws.

3.04 TOLERANCES

A. Maximum Variation From Plumb and Level: 1/4 inch per 10 feet.

B. Maximum Offset From Joint Alignment: 1/16 inch. **END OF SECTION**

SECTION 07 92 00 - JOINT SEALANTS

PART 1 GENERAL 1.01 SECTION INCLUDES

A. Nonsag gunnable joint sealants.

B. Self-leveling pourable joint sealants.

C. Joint backings and accessories.

D. Owner-provided field quality control.

1.02 RELATED REQUIREMENTS

A. Section 01 61 16 - Volatile Organic Compound (VOC) Content Restrictions: Additional requirements for sealants and primers.

B. Section 07 25 00 - Weather Barriers: Sealants required in conjunction with air barriers and vapor retarders.

C. Section 08 71 00 - Door Hardware: Setting exterior door thresholds in sealant.

D. Section 08 80 00 - Glazing: Glazing sealants and accessories.

1.03 REFERENCE STANDARDS

A. ASTM C661 - Standard Test Method for Indentation Hardness of Elastomeric-Type Sealants by Means of a Durometer; 2006 (Reapproved 2011).

B. ASTM C794 - Standard Test Method for Adhesion-In-Peel of Elastomeric Joint Sealants; 2015.

C. ASTM C834 - Standard Specification for Latex Sealants; 2010.

D. ASTM C920 - Standard Specification for Elastomeric Joint Sealants; 2014.

E. ASTM C1087 - Standard Test Method for Determining Compatibility of Liquid-Applied Sealants with Accessories Used in Structural Glazing Systems; 2000 (Reapproved 2011). F. ASTM C1193 - Standard Guide for Use of Joint Sealants; 2013.

G. ASTM C1248 - Standard Test Method for Staining of Porous Substrate by Joint Sealants; 2008 (Reapproved 2012).

H. ASTM C1311 - Standard Specification for Solvent Release Sealants; 2010.

I. ASTM C1330 - Standard Specification for Cylindrical Sealant Backing for Use with Cold Liquid-Applied Sealants; 2002 (Reapproved 2013).

J. ASTM C1521 - Standard Practice for Evaluating Adhesion of Installed Weatherproofing Sealant Joints; 2013.

K. ASTM D2240 - Standard Test Method for Rubber Property--Durometer Hardness; 2005 (Reapproved 2010).

L. SCAQMD 1168 - South Coast Air Quality Management District Rule No.1168; current edition; www.aqmd.gov.

M. SWRI (VAL) - SWR Institute Validated Products directory; Sealant, Waterproofing and Restoration Institute; online at http://www.swrionline.org/ValidatedSealants.

1.04 SUBMITTALS

A. See Section 01 30 00 - Administrative Requirements, for submittal procedures.

B. Product Data for Sealants: Submit manufacturer's technical data sheets for each product to be used, that includes the following.

1. Physical characteristics, including movement capability, VOC content, hardness, cure time, and color availability.
2. List of backing materials approved for use with the specific product.
3. Substrates that product is known to satisfactorily adhere to and with which it is compatible.
4. Substrates the product should not be used on.
5. Substrates for which use of primer is required.

6. Substrates for which laboratory adhesion and/or compatibility testing is required.
7. Installation instructions, including precautions, limitations, and recommended backing materials and tools.
8. Sample product warranty.
9. Certification by manufacturer indicating that product complies with specification requirements.
10. SWRI Validation: Provide currently available sealant product validations as published by SWRI for specified sealants.

C. Product Data for Accessory Products: Submit manufacturer's technical data sheet for each product to be used, including physical characteristics, installation instructions, and recommended tools.

D. Color Cards for Selection: Where sealant color is not specified, submit manufacturer's color cards showing standard colors available for selection.

E. Sustainable Design Documentation: For sealants and primers, submit VOC content and emissions documentation as specified in Section 01 61 16.

F. Preconstruction Laboratory Test Reports: Submit at least four weeks prior to start of installation.

G. Installation Plan: Submit at least four weeks prior to start of installation.

H. Preinstallation Field Adhesion Test Plan: Submit at least two weeks prior to start of installation.

I. Field Quality Control Plan: Submit at least two weeks prior to start of installation.

J. Preinstallation Field Adhesion Test Reports: Submit filled out Preinstallation Field Adhesion Test Reports log within 10 days after completion of tests; include bagged test samples and photographic records.

K. Installation Log: Submit filled out log for each length or instance of sealant installed.

L. Field Quality Control Log: Submit filled out log for each length or instance of sealant installed, within 10 days after completion of inspections/tests; include bagged test samples and photographic records, if any.

1.05 QUALITY ASSURANCE

A. Maintain one copy of each referenced document covering installation requirements on site.

B. Manufacturer Qualifications: Company specializing in manufacturing the products specified in this section with minimum three years documented experience.

C. Installer Qualifications: Company specializing in performing the work of this section with minimum three years documented experience and approved by manufacturer.

D. Preconstruction Laboratory Testing: Arrange for sealant manufacturer(s) to test each combination of sealant, substrate, backing, and accessories.
1. Adhesion Testing: In accordance with ASTM C794.
2. Compatibility Testing: In accordance with ASTM C1087.
3. Allow sufficient time for testing to avoid delaying the work.
4. Deliver to manufacturer sufficient samples for testing.
5. Report manufacturer's recommended corrective measures, if any, including primers or techniques not indicated in product data submittals.
6. Testing is not required if sealant manufacturer provides data showing previous testing, not older than 24 months, that shows satisfactory adhesion, lack of staining, and compatibility.

E. Installation Plan: Include schedule of sealed joints, including the following.
1. Joint width indicated in contract documents.

2. Joint depth indicated in contract documents; to face of backing material at centerline of joint.
3. Method to be used to protect adjacent surfaces from sealant droppings and smears, with acknowledgement that some surfaces cannot be cleaned to like-new condition and therefore prevention is imperative.
4. Approximate date of installation, for evaluation of thermal movement influence.
5. Installation Log Form: Include the following data fields, with known information filled out.
   a. Unique identification of each length or instance of sealant installed.
   b. Location on project.
   c. Substrates.
   d. Sealant used.
   e. Stated movement capability of sealant.
   f. Primer to be used, or indicate as "No primer" used.
   g. Size and actual backing material used.
   h. Date of installation.
   i. Name of installer.
   j. Actual joint width; provide space to indicate maximum and minimum width.
   k. Actual joint depth to face of backing material at centerline of joint.
   l. Air temperature.

F. Preinstallation Field Adhesion Test Plan: Include destructive field adhesion testing of one sample of each combination of sealant type and substrate, except interior acrylic latex sealants, and include the following for each tested sample.
   1. Identification of testing agency.
   2. Name(s) of sealant manufacturers' field representatives who will be observing
   3. Preinstallation Field Adhesion Test Log Form: Include the following data fields, with known information filled out. a. Test date.
      b. Location on project.
      c. Sealant used.
      d. Stated movement capability of sealant.
      e. Test method used.
      f. Date of installation of field sample to be tested.
      g. Date of test.
      h. Copy of test method documents.
      i. Age of sealant upon date of testing.
      j. Test results, modeled after the sample form in the test method document.
      k. Indicate use of photographic record of test.

G. Owner will employ an independent testing agency to perform the field quality control inspection and testing as referenced in PART 3 of this section and as follows, to prepare and submit the field quality control plan and log, and to provide recommendations of remedies in the case of failure.
   1. Contractor shall cooperate with testing agency and repair failures discovered and destructive test location damage. H. Field Quality Control Plan:
   1. Visual inspection of entire length of sealant joints.
   2. Non-destructive field adhesion testing of sealant joints, except interior acrylic latex sealants.
      a. Test the entire length of every sealant joint.
   3. Destructive field adhesion testing of sealant joints, except interior acrylic latex sealant.
      a. For each different sealant and substrate combination, allow for one test every 100 feet in the first 1000 linear feet, and one test per 1000 linear feet thereafter, or once per floor on each elevation.

b. If any failures occur in the first 1000 linear feet, continue testing at frequency of one test per 500 linear feet at no extra cost to Owner.

4. Field Quality Control Log Form: Show same data fields as on Preinstallation Field Adhesion Test Log, with known information filled out and lines for multiple tests per sealant/substrate combinations; include visual inspection and specified field testing; allow for possibility that more tests than minimum specified may be necessary. I. Field Adhesion Test Procedures:

1. Allow sealants to fully cure as recommended by manufacturer before testing.
2. Have a copy of the test method document available during tests.
3. Record the type of failure that occurred, other information required by test method, and the information required on the Field Quality Control Log.
4. When performing destructive tests, also inspect the opened joint for proper installation characteristics recommended by manufacturer, and report any deficiencies.
5. Deliver the samples removed during destructive tests in separate sealed plastic bags, identified with project, location, test date, and test results, to Owner.
6. If any combination of sealant type and substrate does not show evidence of minimum adhesion or shows cohesion failure before minimum adhesion, report results to Architect. J. Non-Destructive Field Adhesion Test: Test for adhesion in accordance with ASTM C1521, using Nondestructive Continuous Method.

K. Destructive Field Adhesion Test: Test for adhesion in accordance with ASTM C1521, using Destructive Tail Procedure.

1. Sample: At least 18 inch long.
2. Minimum Elongation Without Adhesive Failure: Consider the tail at rest, not under any elongation stress; multiply the stated movement capability of the sealant in percent by two; then multiply 1 inch by that percentage; if adhesion failure occurs before the "1 inch mark" is that distance from the substrate, the test has failed.
3. If either adhesive or cohesive failure occurs prior to minimum elongation, take necessary measures to correct conditions and re-test; record each modification to products or installation procedures.

L. Field Adhesion Tests of Joints: Test for adhesion using most appropriate method in accordance with ASTM C1521, or other applicable method as recommended by manufacturer. **1.06 WARRANTY**

A. See Section 01 78 00 - Closeout Submittals, for additional warranty requirements.

B. Correct defective work within a five year period after the Date of Substantial Completion.

C. Warranty: Include coverage for installed sealants and accessories that fail to achieve watertight seal, exhibit loss of adhesion or cohesion, or do not cure.

PART 2 PRODUCTS 2.01 MANUFACTURERS

A. Nonsag Sealants: Permits application in joints on vertical surfaces without sagging or slumping.

1. BASF Construction Chemicals-Building Systems: www.buildingsystems.basf.com.
2. Bostik Inc: www.bostik-us.com.
3. Dow Corning Corporation: www.dowcorning.com.
4. Franklin International, Inc.: www.titebond.com.
5. Hilti, Inc: www.us.hilti.com.
6. Momentive Performance Materials, Inc (formerly GE Silicones): www.momentive.com.
7. Pecora Corporation: www.pecora.com.
8. Tremco Global Sealants: www.tremcosealants.com.
9. Sherwin-Williams Company: www.sherwin-williams.com.
10. Sika Corporation: www.usa-sika.com.
11. W.R. Meadows, Inc: www.wrmeadows.com.
12. Substitutions: See Section 01 60 00 - Product Requirements.

B. Selfleveling Sealants: Pourable or self-leveling sealant that has sufficient flow to form a smooth, level surface when applied in a horizontal joint.
   1. BASF Construction Chemicals-Building Systems: www.buildingsystems.basf.com.
   2. Bostik Inc: www.bostik-us.com.
   3. Dayton Superior Corporation: www.daytonsuperior.com.
   4. Dow Corning Corporation: www.dowcorning.com.
   5. Pecora Corporation: www.pecora.com.
   6. Tremco Global Sealants: www.tremcosealants.com.
   7. Sherwin-Williams Company: www.sherwin-williams.com.
   8. Sika Corporation: www.usa-sika.com.
   9. W.R. Meadows, Inc: www.wrmeadows.com.
   10. Substitutions: See Section 01 60 00 - Product Requirements.

2.02 JOINT SEALANT APPLICATIONS A.

Scope:

1. Exterior Joints: Seal open joints, whether or not the joint is indicated on the drawings, unless specifically indicated not to be sealed. Exterior joints to be sealed include, but are not limited to, the following items.
   a. Joints between door, window, and other frames and adjacent construction.
   b. Joints between different exposed materials.
   c. Openings below ledge angles in masonry.
   d. Other joints indicated below.
2. Interior Joints: Do not seal interior joints unless specifically indicated to be sealed. Interior joints to be sealed include, but are not limited to, the following items.
   a. Joints between door, window, and other frames and adjacent construction.
   b. Other joints indicated below.
3. Do not seal the following types of joints.
   a. Intentional weepholes in masonry.
   b. Joints indicated to be treated with manufactured expansion joint cover or some other type of sealing device.
   c. Joints where sealant is specified to be provided by manufacturer of product to be sealed.
   d. Joints where installation of sealant is specified in another section.
   e. Joints between suspended panel ceilings/grid and walls.

B. Exterior Joints: Use nonsag non-staining silicone sealant, Type 1, unless otherwise indicated.
   1. Lap Joints in Sheet Metal Fabrications: Butyl rubber, non-curing; Type 2.
   2. Control and Expansion Joints in Concrete Paving: Self-leveling polyurethane "traffic-grade" sealant; Type 3.
   3. Wiring Slots in Concrete Paving: Self-leveling epoxy sealant; Type 4.
   4. Cooling Tower and Fountain Basins: Nonsag polyurethane sealant for continuous immersion; Type 5.

C. Interior Joints: Use nonsag polyurethane sealant, Type 6, unless otherwise indicated.
   1. Wall and Ceiling Joints in Non-Wet Areas: Acrylic emulsion latex sealant; Type 7.
   2. Wall and Ceiling Joints in Wet Areas: Nonsag polyurethane sealant for continuous liquid immersion; Type 5.
   3. Floor Joints in Wet Areas: Nonsag polyurethane "nontraffic-grade" sealant suitable for continuous liquid immersion; Type 5.
   4. Wall, Ceiling, and Floor Joints Where Tamper-Resistance is Required: Nonsag tamper-resistant silyl-terminated polyurethane sealant; Type 8.
   5. Joints between Fixtures in Wet Areas and Floors, Walls, and Ceilings: Mildew-resistant silicone sealant; white; Type 9.
   6. In Sound-Rated Assemblies: Acrylic emulsion latex sealant; Type 7.

7. Narrow Control Joints in Interior Concrete Slabs: Self-leveling epoxy sealant; Type 4.
8. Other Floor Joints: Self-leveling polyurethane "traffic-grade" sealant; Type 5.

D. Interior Wet Areas: Bathrooms, restrooms, kitchens, food service areas, food processing areas, and 9; fixtures in wet areas include plumbing fixtures, food service equipment, countertops, cabinets, and other similar items.

E. Sound-Rated Assemblies: Walls and ceilings identified as "STC-rated", "sound-rated", or "acoustical".

F. Areas Where Tamper-Resistance is Required: As indicated on the drawings.

2.03 JOINT SEALANTS - GENERAL

A. Sealants and Primers: Provide products having lower volatile organic compound (VOC) content than indicated in South Coast Air Quality Management District (SCAQMD); Rule 1168. B. Colors: As indicated on the drawings.

2.04 NONSAG JOINT SEALANTS

A. Type 1 - Non-Staining Silicone Sealant: ASTM C920, Grade NS, Uses M and A; not expected to withstand continuous water immersion or traffic.
   1. Movement Capability: Plus and minus 50 percent, minimum.
   2. Non-Staining To Porous Stone: Non-staining to light-colored natural stone when tested in accordance with ASTM C1248.
   3. Dirt Pick-Up: Reduced dirt pick-up compared to other silicone sealants.
   4. Hardness Range: 15 to 35, Shore A, when tested in accordance with ASTM C661.
   5. Color: Match adjacent finished surfaces.
   6. Cure Type: Single-component, neutral moisture curing.
   7. Service Temperature Range: Minus 65 to 180 degrees F.
   8. Products:
      a. Dow Corning Corporation; 756 SMS Building Sealant: www.dowcorning.com.
      b. Dow Corning Corporation; 790 Silicone Building Sealant: www.dowcorning.com.
      c. Dow Corning Corporation; 791 Silicone Weatherproofing Sealant: www.dowcorning.com.
      d. Dow Corning Corporation; 795 Silicone Building Sealant: www.dowcorning.com.
      e. Pecora Corporation; 890NST Ultra Low Modulus Architectural Silicone Sealant - Class 100: www.pecora.com.
      f. Pecora Corporation; 890FTS Field Tintable Ultra Low Modulus Architectural Silicone Sealant - Class 50: www.pecora.com.
      g. Pecora Corporation; 890FTS-TXTR Field Tintable Textured Ultra Low Modulus Architectural Silicone Sealant - Class 100: www.pecora.com.
      h. Pecora Corporation; 864NST Low Modulus Architectural Silicone Sealant - Class 50: www.pecora.com.
      i. Pecora Corporation; 895NST Medium Modulus Structural Glazing & Weatherproofing Silicone Sealant - Class 50: www.pecora.com.
      j. Sika Corporation; Sikasil WS-290: www.usa-sika.com.
      k. Sika Corporation; Sikasil 728NS: www.usa-sika.com.

B. Type 9 - Mildew-Resistant Silicone Sealant: ASTM C920, Grade NS, Uses M and A; single component, mildew resistant; not expected to withstand continuous water immersion or traffic.
   1. Color: White.
   2. Products:
      a. Pecora Corporation; 898NST Sanitary Silicone Sealant - Class 50: www.pecora.com.
      b. Sika Corporation; Sikasil GP: www.usa-sika.com.
      c. Momentive Performance Materials; SCS1702: www.momentive.com..
      d. Substitutions: See Section 01 60 00 - Product Requirements.

C. Type 6 - Polyurethane Sealant: ASTM C920, Grade NS, Uses M and A; single or multicomponent; not expected to withstand continuous water immersion or traffic.
   1. Movement Capability: Plus and minus 25 percent, minimum.
   2. Hardness Range: 20 to 35, Shore A, when tested in accordance with ASTM C661.
   3. Color: To be selected by Architect from manufacturer's standard range.
   4. Service Temperature Range: Minus 40 to 180 degrees F.
   5. Products:
      a. Pecora Corporation; DynaTrol I-XL General Purpose One Part Polyurethane Sealant: www.pecora.com.
      b. Pecora Corporation; DynaTrol II General Purpose Two Part Polyurethane Sealant: www.pecora.com.
      c. The QUIKRETE Companies; QUIKRETE® Polyurethane Non-Sag Sealant: www.quikrete.com.
      d. Sherwin-Williams Company; Stampede-1/-TX Polyurethane Sealant: www.sherwin-williams.com.
      e. Sherwin-Williams Company; Stampede 2NS Polyurethane Sealant: www.sherwin-williams.com.
      f. Sika Corporation; Sikaflex-1a: www.usa-sika.com.
      g. Sika Corporation; Sikaflex-15 LM: www.usa-sika.com.
      h. Sika Corporation; Sikaflex-2c NS: www.usa-sika.com.
      i. W. R. MEADOWS, Inc.; POURTHANE NS: www.wrmeadows.com.
      j. Substitutions: See Section 01 60 00 - Product Requirements.

D. Type 4 - Epoxy Sealant: ASTM C920, Grade NS, Uses M and A; single or multicomponent; not expected to withstand continuous water immersion or traffic.
   1. Hardness Range: 65 to 75, Shore A, when tested in accordance with ASTM C661.
   2. Color: Match adjacent finished surfaces.
   3. Service Temperature Range: Minus 40 to 180 degrees F.
   4. Products:
      a. Pecora Corporation; Dynapoxy EP-1200 Two-Part Epoxy Security Sealant: www.pecora.com.

E. Type 7 - Acrylic Emulsion Latex: Water-based; ASTM C834, single component, non-staining, non-bleeding, non-sagging; not intended for exterior use.
   1. Color: To be selected by Architect from manufacturer's standard range.
   2. Grade: ASTM C834; Grade - Minus 18 Degrees C.
   3. Products:
      a. Hilti, Inc.; CP 506 Smoke and Acoustical Sealant: www.us.hilti.com.
      b. Hilti, Inc.; CP 572 Smoke and Acoustical Spray Sealant: www.us.hilti.com.
      c. Pecora Corporation; AC-20 + Silicone Acrylic Latex Caulking Compound: www.pecora.com.
      d. Pecora Corporation; AC-20 FTR Acoustical and Insulation Sealant: www.pecora.com.
      e. Sherwin-Williams Company; White Lightning 3006 Siliconized Acrylic Latex Caulk: www.sherwin-williams.com.
      f. Sherwin-Williams Company; 850A Acrylic Latex Caulk: www.sherwin-williams.com.
      g. Substitutions: See Section 01 60 00 - Product Requirements.

F. Type 2 - Non-Curing Butyl Sealant: Solvent-based; ASTM C1311; single component, nonsag, non-skinning, non-hardening, non-bleeding; vapor-impermeable; intended for fully concealed applications.
   1. Products:
      a. Substitutions: See Section 01 60 00 - Product Requirements.

2.05 SELF-LEVELING SEALANTS

A. Type 10 - Self-Leveling Silicone Sealant: ASTM C920, Grade P, Uses M and A; single or multicomponent, explicitly approved by manufacturer for traffic exposure when recessed below traffic surface; not expected to withstand continuous water immersion.
   1. Movement Capability: Plus 100 percent, minus 50 percent, minimum.
   2. Hardness Range: 0 to 15, Shore A, when tested in accordance with ASTM C661.
   3. Color: To be selected by Architect from manufacturer's standard range.
   4. Service Temperature Range: Minus 40 to 180 degrees F.
   5. Products:
      a. Sika Corporation; Sikasil 728RCS: www.usa-sika.com.
      b. Sika Corporation; Sikasil 728SL: www.usa-sika.com.

B. Type 11 - Self-Leveling Polyurethane Sealant: ASTM C920, Grade P, Uses M and A; single or multicomponent; explicitly approved by manufacturer for traffic exposure; not expected to withstand continuous water immersion.
   1. Movement Capability: Plus and minus 25 percent, minimum.
   2. Hardness Range: 35 to 55, Shore A, when tested in accordance with ASTM C661.
   3. Color: To be selected by Architect from manufacturer's standard range.
   4. Service Temperature Range: Minus 40 to 180 degrees F.
   5. Products:
      a. Pecora Corporation; NR-200 Self-Leveling Traffic-Grade Polyurethane Sealant: www.pecora.com.
      b. The QUIKRETE Companies; QUIKRETE® Polyurethane Self-Leveling Sealant: www.quikrete.com.
      c. Sherwin-Williams Company; Stampede 2SL Polyurethane Sealant: www.sherwin-williams.com.
      d. Sika Corporation; Sikaflex-2c SL: www.usa-sika.com.

C. Type ___ - Self-Leveling Polyurethane Sealant for Continuous Water Immersion: Polyurethane; ASTM C920, Grade P, Uses M and A; single or multicomponent; explicitly approved by manufacturer for traffic exposure and continuous water immersion.
   1. Movement Capability: Plus and minus 25 percent, minimum.

D. Type 12 - Semi-Rigid Self-Leveling Epoxy Joint Filler: Epoxy or epoxy/polyurethane copolymer; intended for filling cracks and control joints not subject to significant movement; rigid enough to support concrete edges under traffic.
   1. Composition: Multicomponent, 100 percent solids by weight.
   2. Hardness: Minimum of 85 (Shore A) or 35 (Shore D), when tested in accordance with ASTM D2240 after 7 days.
   3. Color: To be selected by Architect from manufacturer's standard colors.
   4. Joint Width, Minimum: 1/8 inch.
   5. Joint Width, Maximum: 1/4 inch.
   6. Joint Depth: Provide product suitable for joints from 1/8 inch to 2 inches in depth including space for backer rod.
   7. Products:
      a. Dayton Superior Corporation; Pro-Poxy P606: www.daytonsuperior.com.
      b. Nox-Crete; DynaFlex 502: www.nox-crete.com
      c. W.R. Meadows, Inc; Rezi-Weld Flex: www.wrmeadows.com.
      d. Substitutions: See Section 01 60 00 - Product Requirements.

2.06 ACCESSORIES

A. Backer Rod: Cylindrical cellular foam rod with surface that sealant will not adhere to, compatible with specific sealant used, and recommended by backing and sealant manufacturers for specific application.

1. Type for Joints Not Subject to Pedestrian or Vehicular Traffic: ASTM C1330; Type O - Open Cell Polyurethane.
2. Open Cell: 40 to 50 percent larger in diameter than joint width.
3. Closed Cell and Bi-Cellular: 25 to 33 percent larger in diameter than joint width.
4. Products:
   a. Dow Chemical Company: Product Ethafoam SB..
   b. Nomaco HBR Closed Cell Backer Rod: www.nomacoefs.com.

B. Backing Tape: Self-adhesive polyethylene tape with surface that sealant will not adhere to and recommended by tape and sealant manufacturers for specific application.

C. Masking Tape: Self-adhesive, nonabsorbent, non-staining, removable without adhesive residue, and compatible with surfaces adjacent to joints and sealants.

D. Joint Cleaner: Non-corrosive and non-staining type, type recommended by sealant manufacturer; compatible with joint forming materials.

E. Primers: Type recommended by sealant manufacturer to suit application; non-staining.

PART 3 EXECUTION 3.01 EXAMINATION

A. Verify that joints are ready to receive work.

B. Verify that backing materials are compatible with sealants.

C. Verify that backer rods are of the correct size.

D. Preinstallation Adhesion Testing: Install a sample for each test location shown in the test plan.
1. Test each sample as specified in PART 1 under QUALITY ASSURANCE article.
2. Notify Architect of date and time that tests will be performed, at least 7 days in advance.
3. Arrange for sealant manufacturer's technical representative to be present during tests.
4. Record each test on Preinstallation Adhesion Test Log as indicated.
5. If any sample fails, review products and installation procedures, consult manufacturer, or take whatever other measures are necessary to ensure adhesion; re-test in a different location; if unable to obtain satisfactory adhesion, report to Architect.
6. After completion of tests, remove remaining sample material and prepare joint for new sealant installation.

3.02 PREPARATION

A. Remove loose materials and foreign matter that could impair adhesion of sealant.

B. Clean joints, and prime as necessary, in accordance with manufacturer's instructions.

C. Perform preparation in accordance with manufacturer's instructions and ASTM C1193.

D. Mask elements and surfaces adjacent to joints from damage and disfigurement due to sealant work; be aware that sealant drips and smears may not be completely removable.

E. Concrete Floor Joints That Will Be Exposed in Completed Work: Test joint filler in inconspicuous area to verify that it does not stain or discolor slab.

3.03 INSTALLATION

A. Perform work in accordance with sealant manufacturer's requirements for preparation of surfaces and material installation instructions.

B. Perform installation in accordance with ASTM C1193.

C. Install bond breaker backing tape where backer rod cannot be used.

D. Install sealant free of air pockets, foreign embedded matter, ridges, and sags, and without getting sealant on adjacent surfaces.

E. Do not install sealant when ambient temperature is outside manufacturer's recommended temperature range, or will be outside that range during the entire curing period, unless manufacturer's approval is obtained and instructions are followed.

F. Nonsag Sealants: Tool surface concave, unless otherwise indicated; remove masking tape immediately after tooling sealant surface.

G. Concrete Floor Joint Filler: After full cure, shave joint filler flush with top of concrete slab.

3.04 FIELD QUALITY CONTROL

A. Owner will employ an independent testing agency to perform field quality control inspection and testing as specified in PART 1 under QUALITY ASSURANCE article.

B. Non-Destructive Adhesion Testing: If there are any failures in first 100 linear feet, notify Architect immediately.

C. Destructive Adhesion Testing: If there are any failures in first 1000 linear feet, notify Architect immediately.

D. Remove and replace failed portions of sealants using same materials and procedures as indicated for original installation.

E. Repair destructive test location damage immediately after evaluation and recording of results.

3.05 POST-OCCUPANCY

A. Post-Occupancy Inspection: Perform visual inspection of entire length of project sealant joints at a time that joints have opened to their greatest width; i.e. at the low temperature in the thermal cycle. Report failures immediately and repair.

END OF SECTION

SECTION 08 11 13 - HOLLOW METAL DOORS AND FRAMES

PART 1 GENERAL 1.01 SECTION INCLUDES

A. Non-fire-rated steel doors and frames.

B. Thermally insulated steel doors.

1.02 RELATED REQUIREMENTS

A. Section 08 71 00 - Door Hardware.

B. Section 09 91 13 - Exterior Painting: Field painting.

1.03 REFERENCE STANDARDS

A. ADA Standards - Americans with Disabilities Act (ADA) Standards for Accessible Design; 2010.

B. ANSI/ICC A117.1 - American National Standard for Accessible and Usable Buildings and Facilities; International Code Council; 2009.

C. ANSI/SDI A250.8 - Specifications for Standard Steel Doors and Frames (SDI-100); 2014.

D. ANSI/SDI A250.10 - Test Procedure and Acceptance Criteria for Prime Painted Steel Surfaces for Steel Doors and Frames; 2011.

E. ASTM A653/A653M - Standard Specification for Steel Sheet, Zinc-Coated (Galvanized) or Zinc-Iron Alloy-Coated (Galvannealed) by the Hot-Dip Process; 2013.

F. ASTM C1363 - Standard Test Method for Thermal Performance of Building Assemblies by Means of a Hot Box Apparatus; 2011.

G. BHMA A156.115 - American National Standard for Hardware Preparation in Steel Doors and Steel Frames; 2014. (ANSI/BHMA A156.115)

H. ICC A117.1 - Accessible and Usable Buildings and Facilities; International Code Council; 2009 (ANSI).

I. NAAMM HMMA 840 - Guide Specifications for Installation and Storage of Hollow Metal Doors and Frames; The National Association of Architectural Metal Manufacturers; 2007. J. NFPA 80 - Standard for Fire Doors and Other Opening Protectives; 2013.

K. UL 10B - Standard for Fire Tests of Door Assemblies; Current Edition, Including All Revisions.

1.04 SUBMITTALS

A. See Section 01 30 00 - Administrative Requirements, for submittal procedures.

B. Product Data: Materials and details of design and construction, hardware locations, reinforcement type and locations, anchorage and fastening methods, and finishes; and one copy of referenced grade standard.

C. Shop Drawings: Details of each opening, showing elevations, glazing, frame profiles, and identifying location of different finishes, if any.

D. Installation Instructions: Manufacturer's published instructions, including any special installation instructions relating to this project.

E. Manufacturer's Certificate: Certification that products meet or exceed specified requirements.

1.05 QUALITY ASSURANCE

A. Manufacturer Qualifications: Company specializing in manufacturing the products specified in this section with minimum three years documented experience.

B. Maintain at the project site a copy of all reference standards dealing with installation.

1.06 DELIVERY, STORAGE, AND HANDLING

A. Store in accordance with NAAMM HMMA 840.

B. Protect with resilient packaging; avoid humidity build-up under coverings; prevent corrosion.

2.01 MANUFACTURERS

A. Steel Doors and Frames:
1. Assa Abloy Ceco, Curries, or Fleming: www.assaabloydss.com.
2. Republic Doors: www.republicdoor.com.
3. Steelcraft, an Allegion brand: www.allegion.com/us.
4. Substitutions: See Section 01 60 00 - Product Requirements.

2.02 DOORS AND FRAMES

A. Requirements for All Doors and Frames:
1. Accessibility: Comply with ICC A117.1 and ADA Standards.
2. Door Top Closures: Flush with top of faces and edges.
3. Door Edge Profile: Beveled on both edges.
4. Door Texture: Smooth faces.
5. Glazed Lights: Non-removable stops on non-secure side; sizes and configurations as indicated on drawings.
6. Hardware Preparation: In accordance with BHMA A156.115, with reinforcement welded in place, in addition to other requirements specified in door grade standard.
7. Galvanizing for Units in Wet Areas: Components hot-dipped zinc-iron alloy-coated (galvannealed) in accordance with ASTM A653/A653M, with manufacturer's standard coating thickness
8. Finish: Factory primed, for field finishing.

B. Combined Requirements: If a particular door and frame unit is indicated to comply with more than one type of requirement, comply with all the specified requirements for each type; for instance, an exterior door that is also indicated as being sound-rated must comply with the requirements specified for exterior doors and for sound-rated doors; where two requirements conflict, comply with the most stringent.

2.03 STEEL DOORS

A. Exterior Doors:
1. Grade: ANSI/SDI A250.8 (SDI-100); Level 3 - Extra Heavy-Duty, Physical Performance Level A, Model 2 - Seamless.
2. Core: Vertical steel stiffeners.
3. Galvanizing: Components hot-dipped zinc-iron alloy-coated (galvannealed) in accordance with ASTM A653/A653M, with manufacturer's standard coating thickness.
4. Insulating Value: U-value of 0.50, when tested in accordance with ASTM C1363.
5. Weatherstripping: Separate, see Section 08 71 00.
6. Air Leakage: shall not exceed 0.3 cfm per square foot (1.5 L/s/m2), and swinging doors no more than 0.5 cfm per square foot (2.6 L/s/m2) as determined in accordance with AAMA/WDMA/CSA 101/I.S.2/A440, or NFRC 400 by an accredited, independent laboratory, and labeled and certified by the manufacturer.
7. Finish: Factory primed, and field finished.

2.04 STEEL FRAMES A.

General:

1. Comply with the requirements of grade specified for corresponding door.
   a. ANSI/SDI A250.8 (SDI-100), Level 2 and 3 Door Frames: 14 gage, 0.067 inch, minimum thickness.
2. Finish: Same as for door.
3. Provide mortar guard boxes for hardware cut-outs in frames to be installed in masonry or to be grouted.

B. Exterior Door Frames: Fully welded type.
1. Galvanizing: Components hot-dipped zinc-iron alloy-coated (galvannealed) in accordance with ASTM A653/A653M, with manufacturer's standard coating thickness.

2. Weatherstripping: Separate, see Section 08 71 00.

2.05 ACCESSORY MATERIALS

A. Silencers: Resilient rubber, fitted into drilled hole; 3 on strike side of single door, 3 on center mullion of pairs, and 2 on head of pairs without center mullions.

B. Temporary Frame Spreaders: Provide for all factory- or shop-assembled frames.

2.06 FINISH MATERIALS

A. Primer: Rust-inhibiting, complying with ANSI/SDI A250.10, door manufacturer's standard.

B. Bituminous Coating: Asphalt emulsion or other high-build, water-resistant, resilient coating.

PART 3 EXECUTION 3.01 EXAMINATION

A. Verify existing conditions before starting work.

B. Verify that opening sizes and tolerances are acceptable.

3.02 PREPARATION

A. Coat inside of frames to be installed in masonry or to be grouted, with bituminous coating, prior to installation.

3.03 INSTALLATION

A. Install in accordance with the requirements of the specified door grade standard and NAAMM HMMA 840.

B. Coordinate frame anchor placement with wall construction.

C. Coordinate installation of hardware.

D. Coordinate installation of electrical connections to electrical hardware items.

E. Touch up damaged factory finishes.

3.04 TOLERANCES

A. Clearances Between Door and Frame: As indicated in ANSI/SDI A250.8 (SDI-100).

B. Maximum Diagonal Distortion: 1/16 in measured with straight edge, corner to corner. **3.05 ADJUSTING**

A. Adjust for smooth and balanced door movement.

B. Test sound control doors for force to close, latch, and unlatch; adjust as necessary in compliance with requirements.

END OF SECTION

SECTION 08 43 13 - ALUMINUM-FRAMED STOREFRONTS

PART 1 GENERAL 1.01 SECTION INCLUDES

A. Aluminum-framed storefront, with vision glass.

1.02 RELATED REQUIREMENTS

A. Section 07 25 00 - Weather Barriers: Sealing framing to weather barrier installed on adjacent construction.

B. Section 07 84 00 - Firestopping: Firestop at system junction with structure.

C. Section 08 80 00 - Glazing: Glass and glazing accessories.

1.03 REFERENCE STANDARDS

A. AAMA CW-10 - Care and Handling of Architectural Aluminum From Shop to Site; American Architectural Manufacturers Association; 2012.

B. AAMA 501.2 - Field Check of Metal Storefronts, Curtain Walls, and Sloped Glazing Systems for Water Leakage; American Architectural Manufacturers Association; 2009 (part of AAMA 501).

C. AAMA 1503 - Voluntary Test Method for Thermal Transmittance and Condensation Resistance of Windows, Doors and Glazed Wall Sections; American Architectural Manufacturers Association; 2009.

D. AAMA 2605 - Voluntary Specification, Performance Requirements and Test Procedures for Superior Performing Organic Coatings on Aluminum Extrusions and Panels; 2013.

E. ASCE 7 - Minimum Design Loads for Buildings and Other Structures; American Society of Civil Engineers; 2011.

F. ASTM A36/A36M - Standard Specification for Carbon Structural Steel; 2014.

G. ASTM A123/A123M - Standard Specification for Zinc (Hot-Dip Galvanized) Coatings on Iron and Steel Products; 2013.

H. ASTM E331 - Standard Test Method for Water Penetration of Exterior Windows, Skylights, Doors, and Curtain Walls by Uniform Static Air Pressure Difference; 2000 (Reapproved 2009).

I. ASTM E1105 - Standard Test Method for Field Determination of Water Penetration of Installed Exterior Windows, Skylights, Doors, and Curtain Walls, by Uniform or Cyclic Static Air Pressure Difference; 2000 (Reapproved 2008)

J. ASTM E1996 - Standard Specification for Performance of Exterior Windows, Curtain Walls, Doors, and Impact Protective Systems Impacted by Windborne Debris in Hurricanes; 2014.

K. SSPC-Paint 20 - Zinc-Rich Primers (Type I, "Inorganic," and Type II, "Organic"); Society for Protective Coatings; 2002 (Ed. 2004).

1.04 ADMINISTRATIVE REQUIREMENTS

A. Coordinate with installation of other components that comprise the exterior enclosure.

B. Preinstallation Meeting: Conduct a preinstallation meeting one week before starting work of this section; require attendance by all affected installers.

1.05 PERFORMANCE REQUIREMENTS

A. Design and size components to withstand the following load requirements without damage or permanent set, when tested in accordance with ASTM E 330, using loads 1.5 times the design wind loads and 10 second duration of maximum load.
   1. Design Wind Loads: Comply with requirements of the Building code of the City of New York.
   2. Member Deflection: Limit member deflection to flexure limit of glass in any direction, with full recovery of glazing materials.

B. Movement: Accommodate movement between storefront and perimeter framing and deflection of lintel, without damage to components or deterioration of seals.

C. Air Infiltration: Limit air infiltration through assembly to 0.06 cu ft/min/sq ft of wall area, measured at a reference differential pressure across assembly of 6.24 psf as measured in accordance with ASTM E 283.

D. Water Leakage: None, when measured in accordance with ASTM E 331 with a test pressure difference of 8.00 lbf/sq ft.

E. System Internal Drainage: Drain to the exterior by means of a weep drainage network any water entering joints, condensation occurring in glazing channel, and migrating moisture occurring within system.

F. Air and Vapor Seal: Maintain continuous air barrier and vapor retarder throughout assembly, primarily in line with inside pane of glass and heel bead of glazing compound.

G. Expansion/Contraction: Provide for expansion and contraction within system components caused by cycling temperature range of 170 degrees F over a 12 hour period without causing detrimental effect to system components, anchorages, and other building elements.

H. Windborne-Debris-Impact-Performance: Shall be tested in accordannce with ASTM E 1886 and information in ASTM E 1886 and information in ASTM E 1996 and/or AAMA 506. 1. Large-Missile Impact: For aluminum-framed systems located within 30 feet of grade. **1.06 SUBMITTALS**

A. See Section 01 30 00 - Administrative Requirements, for submittal procedures.

B. Product Data: Provide component dimensions, describe components within assembly, anchorage and fasteners, glass and infill, internal drainage details.

C. Shop Drawings: Indicate system dimensions, framed opening requirements and tolerances, affected related Work, expansion and contraction joint location and details, and field welding required.

D. Samples: Submit two mullion section samples 4-1/2"x 6" inches in size illustrating finished aluminum surface, glass, infill panels, glazing materials.

E. Manufacturer's Certificate: Certify that the products supplied meet or exceed the specified requirements.

F. Design Data: Provide framing member structural and physical characteristics, engineering calculations, and dimensional limitations.

G. Samples: Submit two samples 6 x 6 inches in size illustrating finished aluminum surface, glass, infill panels, glazing materials.

H. Manufacturer's Certificate: Certify that the products supplied meet or exceed the specified requirements.

I. Report of field testing for water leakage.

J. Warranty: Submit manufacturer warranty and ensure forms have been completed in Owner's name and registered with manufacturer.

1.07 QUALITY ASSURANCE

A. Designer Qualifications: Design structural support framing components under direct supervision of a Professional Structural Engineer experienced in design of this Work and licensed at New York State.

B. Manufacturer and Installer Qualifications: Company specializing in manufacturing aluminum glazing systems with minimum three years of documented experience.

1.08 MOCKUPS

A. Build mockups to verify selections made under sample submittals and to demonstrate aesthetic effects and set quality standards for materials an execution. 1. Build mockup of typical fixed lite and adjacent glazed door.

1.09 DELIVERY, STORAGE, AND HANDLING

A. Handle products of this section in accordance with AAMA CW-10.

B. Protect finished aluminum surfaces with wrapping. Do not use adhesive papers or sprayed coatings that bond to aluminum when exposed to sunlight or weather.

1.10 FIELD CONDITIONS

A. Do not install sealants when ambient temperature is less than 40 degrees F. Maintain this minimum temperature during and 48 hours after installation.

1.11 WARRANTY

A. See Section 01 78 00 - Closeout Submittals, for additional warranty requirements.

B. Correct defective Work within a five year period after Date of Substantial Completion.

C. Provide ten year manufacturer warranty against failure of glass seal on insulating glass units, including interpane dusting or misting. Include provision for replacement of failed units.

D. Provide ten year manufacturer warranty against excessive degradation of exterior finish. Include provision for replacement of units with excessive fading, chalking, or flaking.

PART 2 PRODUCTS

2.01 BASIS OF DESIGN -- FRAMING FOR MONOLITHIC GLAZING A.

Wind-Borne-Debris Resistance Tested:

1. Basis of Design: Kawneer Company Inc.;

Product EnCORE Framing System:

www.kawneer.com..

2. Vertical Mullion Dimensions: 1-3/4 x 3-9/16

inches. B. Front/Outside-Set Style:

1. Basis of Design: Kawneer, EnCORE Framing System.
2. Vertical Mullion Dimensions: 1-3/4 inches wide by 3-9/16 inches deep..

C. Other Manufacturers: Provide either the product identified as "Basis of Design" or an equivalent product of one of the manufacturers listed below:

D. Substitutions: See Section 01 60 00 - Product Requirements.

2.02 MANUFACTURERS

A. Basis of Design: See below under description of products. B.

Aluminum-Framed Storefront and Doors:

1. Kawneer Company, Inc.; EnCORE Framing System: www.kawneer.com.
2. Substitutions: See Section 01 60 00 - Product Requirements.

2.03 STOREFRONT

A. Aluminum-Framed Storefront: Factory fabricated, factory finished aluminum framing members with infill, and related flashings, anchorage and attachment devices.
   1. Unitized, shop assembly.
   2. Glazing Rabbet: For 1/4 inch monolithic laminated glazing.
   3. Vertical Mullion Dimensions: 1-3/4 inches wide by 3-9/16 inches deep..
   4. Design Wind Load: 30 psf, positive and negative.
   5. Water Leakage Test Pressure Differential: 8 lbf/sq ft.
   6. Air Infiltration Test Pressure Differential: 6.24 psf.
   7. Overall U-Value Including Glazing: 1.02, maximum.
   8. Finish: Superior performing organic coatings.
      a. Factory finish all surfaces that will be exposed in completed assemblies.
      b. Touch-up surfaces cut during fabrication so that no natural aluminum is visible in completed assemblies, including joint edges.
   9. Color: As selected from manufacturer's standards colors.

10. Fabrication: Joints and corners flush, hairline, and weatherproof, accurately fitted and secured; prepared to receive anchors and hardware; fasteners and attachments concealed from view; reinforced as required for imposed loads.
11. Construction: Eliminate noises caused by wind and thermal movement, prevent vibration harmonics, and prevent "stack effect" in internal spaces.
12. System Internal Drainage: Drain to the exterior by means of a weep drainage network any water entering joints, condensation occurring in glazing channel, and migrating moisture occurring within system.
13. Expansion/Contraction: Provide for expansion and contraction within system components caused by cycling temperature range of 170 degrees F over a 12 hour period without causing detrimental effect to system components, anchorages, and other building elements.
14. Movement: Allow for movement between storefront and adjacent construction, without damage to components or deterioration of seals.
15. Perimeter Clearance: Minimize space between framing members and adjacent construction while allowing expected movement.
16. Air and Vapor Seal: Maintain continuous air barrier and vapor retarder throughout assembly, primarily in line with inside pane of glazing and inner sheet of infill panel and heel bead of glazing compound.
17. Preparation for Window Treatments: Provide reinforced interior horizontal head rail. B.

Performance Requirements:

1. Wind Loads: Design and size components to withstand the specified load requirements without damage or permanent set, when tested in accordance with ASTM E330/E330M, using loads 1.5 times the design wind loads and 10 second duration of maximum load.
   a. Design Wind Loads: Comply with requirements of ASCE 7.
   b. Member Deflection: Limit member deflection to flexure limit of glass in any direction, with full recovery of glazing materials.
2. Wind-Borne-Debris Resistance: Identical full-size glazed assembly without auxiliary protection, tested by independent agency in accordance with ASTM E1996 for Wind Zone 2 - Enhanced Protection for Large and Small Missile impact and pressure cycling at design wind pressure.
3. Water Penetration Resistance: No uncontrolled water on interior face, when tested in accordance with ASTM E331 at pressure differential of 8.00 lbf/sq ft.
4. Air Leakage: Maximum of 0.06 cu ft/min/sq ft of wall area, when tested in accordance with ASTM E283 at 6.24 pounds per square foot pressure differential across assembly.
5. Movement: Accommodate movement between storefront and perimeter framing and deflection of lintel, without damage to components or deterioration of seals.
6. Air Infiltration: Limit air infiltration through assembly to 0.06 cu ft/min/sq ft of wall area, measured at specified differential pressure across assembly in accordance with ASTM E283.
7. Condensation Resistance Factor: Measure in accordance with AAMA 1503 with 1 inch insulating glass installed.
8. Water Leakage: None, when measured in accordance with ASTM E331 at specified pressure differential.
9. System Internal Drainage: Drain to the exterior by means of a weep drainage network any water entering joints, condensation occurring in glazing channel, and migrating moisture occurring within system.
10. Air and Vapor Seal: Maintain continuous air barrier and vapor retarder throughout assembly, primarily in line with inside pane of glass and inner sheet of infill panel and heel bead of glazing compound.
11. Expansion/Contraction: Provide for expansion and contraction within system components caused by cycling temperature range of 170 degrees F over a 12 hour period without causing detrimental effect to system components, anchorages, and other building elements.

2.04 COMPONENTS

A. Aluminum Framing Members: Tubular aluminum sections, drainage holes and internal weep drainage system.
   1. Glazing stops: Flush.
   2. Cross-Section: As indicated on drawings.
   3. Structurally Reinforced Members: Extruded aluminum with internal reinforcement of structural steel member.

B. Glazing: As specified in Section 08 80 00.

2.05 MATERIALS

A. Extruded Aluminum: ASTM B221 (ASTM B221M).

B. Structural Steel Sections: ASTM A36/A36M; galvanized in accordance with requirements of ASTM A123/A123M.

C. Fasteners: Stainless steel.

D. Exposed Flashings: Aluminum sheet, 20 gage, 0.032 inch minimum thickness; finish to match framing members.

E. Concealed Flashings: Stainless steel, 26 gage, 0.0187 inch minimum thickness.

F. Sill Flashing Sealant: Elastomeric, silicone or polyurethane, compatible with flashing material.

G. Perimeter Sealant: Type 1 specified in Section 07 90 05. H. Perimeter Sealant: Type 1 specified in Section 07 92 00 I. Glass: As specified in Section 08 80 00.
   1. Glass in Exterior Framing: Type S-1.

J. Glazing Gaskets: Type to suit application to achieve weather, moisture, and air infiltration requirements.

K. Glazing Accessories: As specified in Section 08 80 00.

L. Touch-Up Primer for Galvanized Steel Surfaces: SSPC-Paint 20, zinc rich.

2.06 FINISHES

A. Superior Performing Organic Coatings: AAMA 2605 multiple coat, thermally cured polyvinylidene fluoride system.
   1. Polyvinylidene fluoride (PVDF) multi-coat thermoplastic fluoropolymer coating system, including minimum 70 percent PVDF color topcoat and minimum total dry film thickness of 0.9 mil; color and gloss as indicated on drawings.
      a. Products:
         1) Kawneer Permafluor: www.kawneer.com.
         2) PPG Metal Coatings; Duranar: www.ppgideascapes.com.
         3) Substitutions: See Section 01 60 00 - Product Requirements. B.

Color: As selected by Architect from manufacturer's standard range.

C. Touch-Up Materials: As recommended by coating manufacturer for field application.

2.07 FABRICATION

A. Fabricate components with minimum clearances and shim spacing around perimeter of assembly, yet enabling installation and dynamic movement of perimeter seal.

B. Accurately fit and secure joints and corners. Make joints flush, hairline, and weatherproof.

C. Prepare components to receive anchor devices. Fabricate anchors.

D. Coat concealed metal surfaces that will be in contact with cementitious materials or dissimilar metals with bituminous paint.

E. Arrange fasteners and attachments to conceal from view.

F. Reinforce framing members for imposed loads.

G. Finishing: Apply factory finish to all surfaces that will be exposed in completed assemblies.

1. Touch-up surfaces cut during fabrication so that no natural aluminum is visible in completed assemblies, including joint edges.

PART 3 EXECUTION 3.01 EXAMINATION

A. Verify dimensions, tolerances, and method of attachment with other work.

B. Verify that wall openings and adjoining air and vapor seal materials are ready to receive work of this section.

3.02 INSTALLATION

A. Install window wall system in accordance with manufacturer's instructions.

B. Attach to structure to permit sufficient adjustment to accommodate construction tolerances and other irregularities.

C. Provide alignment attachments and shims to permanently fasten system to building structure. D. Align assembly plumb and level, free of warp or twist. Maintain assembly dimensional tolerances, aligning with adjacent work.

E. Provide thermal isolation where components penetrate or disrupt building insulation.

F. Install sill flashings. Turn up ends and edges; seal to adjacent work to form water tight dam.

G. Where fasteners penetrate sill flashings, make watertight by seating and sealing fastener heads to sill flashing.

H. Coordinate attachment and seal of perimeter air and vapor barrier materials.

I. Pack fibrous insulation in shim spaces at perimeter of assembly to maintain continuity of thermal barrier.

J. Install hardware using templates provided.

K. Install glass and infill panels in accordance with Section 08 80 00, using glazing method required to achieve performance criteria.

L. Install perimeter sealant in accordance with Section 07 90 05.

M. Touch-up minor damage to factory applied finish; replace components that cannot be satisfactorily repaired.

3.03 TOLERANCES

A. Maximum Variation from Plumb: 0.06 inches every 3 ft non-cumulative or 1/16 inches per 10 ft, whichever is less.

B. Maximum Misalignment of Two Adjoining Members Abutting in Plane: 1/32 inch.

3.04 FIELD QUALITY CONTROL

A. See Section 01 40 00 - Quality Requirements, for independent testing and inspection requirements. Inspection will monitor quality of installation and glazing.

B. Test installed storefront for water penetration in accordance with ASTM E1105 with a uniform test pressure difference of 2.86 lbf/sq ft. Test shall include a minimum of 3 cycles, each lasting a minimum of 5 minutes.

3.05 CLEANING

A. Remove protective material from pre-finished aluminum surfaces.

B. Remove excess sealant by method acceptable to sealant manufacturer.

3.06 PROTECTION

A. Protect installed products from damage during subsequent construction.

END OF SECTION

SECTION 08 71 00 - DOOR HARDWARE

PART 1 GENERAL 1.01 SECTION INCLUDES

A. Hardware for hollow metal doors.

B. Thresholds.

C. Weatherstripping, seals and door gaskets.

1.02 RELATED REQUIREMENTS

A. Section 08 11 13 - Hollow Metal Doors and Frames.

1.03 REFERENCE STANDARDS

A. 36 CFR 1191 - Americans with Disabilities Act (ADA) Accessibility Guidelines for Buildings and Facilities; Architectural Barriers Act (ABA) Accessibility Guidelines; current edition.

B. ADA Standards - Americans with Disabilities Act (ADA) Standards for Accessible Design; 2010.

C. BHMA A156.1 - American National Standard for Butts and Hinges; Builders Hardware Manufacturers Association, Inc.; 2013 (ANSI/BHMA A156.1).

D. BHMA A156.2 - American National Standard for Bored and Preassembled Locks & Latches; Builders Hardware Manufacturers Association; 2011 (ANSI/BHMA A156.2).

E. BHMA A156.4 - American National Standard for Door Controls - Closers; Builders Hardware Manufacturers Association, Inc.; 2013 (ANSI/BHMA A156.4).

F. BHMA A156.7 - American National Standard for Template Hinge Dimensions; Builders Hardware Manufacturers Association; 2014 (ANSI/BHMA A156.7).

G. BHMA A156.8 - American National Standard for Door Controls - Overhead Stops and Holders; Builders Hardware Manufacturers Association, Inc.; 2010 (ANSI/BHMA A156.8).

H. BHMA A156.16 - American National Standard for Auxiliary Hardware; Builders Hardware Manufacturers Association; 2013 (ANSI/BHMA A156.16).

I. BHMA A156.18 - American National Standard for Materials and Finishes; Builders Hardware Manufacturers Association, Inc.; 2012 (ANSI/BHMA A156.18).

J. BHMA A156.21 - American National Standard for Thresholds; Builders Hardware Manufacturers Association; 2014 (ANSI/BHMA A156.21).

K. BHMA A156.22 - American National Standard for Door Gasketing and Edge Seal Systems, Builders Hardware Manufacturers Association; 2012 (ANSI/BHMA A156.22).

L. BHMA A156.115 - American National Standard for Hardware Preparation in Steel Doors and Steel Frames; 2014 (ANSI/BHMA A156.115).

M. ICC A117.1 - Accessible and Usable Buildings and Facilities; International Code Council; 2009 (ANSI).

N. UL (BMD) - Building Materials Directory; Underwriters Laboratories Inc.; current edition.

1.04 ADMINISTRATIVE REQUIREMENTS

A. Coordinate the manufacture, fabrication, and installation of products that door hardware will be installed upon.

B. Furnish templates for door and frame preparation to manufacturers and fabricators of products requiring internal reinforcement for door hardware.

C. Convey Owner's keying requirements to manufacturers.

D. Sequence installation to ensure utility connections are achieved in an orderly and expeditious manner.

1.05 SUBMITTALS

A. See Section 01 30 00 - Administrative Requirements, for submittal procedures.

B. Product Data: Manufacturer's catalog literature for each type of hardware, marked to clearly show products to be furnished for this project.

C. Hardware Schedule: Detailed listing of each item of hardware to be installed on each door. Use door numbering scheme as included in the Contract Documents. Identify electrically operated items and include power requirements.

D. Keying Schedule: Submit for approval of Owner.

E. Manufacturer's Installation Instructions: Indicate special procedures, perimeter conditions requiring special attention.

F. Maintenance Data: Include data on operating hardware, lubrication requirements, and inspection procedures related to preventative maintenance.
   1. Submit manufacturer's parts lists and templates.
   2. Bitting List: List of combinations as furnished.

G. Keys: Deliver with identifying tags to Owner by security shipment direct from hardware supplier.

H. Warranty: Submit manufacturer's warranty and ensure that forms have been completed in Owner's name and registered with manufacturer.

I. Maintenance Materials and Tools: Furnish the following for Owner's use in maintenance of project.
   1. See Section 01 60 00 - Product Requirements, for additional provisions.
   2. Tools: One set of all special wrenches or tools applicable to each different or special hardware component, whether supplied by the hardware component manufacturer or not.

1.06 QUALITY ASSURANCE

A. Manufacturer Qualifications: Company specializing in manufacturing the products specified in this section with minimum three years of documented experience.

B. Hardware Supplier Qualifications: Company specializing in supplying commercial door hardware with three years of experience.

C. Hardware Supplier Personnel: Employ an Architectural Hardware Consultant (AHC) to assist in the work of this section.

1.07 DELIVERY, STORAGE, AND HANDLING

A. Package hardware items individually; label and identify each package with door opening code to match hardware schedule.

1.08 WARRANTY

A. See Section 01 78 00 - Closeout Submittals, for additional warranty requirements.

B. Provide five year warranty for door closers.

PART 2 PRODUCTS 2.01 MANUFACTURERS

A. Allegion Brands; Ives, LCN, Schlage, Steelcraft, or Von Duprin: www.allegion.com/us. B. Assa Abloy Brands; Corbin Russwin, Curries, McKinney, Norton, Sargent, or Yale: www.assaabloydss.com.

C. Best Access Systems, division of Stanley Security Solutions: www.bestaccess.com.

D. C. R. Laurence Co., Inc: www.crl-arch.com.

E. DORMA USA, Inc: www.dorma.com.

F. Hager Companies: www.hagerco.com.

G. Hiawatha, Inc, division of Activar Construction Products Group, Inc: www.activarcpg.com/hiawatha.

H. Trimco, originally called Triangle Brass Manufacturing Co., Inc: www.trimcohardware.com.

I. Substitutions: See Section 01 60 00 - Product Requirements.

2.02 MANUFACTURERS - BASIS OF DESIGN

A. As specified in this section for other products.

B. Substitutions: See Section 01 60 00 - Product Requirements.

2.03 DOOR HARDWARE - GENERAL

A. Provide hardware specified or required to make doors fully functional, compliant with applicable codes, and secure to the extent indicated.

B. Provide items of a single type of the same model by the same manufacturer. C.

Provide products that comply with the following:

1. Applicable provisions of federal, state, and local codes.
2. Accessibility: ADA Standards and ICC A117.1.
3. Auxiliary Hardware: BHMA A156.16.
4. Hardware Preparation for Steel Doors and Steel Frames: BHMA A156.115.
5. Products Requiring Electrical Connection: Listed and classified by UL as suitable for the purpose specified and indicated.

D. Function: Lock and latch function numbers and descriptions of manufactures series as listed in hardware schedule.

E. Finishes: Identified in schedule.

F. Finishes: Provide door hardware of the same finish unless otherwise indicated.
1. Primary Finish: Satin chrome plated over nickel on brass or bronze, 626 (approx US26D).
2. Secondary Finish: Satin chrome plated over nickel on brass or bronze, 626 (approx US26D).
   a. Use secondary finish in kitchens, bathrooms, and other spaces containing chrome or stainless steel finished appliances, fittings, and equipment; provide primary finish on one side of door and secondary finish on other side if necessary.
3. Finish Definitions: BHMA A156.18.
4. Exceptions:
   a. Where base metal is specified to be different, provide finish that is an appearance equivalent according to BHMA A156.18.
   b. Door Closer Covers and Arms: Color to be selected by Architect from manufacturer's standard colors.
   c. Hardware for Aluminum Storefront Doors: Finished to match door, except hand contact surfaces to be satin stainless steel.

G. Fasteners:
1. Concrete and Masonry Substrates: Stainless steel machine screws and lead expansion shields.

2.04 LOCKS AND LATCHES

A. Locks: Provide a lock for every door, unless specifically indicated as not requiring locking.
1. If no hardware set is indicated for a swinging door provide an office lockset.
2. Trim: Provide lever handle or pull trim on outside of all locks unless specifically stated to have no outside trim.
3. Lock Cylinders: Provide key access on outside of all locks unless specifically stated to have no locking or no outside trim.
4. In door sections, where a lock cylinder referenced to this Section is specified, furnish and install a mortise lock cylinder keyed to the building keying system.

B. Lock Cylinders: Manufacturer’s standard tumbler type, six-pin standard core.
1. Provide cams and/or tailpieces as required for locking devices required. C. Keying: Grand master keyed.

1. Include construction keying.
2. Key to existing keying system.

3. Supply keys in the following quantities:
   a. 2 master keys.
   b. 2 grand master keys.
   c. 2 construction keys.
   d. 2 change keys for each lock.
4. When providing keying information, comply with DHI Handbook "Keying systems and nomenclature".

D. Latches: Provide a latch for every door that is not required to lock, unless specifically indicated "push/pull" or "not required to latch".

2.05 HINGES

A. Hinges: Provide hinges on every swinging door.
   1. Provide five-knuckle full mortise butt hinges unless otherwise indicated.
   2. Provide ball-bearing hinges at all doors having closers.
   3. Provide hinges in the quantities indicated.
   4. Provide non-removable pins on exterior outswinging doors.
   5. Where electrified hardware is mounted in door leaf, provide power transfer hinges.

B. Butt Hinges: Comply with BHMA A156.1 and A156.7; heavy weight, unless otherwise indicated.
   1. Provide hinge width required to clear surrounding trim. C. Quantity of Hinges Per Door:
      1. Doors From 60 inches High up to 90 inches High: Three hinges.
      2. Doors 90 inches High up to 120 inches High: Four hinges.
      3. Doors over 120 inches High: One additional hinge per each additional 30 inches in height.
      4. Dutch Doors: Two hinges each leaf. D. Manufacturers - Hinges:

1. Assa Abloy Brands; McKinney: www.assaabloydss.com.
2. Bommer Industries, Inc: www.bommer.com.
3. C. R. Laurence Co., Inc; www.crl-arch.com.
4. Hager Companies: www.hagerco.com.
5. Stanley Black & Decker: www.stanleyblackanddecker.com.
6. Substitutions: See Section 01 60 00 - Product Requirements.

2.06 LOCKS AND LATCHES

A. Locks: Provide a lock for every door, unless specifically indicated as not requiring locking.
   1. Hardware Sets indicate locking functions required for each door.
   2. If no hardware set is indicated for a swinging door provide an office lockset.
   3. Trim: Provide lever handle or pull trim on outside of all locks unless specifically stated to have no outside trim.
   4. Lock Cylinders: Provide key access on outside of all locks unless specifically stated to have no locking or no outside trim.

B. Lock Cylinders: Manufacturer’s standard tumbler type, six-pin standard core.
   1. Provide cams and/or tailpieces as required for locking devices required. C. Keying: Grand master keyed.

D. Latches: Provide a latch for every door that is not required to lock, unless specifically indicated "push/pull" or "not required to latch".

2.07 CYLINDRICAL LOCKSETS

A. Cylindrical Locksets - Basis of Design: Best Access Systems, Cylindrical Locks 9K Series. B. Locking Functions: As defined in BHMA A156.2, and as follows.
   1. Always-Locked: F86, key required to lock, may not be left unlocked.

C. Manufacturers - Cylindrical Locksets:

1. Assa Abloy Brands; Corbin Russwin, Sargent, or Yale: www.assaabloydss.com.
2. Best Access Systems, division of Stanley Security Solutions: www.bestaccess.com.
3. DORMA USA, Inc.; C300 Series, C500 Series, C800 Series, CL700 Series, and CK700 Series: www.dorma.com.
4. Schlage, an Allegion brand: www.allegion.com/us.
5. Substitutions: See Section 01 60 00 - Product Requirements.

2.08 CLOSERS

A. Closers - Basis of Design: Stanley D4550 Institutional Door Closer. B.

Closers: Complying with BHMA A156.4.

1. Provide surface-mounted, door-mounted closers unless otherwise indicated.
2. Provide a door closer on every exterior door.
3. Provide a door closer on every fire- and smoke-rated door. Spring hinges are not an acceptable self-closing device unless specifically so indicated.
4. On pairs of swinging doors, if an overlapping astragal is present, provide coordinator to ensure the leaves close in proper order. C. Manufacturers - Surface Mounted Closers:
   1. Assa Abloy Brands; Corbin Russwin, Norton, Rixson, Sargent, or Yale: www.assaabloydss.com.
   2. DORMA USA, Inc.; 8900 Series: www.dorma.com.
   3. LCN, an Allegion brand: www.allegion.com/us.
   4. Stanley Security Solutions, Stanley D4550 Institutional Door Closer.
   5. Substitutions: See Section 01 60 00 - Product Requirements. D. Manufacturers -

Overhead Concealed Closers:

1. DORMA USA, Inc.; 8900: www.dorma.com.

2.09 STOPS AND HOLDERS

A. Stops: Complying with BHMA A156.8; provide a stop for every swinging door, unless otherwise indicated.
   1. Provide wall stops, unless otherwise indicated.
   2. If wall stops are not practical, due to configuration of room or furnishings, provide overhead stop.
   3. Stop is not required if positive stop feature is specified for door closer; positive stop feature of door closer is not an acceptable substitute for a stop unless specifically so stated.

B. Wall Stops: Ives #WS445.

2.10 GASKETING AND THRESHOLDS

A. Gaskets: Complying with BHMA A156.22.
   1. On each exterior door, provide weatherstripping gaskets, unless otherwise indicated; top, sides, and meeting stiles of pairs.
      a. Where exterior door is also required to have fire or smoke rating, provide gaskets functioning as both smoke and weather seals.
   2. On each exterior door, provide door bottom sweep, unless otherwise indicated.

B. Thresholds: Complying with BHMA A156.21.

1. At each exterior door, provide a threshold unless otherwise

indicated. C. Fasteners At Exterior Locations: Non-corroding. D. Manufacturers

- Gasketing and Thresholds:

1. Assa Abloy Brands; McKinney: www.assaabloydss.com.
2. Hager Companies: www.hagerco.com.
3. National Guard Products, Inc: www.ngpinc.com.
4. Pemko Manufacturing Co: www.pemko.com.
5. Zero International, Inc: www.zerointernational.com.

PART 3 EXECUTION 3.01 EXAMINATION

A. Verify that doors and frames are ready to receive work; labeled, fire-rated doors and frames are present and properly installed, and dimensions are as indicated on shop drawings. **3.02 INSTALLATION**

A. Install hardware in accordance with manufacturer's instructions and applicable codes.

B. Use templates provided by hardware item manufacturer.

C. Mounting heights for hardware from finished floor to center line of hardware item.
   1. Locksets: 38 inch.

D. Set exterior door thresholds with full-width bead of elastomeric sealant on each point of contact with floor providing a continuous weather seal; anchor thresholds with stainless steel countersunk screws.

3.03 ADJUSTING

A. Adjust work under provisions of Section 01 70 00.

B. Adjust hardware for smooth operation.

C. Adjust gasketing for complete, continuous seal; replace if unable to make complete seal.

3.04 CLEANING

A. Clean adjacent surfaces soiled by hardware installation. Clean finished hardware per manufacturer's instructions after final adjustments has been made. Replace items that cannot be cleaned to manufacturer's level of finish quality at no additional cost.

3.05 PROTECTION

A. Protect finished Work under provisions of Section 01 70 00.

B. Do not permit adjacent work to damage hardware or finish.

HARDWARE SETS 4.01 HARDWARE SETS - GENERAL

A. These Hardware Sets indicate requirements for single doors of that type, with conditional requirements for pairs and other situations.

4.02 SWING DOORS -- MAY NOT BE LEFT UNLOCKED

A. HW-30: Always-Locked, Non-Fire-Rated: Vault Entrance.
   1. Lockset, Always-Locked.
   2. Hinges: Stanley #CB199 Heavy weight, stainless steel, five knuckle, ball bearing.
   3. Closer: Stanley #D4550.
   4. Weatherstrip: Pemko #S44
   5. Threshold: Pemko #2001AP

END OF SECTION

SECTION 08 80 00 - GLAZING

PART 1 GENERAL

1.01 SECTION INCLUDES A.

Glass.

B. Glazing gaskets, compounds and accessories.

1.02 RELATED REQUIREMENTS

A. Section 07 25 00 - Weather Barriers.

B. Section 07 90 05 - Joint Sealers: Sealant and back-up material.

C. Section 08 43 13 - Aluminum-Framed Storefronts: Glazing furnished by storefront manufacturer.

D. Section 08 51 13 - Aluminum Windows: Glazing furnished by window manufacturer.

E. Section 08 63 00 - Metal-Framed Skylights: Glazing furnished by skylight manufacturer.

F. Section 10 28 00 - Toilet and Bath Accessories: Mirrors.

1.03 REFERENCE STANDARDS

A. 16 CFR 1201 - Safety Standard for Architectural Glazing Materials; current edition.

B. ASTM C1036 - Standard Specification for Flat Glass; 2011e1.

C. ASTM C1048 - Standard Specification for Heat-Strengthened and Fully Tempered Flat Glass; 2012.

D. ASTM C1172 - Standard Specification for Laminated Architectural Flat Glass; 2014.

E. ASTM E1300 - Standard Practice for Determining Load Resistance of Glass in Buildings; 2012a.

F. GANA (GM) - GANA Glazing Manual; Glass Association of North America; 2009.

G. GANA (SM) - GANA Sealant Manual; Glass Association of North America; 2008.

H. GANA (LGRM) - Laminated Glazing Reference Manual; Glass Association of North America; 2009.

I. NYC - Building Code of the City of New York: 2014.

J. IGMA TM-3000 - North American Glazing Guidelines for Sealed Insulating Glass Units for Commercial & Residential Use; Insulating Glass Manufacturers Alliance; 1990 (2004).

1.04 ADMINISTRATIVE REQUIREMENTS

A. Preinstallation Meeting: Convene a preinstallation meeting one week before starting work of this section; require attendance by all affected installers.

1.05 SUBMITTALS

A. See Section 01 30 00 - Administrative Requirements, for submittal procedures.

B. Product Data on Glass Types: Provide structural, physical and environmental characteristics, size limitations, special handling or installation requirements.

C. Samples: Submit two samples 12 by 12 inch in size of glass units.

D. Samples: Submit 2 inch long bead of glazing sealant, color as selected.

E. Certificates: Certify that products meet or exceed specified requirements.

F. Manufacturer's Certificate: Certify that laminated glass meets or exceeds specified requirements.

1.06 QUALITY ASSURANCE

A. Perform Work in accordance with GANA Glazing Manual and FGMA Sealant Manual for glazing installation methods. Maintain one copy on site.

B. Installer Qualifications: Company specializing in performing the work of this section with minimum three years documented experience.

1.07 MOCK-UP

A. See Section 01 40 00 - Quality Requirements, for additional mock-up requirements.

B. Provide mock-up of typical storefront module including glass.

C. Locate where directed by Architect.

D. Mock-up may remain as part of the Work.

1.08 FIELD CONDITIONS

A. Do not install glazing when ambient temperature is less than 50 degrees F.

B. Maintain minimum ambient temperature before, during and 24 hours after installation of glazing compounds.

1.09 WARRANTY

A. See Section 01 78 00 - Closeout Submittals, for additional warranty requirements.

B. Sealed Insulating Glass Units: Provide a ten (10) year warranty to include coverage for seal failure, interpane dusting or misting, including replacement of failed units.

C. Decorative Plastic Glazing Film: Warranty Period: 10 years from date of original installation.

PART 2 PRODUCTS 2.01 GLAZING UNITS

A. Type S-1 - Single Vision Glazing:
   1. Application: All exterior storefront glazing.
   2. Type: Laminated float glass.
   3. Tint: Clear.
   4. Thickness: 1/4 inch.

2.02 EXTERIOR GLAZING ASSEMBLIES

A. Performance Criteria: Select type and thickness of glass to withstand dead and live loads caused by positive and negative wind pressure acting normal to plane of glass.
   1. Design Pressure: Calculated in accordance with applicable codes.
   2. Comply with ASTM E1300 for design load resistance of glass type, thickness, dimensions, and maximum lateral deflection of supported glass.
   3. Provide glass edge support system sufficiently stiff to limit the lateral deflection of supported glass edges to less than 1/175 of their lengths under specified design load.
   4. Use the procedure specified in ASTM E1300 to determine glass type and thickness.
   5. Limit glass deflection to 1/200 or flexure limit of glass, whichever is less, with full recovery of glazing materials.
   6. Glass thicknesses listed are minimum.

B. Air and Vapor Seals: Provide completed assemblies that maintain continuity of building enclosure vapor retarder and air barrier:
   1. In conjunction with vapor retarder and joint sealer materials described in other sections.
   2. To maintain a continuous air barrier and vapor retarder throughout the glazed assembly from glass pane to heel bead of glazing sealant.

2.03 GLASS MATERIALS

A. Float Glass Manufacturers:
   1. AGC Glass Company North America, Inc: www.us.agc.com.
   2. Cardinal Glass Industries: www.cardinalcorp.com.
   3. Guardian Industries Corp: www.sunguardglass.com.
   4. Old Castle Glass: oldcastlebe.com
   5. Pilkington North America Inc: www.pilkington.com/na.

6. PPG Industries, Inc: www.ppg.com.
7. Viracon: www.viracon.com.
8. Substitutions: Refer to Section 01 60 00 - Product Requirements. B. Float Glass: Provide float glass based glazing unless noted otherwise.

1. Annealed Type: ASTM C1036, Type I - Transparent Flat, Class 1 - Clear, Quality-Q3.
2. Heat-Strengthened and Fully Tempered Types: ASTM C1048, Kind HS and Kind FT.
3. Thicknesses: As indicated; for exterior glazing comply with requirements indicated for wind load design regardless of thickness indicated.

C. Laminated Glass: Float glass laminated in accordance with ASTM C1172.
1. Laminated Safety Glass: Comply with 16 CFR 1201 test requirements for Category II.
2. Plastic Interlayer:
   a. Polyvinyl Butyral (PVB) Interlayer: 0.030 inch thick, minimum.
3. Manufacturers:
   a. AGC Flat Glass North America, Inc: www.na.agc-flatglass.com.
   b. Cardinal Glass Industries: www.cardinalcorp.com.
   c. Viracon, Architectural Glass segment of Apogee Enterprises, Inc: www.viracon.com.
   d. Substitutions: Refer to Section 01 60 00 - Product Requirements.

2.04 GLAZING ACCESSORIES

A. Setting Blocks: Neoprene, 80 to 90 Shore A durometer hardness; ASTM C864 Option II. Length of 0.1 inch for each square foot of glazing or minimum 4 inch x width of glazing rabbet space minus 1/16 inch x height to suit glazing method and pane weight and area.

B. Spacer Shims: Neoprene, 50 to 60 Shore A durometer hardness; ASTM C864 Option II. Minimum 3 inch long x one half the height of the glazing stop x thickness to suit application, self adhesive on one face.

C. Glazing Gaskets: Resilient replaceable EPDM rubber extruded shape to suit glazing channel retaining slot; ASTM C864 Option II; black color.

2.05 SOURCE QUALITY CONTROL

A. See Section 01 40 00 - Quality Requirements, for additional requirements.

B. Provide shop inspection and testing for all glass.

PART 3 EXECUTION 3.01 EXAMINATION

A. Verify that openings for glazing are correctly sized and within tolerance.

B. Verify that surfaces of glazing channels or recesses are clean, free of obstructions that may impede moisture movement, weeps are clear, and ready to receive glazing.

3.02 PREPARATION

A. Clean contact surfaces with solvent and wipe dry.

B. Seal porous glazing channels or recesses with substrate compatible primer or sealer.

3.03 INSTALLATION - EXTERIOR/INTERIOR DRY METHOD (GASKET GLAZING)

A. Place setting blocks at 1/4 points with edge block no more than 6 inch from corners.

B. Rest glazing on setting blocks and push against fixed stop with sufficient pressure on gasket to attain full contact.

C. Install removable stops without displacing glazing gasket; exert pressure for full continuous contact.

3.04 FIELD QUALITY CONTROL

A. Glass and Glazing product manufacturers to provide field surveillance of the installation of their products.

B. Monitor and report installation procedures and unacceptable conditions.

3.05 CLEANING

A. Remove glazing materials from finish surfaces.

B. Remove labels after Work is complete.

C. Clean glass and adjacent surfaces.

3.06 PROTECTION

A. After installation, mark pane with an 'X' by using removable plastic tape or paste; do not mark heat absorbing or reflective glass units.

3.07 SCHEDULE

A. Aluminum-Framed Storefront Glazing: Typical, exterior dry method, and glass thickness as required to comply with performance requirements indicated in Section 08 43 13. **END OF SECTION**

SECTION 09 90 00 - PAINTING AND COATING

PART 1 GENERAL 1.01 SECTION INCLUDES

A. Surface preparation.

B. Field application of paints, varnishes, and other coatings.

C. Materials for backpriming woodwork.

D. Scope: Finish all interior and exterior surfaces exposed to view, unless fully factory-finished and unless otherwise indicated, including the following:
   1. Both sides and edges of fiber cement backboards for electrical and telecom equipment before installing equipment.
   2. Mechanical and Electrical:
      a. In finished areas, paint all insulated and exposed pipes, conduit, boxes, insulated and exposed ducts, hangers, brackets, collars and supports, mechanical equipment, and electrical equipment, unless otherwise indicated.
      b. In finished areas, paint shop-primed items.
      c. Paint interior surfaces of air ducts and convector and baseboard heating cabinets that are visible through grilles and louvers with one coat of flat black paint to visible surfaces.
      d. Paint dampers exposed behind louvers, grilles, and convector and baseboard cabinets to match face panels.

E. Do Not Paint or Finish the Following Items:
   1. Items fully factory-finished unless specifically so indicated; materials and products having factory-applied primers are not considered factory finished.
   2. Items indicated to receive other finishes.
   3. Items indicated to remain unfinished.
   4. Fire rating labels, equipment serial number and capacity labels, and operating parts of equipment.
   5. Non-metallic roofing and flashing.
   6. Stainless steel, prefinished aluminum, bronze, and copper items.
   7. Marble, granite, slate, and other natural stones.
   8. Floors, unless specifically so indicated.
   9. Ceramic and other tiles.
   10. Stone, architectural concrete, cast stone, integrally colored plaster and stucco.
   11. Glass.
   12. Concrete masonry in utility, mechanical, and electrical spaces.
   13. Concealed pipes, ducts, and conduits.

1.02 RELATED REQUIREMENTS

A. Section 01 35 15 - LEED Certification Procedures: LEED rating system definition.

B. Section 05 50 00 - Metal Fabrications: Shop-primed items.

C. Section 22 05 53 - Identification for Plumbing Piping and Equipment: Painted identification.

D. Section 23 05 53 - Identification for HVAC Piping and Equipment: Painted identification.

E. Section 26 05 53 - Identification for Electrical Systems: Painted identification. **1.03**

DEFINITIONS

A. Conform to ASTM D16 for interpretation of terms used in this section.

1.04 REFERENCE STANDARDS

A. 40 CFR 59, Subpart D - National Volatile Organic Compound Emission Standards for Architectural Coatings; U.S. Environmental Protection Agency; current edition.

B. ASTM D16 - Standard Terminology for Paint, Related Coatings, Materials, and Applications; 2012.

C. ASTM D4442 - Standard Test Methods for Direct Moisture Content Measurement of Wood and Wood-Base Materials; 2007.

D. SSPC (PM1) - Good Painting Practice: SSPC Painting Manual, Vol. 1; Society for Protective Coatings; Fourth Edition.

E. USGBC LEED-NC - LEED Green Building Rating System for New Construction and Major Renovations; U.S. Green Building Council; 2009.

1.05 SUBMITTALS

A. See Section 01 30 00 - Administrative Requirements, for submittal procedures.

B. Product Data: Provide complete list of all products to be used, with the following information for each:
   1. Manufacturer's name, product name and/or catalog number, and general product category (e.g. "alkyd enamel").
   2. Cross-reference to specified paint system(s) product is to be used in; include description of each system.
   3. Manufacturer's installation instructions.
   4. If proposal of substitutions is allowed under submittal procedures, explanation of all substitutions proposed.

C. Samples: Submit three paper "draw down" samples, 8-1/2 by 11 inches in size, illustrating range of colors available for each finishing product specified. 1. Where sheen is specified, submit samples in only that sheen.
   2. Where sheen is not specified, discuss sheen options with Architect before preparing samples, to eliminate sheens definitely not required.
   3. Allow 30 days for approval process, after receipt of complete samples by Architect.
   4. Paint color submittals will not be considered until color submittals for major materials not to be painted, such as masonry, have been approved.

D. Product Data: Provide data on all finishing products, including VOC content.

E. Samples: Submit two paper chip samples, 12 x 12 inch in size illustrating range of colors and textures available for each surface finishing product scheduled.

F. Samples: Submit two painted samples, illustrating selected colors and textures for each color and system selected with specified coats cascaded. Submit on tempered hardboard, 8-1/2 x 11 inch in size.

G. Certification: By manufacturer that all paints and coatings comply with VOC limits specified.

H. Manufacturer's Instructions: Indicate special surface preparation procedures.

I. Maintenance Data: Submit data including finish schedule showing where each product/color/finish was used, product technical data sheets, material safety data sheets (MSDS), care and cleaning instructions, touch-up procedures, repair of painted and coated surfaces, and color samples of each color and finish used.

J. Maintenance Data: Submit data on cleaning, touch-up, and repair of painted and coated surfaces.

K. Maintenance Materials: Furnish the following for Owner's use in maintenance of project.
   1. See Section 01 60 00 - Product Requirements, for additional provisions.
   2. Extra Paint and Coatings: As many gallons of each color to cover 10% of the painted surfaces; store where directed.
   3. Label each container with color in addition to the manufacturer's label.

1.06 QUALITY ASSURANCE

A. Manufacturer Qualifications: Company specializing in manufacturing the products specified, with minimum three years documented experience.
B. Applicator Qualifications: Company specializing in performing the type of work specified with minimum three years experience.

1.07 MOCK-UP

A. See Section 01 40 00 - Quality Requirements, for general requirements for mock-up.
B. Provide panel, 4 feet long by 4 feet wide, illustrating special coating color, texture, and finish.
C. Provide door and frame assembly illustrating paint coating color, texture, and finish.
D. Locate where directed.
E. Mock-up may remain as part of the work.

1.08 DELIVERY, STORAGE, AND HANDLING

A. Deliver products to site in sealed and labeled containers; inspect to verify acceptability.
B. Container Label: Include manufacturer's name, type of paint, brand name, lot number, brand code, coverage, surface preparation, drying time, cleanup requirements, color designation, and instructions for mixing and reducing.
C. Paint Materials: Store at minimum ambient temperature of 45 degrees F and a maximum of 90 degrees F, in ventilated area, and as required by manufacturer's instructions.

1.09 FIELD CONDITIONS

A. Do not apply materials when surface and ambient temperatures are outside the temperature ranges required by the paint product manufacturer.
B. Follow manufacturer's recommended procedures for producing best results, including testing of substrates, moisture in substrates, and humidity and temperature limitations.
C. Do not apply exterior coatings during rain or snow, or when relative humidity is outside the humidity ranges required by the paint product manufacturer.
D. Minimum Application Temperatures for Latex Paints: 45 degrees F for interiors; 50 degrees F for exterior; unless required otherwise by manufacturer's instructions.
E. Minimum Application Temperature for Varnish Finishes: 65 degrees F for interior or exterior, unless required otherwise by manufacturer's instructions.
F. Provide lighting level of 80 ft candles measured mid-height at substrate surface.

PART 2 PRODUCTS 2.01 MANUFACTURERS

A. Provide all paint and coating products used in any individual system from the same manufacturer; no exceptions.
B. Provide all paint and coating products from the same manufacturer to the greatest extent possible.
    1. In the event that a single manufacturer cannot provide all specified products, minor exceptions will be permitted provided approval by Architect is obtained using the specified procedures for substitutions.
    2. Substitution of other products by the same manufacturer is preferred over substitution of products by a different manufacturer.
    3. Substitution of a different paint system using MPI-approved products by the same manufacturer will be considered. C. Paints:
        1. Behr Process Corporation: www.behr.com.
        2. Benjamin Moore & Co: www.benjaminmoore.com.
        3. PPG Architectural Finishes, Inc: www.ppgaf.com.
        4. Pratt & Lambert Paints: www.prattandlambert.com.

5. Sherwin-Williams Company: www.sherwin-williams.com. D. Transparent

Finishes:

1. Samuel Cabot, Inc. www.cabotstain.com.
2. Minwax; www.minwax.com.
3. M.L.Campbell - Wood Finishing Systems, 800 3641359: www.mlcampbell. E.

Stains:

1. Base Manufacturer: Samual Cabot Inc.; 800-US-Stain; www.cabotstain.
2. Benjamin Moore & Co: www,benjaminmoore.com.
3. Olympic / PPG Architectural Finishes: www.olympic.com. F. Primer Sealers:

Same manufacturer as top coats.

G. Block Fillers: Same manufacturer as top coats.

H. Substitutions: Not permitted.

2.02 PAINTS AND COATINGS - GENERAL

A. Paints and Coatings: Ready mixed, unless intended to be a field-catalyzed coating.
   1. Provide paints and coatings of a soft paste consistency, capable of being readily and uniformly dispersed to a homogeneous coating, with good flow and brushing properties, and capable of drying or curing free of streaks or sags.
   2. Provide materials that are compatible with one another and the substrates indicated under conditions of service and application, as demonstrated by manufacturer based on testing and field experience.
   3. For opaque finishes, tint each coat including primer coat and intermediate coats, one-half shade lighter than succeeding coat, with final finish coat as base color.
   4. Supply each coating material in quantity required to complete entire project's work from a single production run.
   5. Do not reduce, thin, or dilute coatings or add materials to coatings unless such procedure is specifically described in manufacturer's product instructions.

B. Primers: As follows unless other primer is required or recommended by manufacturer of top coats; where the manufacturer offers options on primers for a particular substrate, use primer categorized as "best" by the manufacturer.
   1. Gypsum Board: Interior Latex Primer Sealer.
   2. Concrete: Alkali Resistant Water Based Primer; MPI #3.
   3. Wood: Latex Primer for Interior Wood.
   4. Wood: Interior Alkyd Primer Sealer.
   5. Steel, Uncoated: Anti-Corrosive Alkyd Primer for Metal.
   6. Steel, Uncoated: Interior Rust-Inhibitive Water Based Primer.
   7. Steel -- Shop Primer: Interior/Exterior Quick Dry Alkyd Primer for Metal; MPI #76.
   8. Galvanized Steel: Interior Water Based Galvanized Primer.
   9. Aluminum: Interior/Exterior Quick Dry Primer for Aluminum. C. Volatile Organic Compound (VOC) Content:

   1. Provide coatings that comply with the most stringent requirements specified in the following:
      a. 40 CFR 59, Subpart D--National Volatile Organic Compound Emission Standards for Architectural Coatings.
      b. Ozone Transport Commission (OTC) Model Rule, Architectural, Industrial, and Maintenance Coatings; www.otcair.org; specifically:
         1) Opaque, Flat: 50 g/L, maximum.
         2) Opaque, Nonflat: 150 g/L, maximum.
         3) Opaque, High Gloss: 250 g/L, maximum. 4) Varnishes: 350 g/L, maximum.
      c. Architectural coatings VOC limits of the State of New York.

2. Determination of VOC Content: Testing and calculation in accordance with 40 CFR 59, Subpart D (EPA Method 24), exclusive of colorants added to a tint base and water added at project site; or other method acceptable to authorities having jurisdiction. D. Chemical Content: The following compounds are prohibited:

1. Intentionally added methylene chloride or perchloroethylene.
2. Aromatic Compounds: In excess of 1.0 percent by weight of total aromatic compounds (hydrocarbon compounds containing one or more benzene rings).
3. Acrolein, acrylonitrile, antimony, benzene, butyl benzyl phthalate, cadmium, di (2-ethylhexyl) phthalate, di-n-butyl phthalate, di-n-octyl phthalate, 1,2-dichlorobenzene, diethyl phthalate, dimethyl phthalate, ethylbenzene, formaldehyde, hexavalent chromium, isophorone, lead, mercury, methyl ethyl ketone, methyl isobutyl ketone, methylene chloride, naphthalene, toluene (methylbenzene), 1,1,1-trichloroethane, vinyl chloride. E. Flammability: Comply with applicable code for surface burning characteristics.

F. Sheens: Provide the sheens specified; where sheen is not specified, sheen will be selected later by Architect from the manufacturer's full line. G. Colors: As indicated on drawings

1. Allow for minimum of seven colors for each system, unless otherwise indicated, without additional cost to Owner.
2. Extend colors to surface edges; colors may change at any edge as directed by Architect.
3. In finished areas, finish pipes, ducts, conduit, and equipment the same color as the wall/ceiling they are mounted on/under.
4. In utility areas, finish equipment, piping, conduit, and exposed duct work in colors according to the color coding scheme indicated.

2.03 PAINT SYSTEMS - EXTERIOR

A. Paint WE-TR-V - Wood, Transparent, Varnish, No Stain:

1. One coat sealer; Polyurethane varnish; Cabots Water-based Polyurethane Varnish #2201 Satin.
2. Satin: Two coats of polyurethane varnish; Cabots Water-based Polyurethane Varnish #2201 Satin..

B. Paint ME-OP-3L - Ferrous Metals, Unprimed, Latex, 3 Coat:

1. One coat of latex primer; Benjamin Moore Fresh Start Multi-Purpose Primer N023
2. Gloss: Two coats of latex enamel; Benjamin Moore Imprvex Latex High Gloss Enamel N309.
3. Semi-gloss: Two coats of latex enamel; Benjamin Moore Waterborne Satin Impervo 0314.

C. Paint ME-OP-2L - Ferrous Metals, Primed, Latex, 2 Coat:

1. Touch-up with rust-inhibitive primer recommended by top coat manufacturer.
2. Gloss: Two coats of latex enamel; Benjamin Moore Impervex Latex High Gloss Enamel N309.
3. Semi-gloss: Two coats of latex enamel; Benjamin Moore Waterborne Satin Impervo 0314.

D. Paint MgE-OP-3L - Galvanized Metals, Latex, 3 Coat:

1. One coat galvanize primer.
2. Gloss: Two coats of latex enamel; Benjamin Moore Impervex Latex High Gloss Enamel N309.
3. Semi-gloss: Two coats of latex enamel; Benjamin Moore Waterborne Satin Impervo 0314.

2.04 PAINT SYSTEMS - INTERIOR

A. Paint WI-TR-V - Wood, Transparent, Varnish, No Stain:

1. One coat sealer. Polyurethane varnish; Cabots Water-based Polyurethane Varnish # 2201 Satin.
2. Satin: Two coats of polyurethane varnish; Cabots Water-based Polyurethane Varnish # 2201 Satin.

B. Paint MI-OP-3L - Ferrous Metals, Unprimed, Latex, 3 Coat:

1. One coat of latex primer; Benjamin Moore IronClad Latex Low Luster Metal and Wood Enamel 363.
2. Gloss: Two coats of latex enamel; Benjamin Moore Impervex Latex HighGloss Metal and Wood Enamel 309.
3. Semi-gloss: Two coats of latex enamel; Benjamin Moore Regal Semi-Gloss Finish N333.

C. Paint MI-OP-2L - Ferrous Metals, Primed, Latex, 2 Coat:

1. Touch-up with latex primer.
2. Gloss: Two coats of latex enamel; Benjamin Moore Impervex Latex High Gloss Metal and Wood Enamel 309;.
3. Semi-gloss: Two coats of latex enamel; Benjamin Regal Semi-Gloss Finish N333;. D.

Paint MgI-OP-3L - Galvanized Metals, Latex, 3 Coat:

1. One coat galvanize primer.
2. Gloss: Two coats of latex enamel; Benjamin Moore Impervex Latex High Gloss Metal and Wood Enamel 309;.
3. Semi-gloss: Two coats of latex enamel; Benjamin Moore Regal Semi-Gloss Finish n333.

E. Paint FI-OP-2A - Fabrics/Insulation Jackets, Alkyd, 2 Coat:

1. One coat of alkyd primer sealer.
2. Semi-gloss: One coat of alkyd enamel; Benjamin Moore Alkyd Dulamel Enamel C207;.

2.05 ACCESSORY MATERIALS

A. Accessory Materials: Provide all primers, sealers, cleaning agents, cleaning cloths, sanding materials, and clean-up materials required to achieve the finishes specified whether specifically indicated or not; commercial quality. B. Patching Material: Latex filler.

C. Fastener Head Cover Material: Latex filler.

PART 3 EXECUTION 3.01 EXAMINATION

A. Do not begin application of coatings until substrates have been properly prepared.

B. Verify that surfaces are ready to receive work as instructed by the product manufacturer. C. Examine surfaces scheduled to be finished prior to commencement of work. Report any condition that may potentially affect proper application.

D. If substrate preparation is the responsibility of another installer, notify Architect of unsatisfactory preparation before proceeding.

E. Test shop-applied primer for compatibility with subsequent cover materials.

F. Measure moisture content of surfaces using an electronic moisture meter. Do not apply finishes unless moisture content of surfaces are below the following maximums:
   1. Interior Wood: 15 percent, measured in accordance with ASTM D4442.
   2. Exterior Wood: 15 percent, measured in accordance with ASTM D4442.

3.02 PREPARATION

A. Clean surfaces thoroughly and correct defects prior to coating application.

B. Prepare surfaces using the methods recommended by the manufacturer for achieving the best result for the substrate under the project conditions.

C. Remove surface appurtenances, including electrical plates, hardware, light fixture trim, escutcheons, and fittings, prior to preparing surfaces or finishing.

D. Seal surfaces that might cause bleed through or staining of topcoat.

E. Remove mildew from impervious surfaces by scrubbing with solution of tetra-sodium phosphate and bleach. Rinse with clean water and allow surface to dry.

F. Insulated Coverings to be Painted: Remove dirt, grease, and oil from canvas and cotton.

G. Galvanized Surfaces to be Painted: Remove surface contamination and oils and wash with solvent. Apply coat of etching primer.

H. Corroded Steel and Iron Surfaces to be Painted: Prepare using at least SSPC-SP 2 (hand tool cleaning) or SSPC-SP 3 (power tool cleaning) followed by SSPC-SP 1 (solvent cleaning).

I. Uncorroded Uncoated Steel and Iron Surfaces to be Painted: Remove grease, mill scale, weld splatter, dirt, and rust. Where heavy coatings of scale are evident, remove by hand wire brushing or sandblasting; clean by washing with solvent. Apply a treatment of phosphoric acid solution, ensuring weld joints, bolts, and nuts are similarly cleaned. Prime paint entire surface; spot prime after repairs.

J. Shop-Primed Steel Surfaces to be Finish Painted: Sand and scrape to remove loose primer and rust. Feather edges to make touch-up patches inconspicuous. Clean surfaces with solvent. Prime bare steel surfaces.

K. Interior Wood Surfaces to Receive Transparent Finish: Wipe off dust and grit prior to sealing, seal knots, pitch streaks, and sappy sections with sealer. Fill nail holes and cracks after sealer has dried; sand lightly between coats. Prime concealed surfaces with gloss varnish reduced 25 percent with thinner.

L. Exterior Wood to Receive Transparent Finish: Remove dust, grit, and foreign matter; seal knots, pitch streaks, and sappy sections with sealer. Fill nail holes with tinted exterior calking compound after sealer has been applied. Prime concealed surfaces.

M. Metal Doors to be Painted: Prime metal door top and bottom edge surfaces.

3.03 APPLICATION

A. Remove unfinished louvers, grilles, covers, and access panels on mechanical and electrical components and paint separately.

B. Apply products in accordance with manufacturer's instructions.

C. Where adjacent sealant is to be painted, do not apply finish coats until sealant is applied.

D. Do not apply finishes to surfaces that are not dry. Allow applied coats to dry before next coat is applied.

E. Apply each coat to uniform appearance.

F. Dark Colors and Deep Clear Colors: Regardless of number of coats specified, apply as many coats as necessary for complete hide.

G. Sand wood and metal surfaces lightly between coats to achieve required finish.

H. Vacuum clean surfaces of loose particles. Use tack cloth to remove dust and particles just prior to applying next coat.

I. Wood to Receive Transparent Finishes: Tint fillers to match wood. Work fillers into the grain before set. Wipe excess from surface.

J. Reinstall electrical cover plates, hardware, light fixture trim, escutcheons, and fittings removed prior to finishing.

3.04 FIELD QUALITY CONTROL

A. See Section 01 40 00 - Quality Requirements, for general requirements for field inspection. B. Inspect and test questionable coated areas in accordance with these specifications and reference standards.

3.05 CLEANING

A. Collect waste material that could constitute a fire hazard, place in closed metal containers, and remove daily from site.

3.06 PROTECTION

A. Protect finished coatings until completion of project.

B. Touch-up damaged coatings after Substantial Completion.

3.07 SCHEDULE - PAINT SYSTEMS

A. Wood: Finish all surfaces exposed to view.

1. Exterior wood glue laminated structure and heavy timber framing: WE TR V.
2. Exteror wood deck soffit: WE TR V.
3. Interior wood glue laminated structure and heavy timber framing: WI TR V.
4. Interor wood deck soffit: WI TR V.

B. Steel Doors and Frames: Finish all surfaces exposed to view..
1. Exterior: MgE-OP-3A, semi-gloss.
2. Interior: MI-OP-3L, semi-gloss.

END OF SECTION

DIVISION 26 - ELECTRICAL INDEX

SECTION NUMBER	SECTION NAME
SECTION 26 05 00	COMMON WORK RESULTS FOR ELECTRICAL
SECTION 26 05 19	LOW-VOLTAGE ELECTRICAL POWER CONDUCTORS AND CABLES
SECTION 26 05 26	GROUNDING AND BONDING FOR ELECTRICAL SYSTEMS
SECTION 26 05 29	HANGERS AND SUPPORTS FOR ELECTRICAL SYSTEMS
SECTION 26 05 33	RACEWAYS AND BOXES FOR ELECTRICAL SYSTEMS
SECTION 26 05 44	SLEEVES AND SLEEVE SEALS FOR ELECTRICAL RACEWAYS AND CABLING
SECTION 26 05 53	IDENTIFICATION FOR ELECTRICAL SYSTEMS
SECTION 26 08 00	ELECTRICAL TESTING
SECTION 26 09 23	LIGHTING CONTROL DEVICES
SECTION 26 20 01	FEEDERS AND BRANCH CIRCUITRY
SECTION 26 22 00	LOW-VOLTAGE TRANSFORMERS
SECTION 26 24 13	SWITCHBOARDS
SECTION 26 24 16	PANELBOARDS
SECTION 26 27 13	ELECTRICITY METERING (UTILITY)
SECTION 26 27 26	WIRING DEVICES
SECTION 26 28 13	FUSES
SECTION 26 28 16	ENCLOSED SWITCHES AND CIRCUIT BREAKERS
SECTION 26 43 13	SURGE PROTECTIVE DEVICES (SPDS) - 1 KV OR LESS
SECTION 26 51 00	LIGHTING

X:\Specs\140143\260000 master electrical index.doc

SECTION 26 05 00 - COMMON WORK RESULTS FOR ELECTRICAL

PART 1 - GENERAL

1.1 SECTION INCLUDES

A. This Section includes general administrative and procedural requirements for Electrical installations. The administrative and procedural requirements specified herein are included in this Section to expand the requirements specified in Division 01.

1.2 RELATED DOCUMENTS

A. This section is a part of each Division 26 Section. Include the following paragraph for projects with utility company or other rebate funding available.

1.3 SUBMITTALS

A. Prior to purchasing any equipment or materials, a list of their manufacturers shall be submitted for review.

B. Prior to assembling or installing the work, the following shall be submitted for review:

1. Scale drawings indicating insert and sleeve locations.

2. Scale drawings showing all cable trays, major conduit duct banks, individual conduit runs of 2 ½ inch and larger with sizes, elevations and appropriate indication of coordination with other trades. This submission to us shall consist of an electronic file submittal and 2 paper prints.

3. Catalog information, factory assembly drawings and field installation drawings as required for a complete explanation and description of all items of equipment.

4. Coordination drawings for access panel and door locations. C. Documents will not be

accepted for review unless:

1. They include complete information pertaining to appurtenances and accessories.

2. They are submitted as a package where they pertain to related items.

3. They are properly marked with service or function, project name, where they consist of catalog sheets displaying other items which are not applicable.

4. They indicate the project name and address along with the Contractor's name, address and phone number.

5. They are properly marked with external connection identification as related to the project where they consist of standard factory assembly or field installation drawings.

D. Shop Drawing Review

1. The purpose of the review of shop drawings is to maintain integrity of the design. Unless the contractor clearly points out changes, substitutions, deletions or any other differences between the submission and the Contract Documents in writing on the

Contractor's letterhead, review by the Engineer or Architect does not constitute acceptance. It is not to be assumed that the engineer has read the text nor reviewed the technical data of a manufactured item and its components including where the Vendor has pointed out differences between his product and the specified model.

2. It is the responsibility of the contractor to confirm all dimensions, quantities, and the coordination of materials and products supplied by him with other trades. Review of shop drawings containing errors does not relieve the contractor from making corrections at his expense.

3. Substitutions of equipment, systems, materials, temperature controls must be coordinated by the Contractor with his own or other trades which may be involved with the item, such as, but not limited to, equipment substitutions which change electrical requirements, or hanging or support weights or dimensions.

4. Any extra changes or credits which may be generated by other trades due to substitutions will not be accepted unless the Contractor has an agreement in writing with the Owner.

5. Proposed substitutions shall be in accordance with the requirements of the section governing substitutions. Substitutions of equipment, systems, etc. requiring approval of local authorities must comply with such regulations and be filed at the expense of the Contractor (should filing be necessary). Substitutions are subject to approval or disapproval by the Engineer. The contractor in offering substitutions shall hold the Owner and Engineer harmless if the substituted item is an infringement of patent held by the specified item.

E. Explanation of Shop Drawing Stamp

1. Reviewed - No Exception Taken: indicates that we have not found any reason why this item should not be acceptable within the intent of the contract documents.

2. Exception Taken As Noted: indicates that we have found questionable components which if corrected or otherwise explained make the product acceptable.

3. Revised and Resubmit: indicates that this item should be resubmitted for review before further processing.

4. Resubmit Specified Item: indicates that the item will not meet the intent of the Contract.

5. Incomplete - Resubmit: Indicates that the submission is not complete and ready for review by the Architect or Engineer.

6. Verified for Electrical Services: Indicates that the electrical requirements has been confirmed with the electrical contract documents.

7. Architects Review Required: Indicates that the submission will required the Architects review.

8. Structural Review Required: Indicates that the submission will require the Structural Engineer’s review.

9. Acoustical Consultant Review Required: Indicates that the submission will require the acoustical consultant’s review.

10. No shop drawing stamp or note shall constitute an order to fabricate or ship. Such notification can only be performed by the Project Manager for Construction, the Contractor scheduling his own work, or the Owner.

11. The Contractor is responsible for having "Reviewed" copies of shop drawings bearing the Reviewed - No Exception Taken stamp of the Architect/Engineer or Owner's Consultant are kept on the job site and work is implemented in the field in accordance with these documents.

12. Where information from one Contractor is required by another contractor, it is the responsibility of the contractors to exchange information and coordinate their work.

1.4 QUALITY ASSURANCE

A. Qualify welding processes and operators for structural steel according to AWS D1.1 “Structural Welding Code Steel” (where required) B. Products Criteria:

1. All equipment furnished as part of the work shall comply with the latest editions of all applicable state and municipal "energy codes." Provide certification from the equipment suppliers for all energy-consuming equipment that the equipment fully complies with these codes. Equipment submissions will not be accepted for review unless accompanied by such certification in writing.

2. All equipment and materials shall be new and without blemish or defect.

3. All products and equipment shall be tested and/or listed and labeled by approved agency, such as Underwriters Laboratories (UL), according to prescribed standard or by approved agency according to New York City Office of Technical Certification and Research (OTCR) approved criteria. It is the responsibility of this trade to demonstrate or obtain and pay for all costs and fees of such approval and, when applicable, to prepare and submit an alternative product application to OTCR for review and approval.

4. All equipment and materials shall be free of asbestos.

5. Electrical equipment and materials shall be products which will meet with the acceptance of the agency inspecting the electrical work. Where such acceptance is contingent upon having the products examined, tested and certified by Underwriters or other recognized testing laboratory, the product shall be examined, tested and certified.. Where no specific indication as to the type or quality of materials or equipment is indicated, a first class standard article shall be furnished.

6. It is the intent of these specifications that wherever a specific manufacturer of a product is specified or scheduled, and the specifications include other approved manufacturers or the terms "other approved" or "or approved equal" or "equal" are used, the submitted item must conform in all respects to the specified item. Consideration will not be given to claims that the submitted item meets the performance requirements with lesser construction (such as lesser heat exchange surface, smaller motor HP, etc.). Performance as delineated in schedules and in the specifications shall be interpreted as minimum performance. In many cases equipment is oversized to allow for pick-up loads which cannot be delineated under the minimum performance.

7. All equipment of one type (such as fans, pumps, coils, etc.), shall be the products of one Manufacturer.

8. Substituted equipment or optional equipment where permitted and approved, must conform to space requirements. Any substituted equipment that cannot meet space requirements, whether approved or not, shall be replaced at the Contractor's expense. Any modifications of related systems as a result of substitutions shall be made at the Contractor's expense.

9. Note that the approval of shop drawings, or other information submitted in accordance with the requirements hereinbefore specified, does not assure that the Engineer, Architect, or any other Owner's Representative, attests to the dimensional accuracy or dimensional suitability of the material or equipment involved or the ability of the material or equipment involved or the mechanical performance of equipment. Approval of Shop Drawings does not invalidate the plans and specifications if in conflict, unless a letter requesting such change is submitted and approved on the Engineer's letterhead.

10. Substitutions of Electrical Equipment for that shown on the schedules or designated by model number in the specifications will not be considered if the item is not a regular cataloged item shown in the current catalog of the manufacturer.

C. Manufacturer's Recommendations: Where installation procedures of any part thereof are required to be in accordance with the recommendations of the manufacturer of the material being installed, printed copies of these recommendations shall be furnished prior to installation. Installation of the item will not be allowed to proceed until the recommendations are received. Failure to furnish these recommendations can be cause for rejection of the material.

1.5 COORDINATION

A. Arrange for duct spaces, pipe spaces, chases, slots, and openings in building structure during progress of construction, to allow for mechanical installations.

B. Coordinate installation of required supporting devices and set sleeves in poured-in-place concrete and other structural components as they are constructed.

C. Coordinate requirements for access panels and doors for mechanical items requiring access that are concealed behind finished surfaces.

D. Provide all designating signs for shutoff valves, control valves, alarms, and the like, as required by the agencies having jurisdiction.

1.6 COORDINATION DRAWINGS

A. Prepare coordination drawings in accordance with Division 01 Section titled “PROJECT COORDINATION” to a scale of 3/8 inch =1'-0 inch (1:75) or larger; detailing major elements, components, and systems of electrical equipment and materials in relationship with other systems, installations, and building components in spaces such as electric room, and electric closets. Indicate locations where space is limited for installation and access and where sequencing and coordination of installations are of importance to the efficient flow of the Work, including (but not necessarily limited to) the following:

1. The coordination drawings shall be produced using AutoCad 2011 or later software. The design drawings will be made available on disks in AutoCad format for use as a basis for the "Coordination" drawings. These documents remain the property of Cosentini Associates and shall be used for no other purpose without expressed, written consent. The contractor shall assume all liabilities resulting from unauthorized use or modifications to the drawings.

2. Indicate the proposed locations of major raceway systems, equipment, and materials. Include the following:

   a. Clearances for servicing equipment, including space for equipment disassembly required for periodic maintenance.

   b. Exterior wall and foundation penetrations.

   c. Fire-rated wall and floor penetrations.

   d. Equipment connections and support details.

   e. Sizes and location of required concrete pads and bases.

3. Indicate conduit banks, concrete encased conduit banks, cable trays, individual raceway (conduit) runs larger than 3 inch, etc. loads and support points and submit to the Structural Engineer for review and approval. Indicate the elevation, location, support points, and loads imposed on the structure at support, anchor points, and size of all lines. Indicate all beam penetrations and slab penetrations sized and coordinated. Indicate all work routed underground or embedded in concrete by dimension to column and building lines.

4. Indicate scheduling, sequencing, movement, and positioning of large equipment into the building during construction.

5. Prepare floor plans, and details to indicate penetrations in floors, walls, and ceilings and their relationship to other penetrations and installations.

6. Prepare reflected ceiling plans to coordinate and integrate sprinkler installation, air outlets and inlets, light fixtures, communication systems components and other ceiling-mounted items.

B. Project Coordination Drawings

1. This Trade shall add to Coordination Drawings prepared by the HVAC Contractor showing all of the electrical work (equipment, conduit, etc.) to be installed as part of the work of this section of the specifications.

2. All seismic supports and restraints as part of the seismic design (as outlined under another section of this work) shall be shown on the coordination drawings.

3. The Coordination Drawings shall be prepared on electronic media (CADD) at not less than 3/8": 1'-0" scale

4. Requirements for vibration isolation shall be shown on the coordination drawings by each trade.

5. This Trade after showing all of the electrical work shall forward the completed reproducible Coordination Drawings to the General Contractor/Construction Manager.

6. The Electrical Contractor shall attend a series of meetings arranged by the General Contractor/Construction Manager to resolve any real or apparent interferences or conflicts with the work of the other Contractors.

7. The Electrical Contractor shall then make adjustments to his work on the Coordination Drawings to resolve any real or apparent interferences or conflicts.

8. After any real or apparent interferences and conflicts have been incorporated into the Coordination Drawings, the Electrical Contractor shall “sign-off” the final Coordination Drawings.

9. The Electrical Contractor shall not install any of this work prior to “sign-off” of final Coordination Drawings. If the electrical work proceeds prior to sign-off of Coordination Drawings, any change to the electrical work to correct the interferences and conflicts that result will be made by the Electrical Contractor at no additional cost to the project.

10. Coordination Drawings are for the Electrical Contractor’s and Owner’s use during construction and shall not be construed as replacing any shop, as-built, or Record Drawings required elsewhere in these Contract Documents.

11. Review of Coordination Drawings shall not relieve the HVAC Contractor from his overall responsibility for coordination of all work performed pursuant to the Contract or from any other requirements of the Contract.

1.7 RECORD DOCUMENTS

A. Prepare record documents in accordance with the requirements in Division 01. In addition to the requirements specified in Division 01, comply with the following:

1. A complete set of "as-built" or record electric drawings shall be made up and delivered to the Architect.

2. The drawings shall show:

a. All electric work installed exactly in accordance with the original design.

b. All electric work installed as a modification or addition to the original design.

c. The dimensional information necessary to delineate the exact location of all circuitry and wiring runs (other than lighting and appliance branch circuitry and small control, signal and communications runs) that are so buried or concealed as to be untraceable by inspection through the regular means of access established for inspection and maintenance.

d. The numbering information necessary to correlate all electrical energy consuming items (or outlets for same) to the panel or switchboard circuits from which they are supplied.

3. The drawings shall be produced using AutoCAD software. The design drawing files will be made available should it be determined that such files would serve as suitable backgrounds for the "as-built" drawings. These documents remain the property of Cosentini Associates and may be used for no other purpose without expressed, written consent. The contractor shall assume all liabilities resulting from unauthorized use or modifications to the drawings.

4. Prior to developing any “as-built” drawings, the Contractor shall coordinate with the Owner, Architect, Engineer and other Contractors the drawing layers, colors, etc. of the CAD drawings

5. CAD files shall each correspond to a single drawing sheet and have all of the x-refs bound to the file. CAD fonts that are not in the standard AutoCAD group shall be embedded into the DWG file.

6. "As-built" information shall be submitted as follows:

   a. CADD drawing files on CD-R or DVD-R in AutoCAD format.

   b. One (1) set of reproducible drawings.

   c. Two (2) sets of blueprints.

7. The quantity of design drawings that are made available shall in no way be interpreted as setting a limit to the number of drawings necessary to show the required "as-built" information.

8. Progress prints of record drawings shall be submitted monthly during the construction period for Architect's approval.

9. As-built drawings for filing with the Building Department (where required) shall be prepared at the same scale, in the same plan format and use the same symbols and nomenclature as the plans filed by Engineer of Record with the Building Department for “Building Permit.”

1.8 MAINTENANCE MANUALS

A. Prepare maintenance manuals in accordance with Division 01. In addition to the requirements specified in Division 01, include the following information for major equipment items such as transformers, switchboards, panelboards, lighting fixtures, and other items as specified elsewhere.

1. Description of function, normal operating characteristics and limitations, performance curves, engineering data and tests, and complete nomenclature and commercial numbers of replacement parts.

2. Manufacturer's printed operating procedures include start-up, break-in, and routine and normal operating instructions; regulation, control, stopping, shutdown, and emergency instructions.

3. Maintenance procedures for routine preventative maintenance and troubleshooting; disassembly, repair, and reassembly; aligning and adjusting instructions.

4. Servicing instructions.

1.9 DELIVERY, STORAGE, AND HANDLING

A. Deliver products to the project properly identified with names, model numbers, types, grades, compliance labels, and other information needed for identification.

B. Unit shall be stored and handled in accordance with manufacturer's instructions.

C. Unit shall be shipped with all listed items and control wiring factory installed unless noted on the submittals and approved prior to shipment.

D. Unit shall be shipped complete as specified. Parts for field installation shall not be shipped and stored on site without prior approval.

E. Rigging: Units shall be fully assembled. Units requiring disassembly for rigging shall be factory assembled and tested. Disassembly, reassembly and testing shall be supervised by the manufacturer's representative.

F. Unit shall be shipped with firmly attached labels that indicate name of manufacturer, model number, serial number, and plan tagging.

G. The Vendor shall shrink wrap all electronic equipment and spare parts prior to shipping. Spare parts are to be delivered at time of owner acceptance.

H. Deliver, store and handle all materials to keep clean and protected from damage.

I. Store products in shipping containers and maintain in place until installation.

J. Protect equipment and other materials from damage after installed from construction debris and other damage.

1.10 CODES, PERMITS AND INSPECTIONS

A. All work shall meet or exceed the latest requirements of all national, state, county, municipal, and other authorities exercising jurisdiction over electrical construction work and the project.

B. All required permits and inspection certificates shall be obtained, paid for, and made available at the completion of the work.

C. Any portion of the work that is not subject to the requirements of an electric code published by a specific authority having jurisdiction shall be governed by the National Electrical Code and other applicable sections of the National Fire Code, as published by the National Fire Protection Association.

D. Installation procedures, methods and conditions shall comply with the latest requirements of the Federal Occupational Safety and Health Administration (OSHA).

E. All equipment furnished as part of the electrical work shall comply with the latest editions of all applicable state and municipal “energy codes.” Provide certification from the equipment suppliers for all energy-consuming equipment that the equipment fully complies with these codes. Equipment submissions will not be accepted for review unless accompanied by such certification in writing.

1.11 GUARANTEES AND CERTIFICATIONS

A. All work shall be guaranteed to be free from defects. Any defective materials or workmanship as well as damage to the work of all trades resulting from same shall be replaced or repaired as directed for the duration of stipulated guaranteed periods.

B. The duration of guarantee periods following the date of beneficial use of the system shall be one year. Beneficial use is defined as operation of the system to obtain its intended use.

C. The date of acceptance shall be the date of the final payment for the work or the date of a formal notice of acceptance, whichever is earlier.

D. Non-durable items such as electric lamps, shall be replaced up to the date of acceptance, such that they shall have had no more than 100 hours use prior to this date.

E. Certification shall be submitted attesting to the fact that specified performance criteria are met by all items of electrical equipment for which such certification is required.

1.12 SEPARATION OF WORK BETWEEN TRADES

A. The specifications for the overall construction delineate various items of work under separate trade headings. The list below sets forth this delineation to the extent that it affects the electric work.

B. In the absence of more detailed information, the list shall be taken as a specific instruction to the electrical trade to include the work assigned to it.

C. Indications that any trade is to perform an item of work means that it is to perform the work for its own accommodation only, except as specifically noted otherwise.

Oth = Divisions other than Electrical (Division 26); Mechanical (Divisions 21, 22 & 23)

Plb = Plumbing

FP = Fire Protection

Htg = Heating, Ventilating & Air Conditioning

Elec = Electrical.

f = Furnished.

i = Installed.

p = Provided (furnished and installed).

Item	Oth	Plb	FP	Htg	Elec	Note
Motors for mechanical equipment.		p	p	p		
Motor controllers for: Htg Plb		f	f	f	i i	Specifications and drawings delineate exceptions. Includes motor control centers if applicable.

Item	Oth	Plb	FP	Htg	Elec	Note
Motor control devices for: Htg Plb		p p	p	p p		Specifications and drawings delineate exceptions. Control devices for mounting within controller are provided integral with controller.
Power wiring for motors: Htg Plb					p p	
Control wiring motor for controllers: Htg Plb				p	p p	Specifications and drawings delineate exceptions.
Temporary light and power.	p					See Generalconditions specifications. To accommodate all trades.
Rigging.					p	
Bracing and dunnage for safe rigging.					p	
Framed slots and openings in walls, decks and slabs.	p					Coordination drawings are required from the electrical contractor.
Sleeves through non-waterproof slabs, decks and walls.					p	Includes drilling of holes when required.
Sleeves through waterproof slabs, decks and walls.					p	Includes drilling of holes for other than field poured concrete.

Waterproof sealing of sleeves through waterproof slabs, decks and walls.					p	

Item	Oth	Plb	FP	Htg	Elec	Note
Fireproof sealing (fire-stopping) excess opening spaces in slabs, decks and fire-rated walls.					p	
Excavation and backfill inside buildings.	p					
Excavation and backfill outside buildings.					p	
Concrete encasement of conduits.					p	Red coloring for concrete encasing primary voltage runs included in electric.
Electric manholes and handholes.					p	Furnishing of covers, associated frames and other hardware included in electric.
Fastenings.					p	
Supports.					p	
Concrete foundations, pads and bases inside buildings.	p					Furnishing of anchors and vibration mounts included in the electric.
Concrete lined trenches in building foundation.	p					
Permanent ladders to equipment.	p					Supplying list of locations where required included in electric.
Opening frames for ceiling recessed lighting fixtures and other electrical items.					p	
Electric heaters with integral fans, (unit heaters, cabinet heaters, fan coil units and the like.)				p		Line and control connections included in electric.

Through wall sleeve type air conditioning and electric heating units.					p	
Electric heater cables for mechanical system pipe tracing.					p	
Item	Oth	Plb	FP	Htg	Elec	Note
Electric power consuming items and controls for same not referred to above.	p	p	p	p		Line and control connections to equipment included in electric.
Rubbish removal.					p	Removal of the shipping and packing materials of electrical items is included in the electric regardless by whom the items are furnished.
Special tools for maintenance of equipment furnished as part of electric work.					f	

D. Include in the electrical work all necessary supervision and the issuing of all coordination information to any other trades who are supplying work to accommodate the electrical installations.

E. For items of equipment that are to be installed but not purchased as part of the electrical work, the electrical work shall include:

1. The coordination of their delivery.

2. Their unloading from delivery trucks driven in to any point on the property line at grade level.

3. Their safe handling and field storage up to the time of permanent placement in the project.

4. The correction of any damage, defacement or corrosion to which they may have been subjected.

5. Their field make-up and internal wiring as may be necessary for their proper operation.

6. Their mounting in place including the purchase and installation of all dunnage, supporting members, and fastenings necessary to adapt them to architectural and structural conditions.

7. Their connection to building wiring including the purchase and installation of all "crown boxes" or other type of termination junction boxes necessary to adapt and connect them to this wiring. Included also shall be the purchase and installation of any substitute lugs

or other wiring terminations as may be necessary to adapt their terminals to the building wiring as called for and to the connection methods set forth in these specifications.

F. Items of equipment that are installed but not purchased as part of the electrical work shall be carefully examined upon delivery to the project. Claims that any of these items have been received in such condition that their installation will require procedures beyond the reasonable scope of the electric work will be considered only if presented in writing within one week of the date of delivery to the project of the items in question. The electric work includes all procedures, regardless of how extensive, necessary to put into satisfactory operation, all items for which no claims have been submitted as outlined above.

1.13 DEFINITIONS AND INTERPRETATIONS

A. As used in the drawings and specifications for electrical work, certain non-technical words shall be understood to have specific meanings as follows regardless of indications to the contrary in the General Conditions or other documents governing the electric work.

1. "Furnish" – Purchase and deliver to the project site complete with every necessary appurtenance and support, all as part of the electrical work. Purchasing shall include payment of all sales taxes and other surcharges as may be required to assure that purchased items are free of all liens, claims or encumbrances. Payment of sales taxes is, however, specifically excluded.

2. "Install" – Unload at the delivery point at the site and perform every operation necessary to establish secure mounting and correct operation at the proper location in the project, all as part of the electrical work.

3. "Provide" – "Furnish" and "install."

4. "New" – Manufactured within the past two years and never before used.

5. Regardless of their usage in codes or other industry standards, certain words as used in the drawings or specifications for the electrical work, shall be understood to have the specific meanings ascribed to them in the following list:

a. "Circuitry" – Any electric work (not limited to light and power distribution) that consists of wires, cables, raceways, and/or specialty wiring method assemblies taken all together complete with associated junction boxes, pull boxes, outlet boxes, joints, couplings, splices and connections except where limited to a lesser meaning by specific description.

b. "Wiring" – Same as Circuitry.

c. "Circuit" – Any specific run of circuitry.

d. "Branch Circuit" – Any light and power distribution system circuit that, at its load end, is directly connected to one or more electrical energy consuming items with no overcurrent protection devices interposed, other than (where required) those protecting the energy consuming items from overloading or overheating.

e. "Appliance Panel" – Any panel, used in a light and power distribution system, containing single pole and/or multipole branches rated in various sizes.

f. "Lighting Panel" – Any panel used in a light and power distribution system, having all (or the majority) of its branches single pole and rated the same.

g. "Lighting and Appliance Branch Circuitry" – All or any portion of branch circuits outgoing from a lighting or appliance panel or Load Center.

h. "Feeder" – Any item of light and power circuitry used in a distribution system that is not lighting and appliance branch circuitry.

i. "Main Feeder" – Any feeder that, at its supply end, is connected through its own overcurrent protection (and switching) device, and none other, directly to a main service or a main service overcurrent protection (and switching) device.

j. "Branch Feeder" – A feeder, other than a main feeder, that complies with the definition of a branch circuit.

k. "Submain Feeder" – Any feeder that is neither a main feeder nor a branch feeder.

l. "Distribution Panel" – Any panel, used in a light and power distribution system, containing only multi-pole branches and with all (or the majority) of its branches used for feeders supplying other panels.

m. "Power Panel" – Same as distribution panel, except with all (or the majority) of its branches used for feeders that do not supply other panels.

n. "Motor Power Circuit" – Any circuit that operates nominally at 100 volts or more, and that carries electrical input energy to a motor.

o. "Motor Control Circuit" (used in conjunction with a motor for which a magnetic starter is supplied) – Any circuit (other than a motor power circuit) that operates nominally at 100 volts or more, and that carries current intended for directing or indicating the performance of a motor starter.

p. "Motor Control Circuit" (used in conjunction with a motor for which a manual starter is supplied) – Any circuit containing an extension of power circuit wires, other than those constituting the direct connection between source of supply, starter and motor.

q. "Motor Control Actuating Device" – Any device that performs a switching function in a motor control circuit (pushbuttons, automatic contacting devices, etc.).

r. "Motor Control Actuated Device" – Any device that functions in response to voltage received from a motor control circuit (pilot lights, solenoids, etc.)

s. "Package Unit" – An item of equipment having one or more motors or other electric energy consuming elements integrally factory mounted on a single base, complete with all associated control devices and interconnecting wiring.

t. "Low Voltage" – Below 50 volts.

u. "Process Control System" – An overall control and/or logging system available as a
"package" from specialty manufacturers (commonly referred to as a "Temperature Control System" or an "Automatic Control System" or a "Building Management System").

v. "Grade Slab" – A building floor slab that is in contact with or directly over grade

(earth).

w. "Building Confines" – The extent of a building, as defined by the outside surfaces of its peripheral walls, the top surface of its roof, and the underside surface of its grade slab.

x. "Distribution Switch" – Any switch used in a light and power system other than a tumbler, toggle or specialty switch in the "wiring device" category.

y. "Normal Electric Work Conditions" – Locations within building confines that are neither damp, wet nor hazardous and that are not used for air handling.

z. "Underground" – Subsurface and exterior to building foundations.

aa. "At Underside of Grade Slab" – Under a grade slab and integrated into it. bb.

"Below Grade Slab" – Under a grade slab but not integrated into it.

cc. "Standard" (as applied to wiring devices) –- Not of a separately designated individual type.

dd. "Raceway" – Any pipe, duct, extended enclosure, or conduit (as specified for a particular system) that is used to contain wires, and that is of such nature as to require that the wires be installed by a "pulling in" procedure.

ee. "Specialty Cast-in-Floor Raceway" – Underfloor duct, cellular deck and the like.

ff. "Concealed" (as applied to circuitry) – Covered completely by building materials, except for penetrations (by boxes and fittings) to a level flush with the surface as necessitated by functional or specified accessibility requirements.

gg. "Exposed" (as applied to circuitry) – Not covered in any way by building materials.

hh. "Subject to Mechanical Damage" – Exposed within seven feet of the floor in mechanical rooms, manufacturing spaces, vehicular spaces, or other spaces where heavy items (over 100 pounds) are moved around or rigged as a common practice or as required for replacement purposes.

ii. "Primary" (as applied to light and power distribution) – Over 600 volts. jj.

"Secondary" (as applied to light and power distribution) – Under 600 volts.

kk. "Assembly" – A defined set of elements of electric work.

B. The following shall be treated as damp or wet locations within building confines, regardless of whether or not a high ambient moisture level is found to exist:

1. Spaces where any designations indicating weatherproof (WP) or vapor-proof (VP) appear on the drawings.

2. Cooling tower areas.

3. Below waterproofing in slabs applied directly on grade.

4. Kitchens up to a height of 18" above finished floor.

5. Outside of waterproofing in foundation walls in contact with grade.

6. Above waterproofing in slabs having no building above.

7. Above waterproofing in fill on slabs having no building above.

8. Spaces containing equipment owned and/or maintained by the electric utility company.

C. Electric work in slabs, walls or suspended ceilings that bound on a space defined as a damp or wet location shall meet the damp or wet location requirements if it enters into, or opens into the damp or wet location in any way.

D. Where the word "conduit" is used without specific reference to type, it shall be understood to mean "raceway".

E. Except where modified by a specific notation to the contrary, it shall be understood that the indication and/or description of any electrical item in the drawings and specifications for electrical work carries with it the instruction to furnish, install and connect the item as part of the electrical work regardless of whether or not this instruction is explicitly stated.

F. It shall be understood that the specifications and drawings are complementary and are to be taken together for a complete interpretation of the work. Where there are conflicts between the drawings and specifications or within the specifications or drawings themselves, the items of higher standard shall govern.

G. To the extent that they govern the basic work, the specifications also govern change order work if any.

H. No exclusion from or limitation in, the symbolism used on the drawings for electrical work or the language used in the specifications for electrical work shall be interpreted as a reason for omitting the appurtenances or accessories necessary to complete any required system or item of equipment.

I. The drawings for electrical work utilize symbols and schematic diagrams that have no dimensional significance. The work shall, therefore, be installed to fulfill the diagrammatic intent expressed on the electrical drawings, but in conformity with the dimensions indicated on the final working drawings, field layouts and shop drawings of all trades. In particular, information as to the exact size, location and electrical connection points for mechanical equipment shall be derived by reference to HVAC and Plumbing documents.

J. Certain details appear on the drawings for electrical work that are specific with regard to the dimensioning and positioning of the work. These are intended only for general information purposes. They do not obviate field coordination for individual items of the indicated work.

K. Information as to general construction and architectural general construction and architectural features and finishes shall be derived from structural and architectural drawings and specifications only.

L. The use of words in the singular shall not be considered as limiting where other indications denote that more than one item is referred to.

M. Ratings of devices, materials and equipment specified without reference to specific performance criteria shall be understood to be nominal or nameplate ratings established by means of industry standard procedures.

N. The restriction of conductors in wires to copper, as specified elsewhere, shall be understood to also apply to all conductors (wire, cable or bus as applicable), including those provided as part of factory assembled components such as transformers, switchboards, panelboards, overcurrent protection and switching devices. This restriction shall apply equally to all such equipment regardless of indications (or lack thereof) elsewhere to the contrary. Aluminum will not be acceptable.

1.14 PRECONSTRUCTION CONFERENCE PRIOR TO START OF WORK

A. Prior to commencing any Work, the CM, together with designated major Contractors, shall confer with the Architect and Engineer concerning the Work under the Construction Contract.

B. The pre-construction conference will be conducted under the leadership of the CM and will occur soon after the CM notifies the Subcontractors of contract award. The pre-construction conference will focus on items such as the expedited submittal review procedure, interface and coordination between Contractor work scope, the CM's project site rules and requirements, temporary utility requirements, CM's construction schedule, etc.

1.15 SEQUENCING AND SCHEDULING

A. Coordinate electrical equipment installation with other building components.

B. Arrange for chases, slots, and openings in building structure during progress of construction to allow for mechanical installations.

C. Coordinate the installation of required supporting devices and set sleeves in poured in place concrete and other structural components as they are constructed.

D. Sequence, coordinate, and integrate installations of mechanical materials and equipment for efficient flow of the Work. Coordinate installation of large equipment requiring positioning prior to closing in the building.

E. Coordinate connection of mechanical services.

F. Coordinate connection of electrical systems with exterior underground and overhead utilities and services. Comply with requirements of governing regulations, franchised service companies, and controlling agencies.

G. Coordinate requirements for access panels and doors where electrical items requiring access are concealed behind finished surfaces. See paragraph titled “Separation of Work Between Trades” to determine whether access panels and doors the responsibility of the Contractor for Division 08 or the Contractor responsible for Division 26

H. Coordinate installation of identifying devices after completing covering and painting where devices are applied to surfaces. Install identifying devices prior to installing acoustical ceilings and similar concealment.

1.16 EXAMINATION OF SITE AND CONTRACT DOCUMENTS

A. Before submitting prices or beginning work, thoroughly examine the site and the Contract Documents.

B. No claim for extra compensation will be recognized if difficulties are encountered which examination of site conditions and Contract Documents prior to executing Contract would have revealed.

1.17 WORKMANSHIP

A. The entire work provide in this Specification shall be constructed and finished in every aspect in a workmanlike and substantial manner.

B. It is not intended that the Drawings shall show every raceway, conduit, fitting, equipment and appliance. Electrical Contractor shall furnish and install all such parts as may be necessary to complete the systems in accordance with the best trade practice.

C. Keep other trades fully informed as to shape, size and position of all openings required for apparatus and give full information to the General Contractor and other trades in a timely manner so that all opening may be built in advance. Furnish and install all sleeves, supports and the like as specified or as required.

D. In case of failure on the part of the Electrical Contractor to give proper and timely information as required above, he shall do his own cutting and patching or have same done by the General Contractor, but in any case, without extra expense to the Owner.

E. Obtain detailed information from the manufacturers of apparatus as to the proper method of installing and connecting same. Obtain all information from the General Contractor and other trades which may be necessary to facilitate work and completion of the whole project.

PART 2 - PRODUCTS

2.1 EQUIPMENT TOUCH UP PAINT

A. For Equipment: Equipment manufacturer's paint selected to match installed equipment finish.

B. Galvanized Surfaces: Zinc-rich paint recommended by item manufacturer.

2.2 ACCESS DOORS IN FINISHED CONSTRUCTION

A. This Contractor shall furnish access doors as required for operation and maintenance of concealed equipment, valves, controls, etc., and coordinate their delivery with the Contractor for Division 08. Installation of doors will be by the Contractor for Division 08, but this Contractor shall locate the doors on approved shop drawings and shall be held responsible for the accessibility of all concealed valves, controls, equipment, etc. The delivery point for the access doors shall be where designated by the Construction Manager General Contractor who shall coordinate the time of delivery with the Contractors involved.

B. Coordinate and prepare a location, size, and function schedule of access required and deliver to a representative of the Contractor for Division 08.

C. Furnish and install distinctively colored buttons in finished ceiling.

D. Access doors shall be of ample size to perform proper maintenance on concealed equipment, valves, controls, etc. but shall not be less than a minimum of 16" x 16". Required sized of doors

1. Where two (2) or less valves are located with their bonnets within 12" of the face of door, and all portions of valves are within the area defined by the opening of the door, 16" by 16" doors may be used.

2. Where more than two (2) valves are served by a door and the bonnets are within 12" of the face of door, the size of door shall be increased so that all portions of the valves are within opening

3. The area defined by the opening of the door. Where bonnets of the valves are more than 12" from face of door, the doors shall have a minimum 20" by 20" clear opening.

PART 3 - EXECUTION

3.1 ROUGH-IN

A. Verify final locations for rough-ins with field measurements and with the requirements of the actual equipment to be connected.

3.2 ELECTRICAL INSTALLATIONS

A. General: Sequence, coordinate, and integrate the various elements of electrical systems, materials, and equipment. Comply with the following requirements:

1. Coordinate electrical systems, equipment, and materials installation with other building components.

2. Verify all dimensions by field measurements.

3. Arrange for chases, slots, and openings in other building components during progress of construction, to allow for electrical installations.

4. Coordinate the installation of required supporting devices and sleeves to be set in poured-in-place concrete and other structural components, as they are constructed.

5. Sequence, coordinate, and integrate installations of electrical materials and equipment for efficient flow of the Work. Give particular attention to large equipment requiring positioning prior to closing in the building.

6. Where mounting heights are not detailed or dimensioned, install systems, materials, and equipment to provide the maximum headroom possible.

7. Install systems, materials, and equipment to conform with approved submittal data, including coordination drawings, to greatest extent possible. Conform to arrangements indicated by the Contract Documents, recognizing that portions of the Work are shown only in diagrammatic form. Where coordination requirements conflict with individual system requirements, refer conflict to the Architect.

8. Install systems, materials, and equipment level and plumb, parallel and perpendicular to other building systems and components, where installed exposed in finished spaces.

9. Install electrical equipment to facilitate servicing, maintenance, and repair or replacement of equipment components. As much as practical, connect equipment for ease of disconnecting, with minimum of interference with other installations.

10. Coordinate location of access panels or doors where outlet boxes, junction boxes, or equipment are concealed behind finished surfaces.

11. Install systems, materials, and equipment giving right-of-way priority to systems required to be installed at a specified slope.

B. Coordinate electrical service connections to components furnished by utility companies.

1. Coordinate installation and connection of exterior underground and overhead utilities and services.

2. Comply with requirements of authorities having jurisdiction and of utility company providing electrical power and other services.

C. Locations of all devices, fixtures, and other visible components shall be as indicated on the architectural drawings. Mounting heights shall be as specified in Division 26 Section “Raceways and Boxes”.

D. Each piece of mechanical equipment located outside the building or on the roof shall be within 25 feet (7 m) of a duplex outlet. Where necessary to meet these criteria, provide duplex outlets in addition to those devices shown on the drawings. Each shall be complete with waterproof cover and integral GFI protection, and 20 ampere circuitry to the nearest 120 volt panel on the proper electric meter.

E. Include electrical work as required for reading of water meters, as described in Plumbing drawings and Division 23 specifications.

F. Include electrical work as required for reading of steam meters, as described in HVAC drawings, Division 23 specifications, and Utility Company standards and related documents.

3.3 FIRE-STOPPING

A. Contractor responsible for the work of Division 26 shall be responsible for fire-stopping of all work installed as part of the work of Division 26. B. Fire-stopping system must be U.L. approved.

C. All spaces between raceways, conduit, etc. and their respective sleeves or fire-rated construction shall be packed full depth with an approved fire resistant material, compressed firmly in place. Fiberglass shall not be used. Sleeve clearances shall not exceed 2 inches between raceways, conduits, etc. and sleeves.

D. Fire-stopping material and installed configuration shall maintain the fire rating of the penetrated wall, floor or ceiling.

3.4 SITE VISITATION SURVEYS AND MEASUREMENTS

A. All existing conditions cannot be completely detailed on the drawings. These include, but are not limited to piping fixtures, equipment, etc. This contractor shall survey the site and include all required costs in making up their bid proposal.

B. The contractor shall visit the premises to determine existing conditions and compare same with drawings and specifications and satisfy himself of all conditions prior to the submission of a bid

proposal. No allowance will be made for failure to comply with these requirements and a bid proposal shall be construed as evidence he has done so.

C. Before submitting bid, visit the project site to satisfy yourself that all equipment shown or specified in the project contract documents can be installed generally as shown. Advise Owner prior to bid date, of any space or other installation problems.

D. Before submitting bid, become thoroughly familiar with all conditions under which work will be installed, as you will be held responsible for any assumptions, any omissions or errors made as a result of failure to become familiar with the site and Contract Documents.

E. Investigate each space through which equipment must be moved. Where necessary, equipment shall be shipped from manufacturer in sections of size suitable for moving through restrictive spaces available. Ascertain from building Owner at what time of day equipment may be moved through certain restrictive areas.

F. Install work so as to be readily accessible for operation, maintenance and repair. Minor deviations from drawings may be made to accomplish this, but changes which involve extra cost shall not be made without approval.

G. Removal and relocation of certain existing work will be necessary for the performance of the general work. All existing conditions cannot be completely detailed on the drawings. The Contractor shall survey the site and include all required changes in making up their bid proposal.

H. Submission of a bid shall be construed as evidence, that a careful examination of the portions of the existing building, equipment, etc., which affect this work and the access to such spaces has been made and that the Contractor is familiar with existing conditions and difficulties that will affect the execution of the work. Claims will not be allowed for labor, equipment or materials required because of difficulties encountered, which could have been foreseen during such an examination.

3.5 ELECTRICAL DEMOLITION

A. This contractor shall provide all required labor, materials, equipment and perform all operations for complete demolition, removal and relocation of the existing work as indicated on the drawings and/or as specified or described and/or as required for the performance of the general work under this contract.

B. The project contains existing electrical installations. Integrate the existing installations into the overall project as described below.

C. Except for items specifically indicated as being reused, completely abandon existing electrical work by:

1. De-energizing it and/or cutting it loose from every live source.

2. Removing all existing wires and cables from existing raceways that remain.

D. Except where it is integrated into a new installation, maintain all existing electrical work operating and intact by including all procedures and materials necessary to:

1. Maintain the accessibility and functionality of all outlets, manholes, junction boxes, pull boxes, wiring devices, panels, switchgear, fixtures and the like, that may be covered over or interfered with by new construction work of all trades.

2. Maintain continuity in the existing light and power circuitry, communications and signal circuitry or other electric runs that must be disrupted to allow the new work of all trades to proceed.

3. Cut back and terminate at accessible points, in a safe manner, all live wiring made unnecessary or obsolete by the new construction work of all trade

E. No portion of existing electrical installations shall be used to make up any of the required electrical work:

1. Equipment and devices, as specifically indicated.

2. Raceways with associated junction boxes and pull boxes) only for feeders as specifically indicated.

3. Raceways (with associated junction boxes and pull boxes) and cables for feeders as specifically indicated.

4. Concealed raceways (with associated outlet boxes) only for lighting and appliance branch circuitry to the maximum extent possible.

F. Unless otherwise specifically specified, include all cutting and patching of existing floors, walls, partitions and other materials in the existing building. The Contractor shall restore these areas to original conditions.

G. Specifications pertaining to equipment and devices, hereinafter included, apply to new work. Where it is required that items be made up with components that are both new and existing, it shall be interpreted that the specifications govern only as they are applicable to new components.

H. Outages of existing electrical systems necessitated by the new construction work of all trades shall be in accordance with a schedule issued in the field by the architect. Include all electric work, overtime labor and supervision necessary to adhere to this schedule.

I. Any existing electrical work that is pulled out or cut away in compliance with the above requirements shall be removed from the site as if it were rubbish. Proper credit shall be given for all salvageable items.

J. During demolition procedures, provide all necessary protection for existing electric work required for reuse.

3.6 CONNECTIONS TO EXISTING WORK

A. Plan installation of new work and connections to existing work to insure minimum interference with regular operation of existing facilities. Submit to the Owner for approval, date schedule of necessary temporary shut-downs of existing services. All shutdowns shall be made at such times as will not interfere with regular operation of existing facilities and only after written approval of Owner. To insure continuous operation, make necessary temporary connections between new and existing work. All costs resulting from temporary shut-downs shall be borne by this Contractor.

B. All shutdowns shall be done on overtime.

C. The drawings of necessity utilize symbols and schematic diagrams to indicate connections to existing work. Neither of these have any dimensional significance nor do they delineate every item required for the intended installations.

D. The contractor shall coordinate all connections to existing work with the facility engineer. Contractor shall field verify exact location of all existing services.

E. Connect new work to existing work in neat and approved manner. Restore existing work disturbed to original condition.

3.7 FIELD QUALITY CONTROL

A. Inspect installed components for damage and faulty work, including the following:

1. Cutting and patching for electrical construction.

2. Touch up painting.

3.8 CLEANING AND PROTECTION

A. On completion of installation, including outlets, fittings, and devices, inspect exposed finish. Remove burrs, dirt, paint spots, and construction debris.

B. Protect equipment and installations and maintain conditions to ensure that coatings, finishes, and cabinets are without damage or deterioration at time of Substantial Completion.

END OF SECTION 26 05 00

X:\Specs\140143\260500 common work results for electrical.doc

SECTION 26 05 19 - LOW-VOLTAGE ELECTRICAL POWER CONDUCTORS AND CABLES

PART 1 - GENERAL

1.1 RELATED DOCUMENTS

A. Drawings and general provisions of the Contract, including General and Supplementary Conditions and Division 01 Specification Sections, apply to this Section.

1.2 SUMMARY

A. This Section includes the following:

1. Building wires and cables rated 600 V and less.

2. Connectors, splices, and terminations rated 600 V and less.

1.3 ACTION SUBMITTALS

A. Product Data: For each type of product indicated.

1.4 INFORMATIONAL SUBMITTALS

A. Qualification Data: For testing agency.

B. Field quality-control test reports.

1.5 QUALITY ASSURANCE

A. Testing Agency Qualifications: An independent agency, with the experience and capability to conduct the testing indicated, that is a member company of the InterNational Electrical Testing Association or is a nationally recognized testing laboratory (NRTL) as defined by OSHA in 29 CFR 1910.7, and that is acceptable to authorities having jurisdiction.

1. Testing Agency's Field Supervisor: Person currently certified by the InterNational Electrical Testing Association or the National Institute for Certification in Engineering Technologies to supervise on-site testing specified in Part 3.

B. Electrical Components, Devices, and Accessories: Listed and labeled as defined in NFPA 70, Article 100, by a testing agency acceptable to authorities having jurisdiction, and marked for intended use.

C. Comply with NFPA 70 as amended by state and local codes (NYC Electrical Code).

PART 2 - PRODUCTS

2.1 CONDUCTORS AND CABLES

A. Available Manufacturers: Subject to compliance with requirements, manufacturers offering products that may be incorporated into the Work include, but are not limited to, the following:

1. American Insulated Wire Corp.; a Leviton Company.
2. General Cable Corporation.
3. Senator Wire & Cable Company.
4. Southwire Company.

B. Copper Conductors: Comply with NEMA WC 70.

C. Conductor Insulation: Comply with NEMA WC 70.

D. Multiconductor Cable: Comply with NEMA WC 70.

E. In general, cable ampacities are based on a 60 degree C rating for cables #1 AWG and smaller and on a 75 degree C rating for larger cables. In conjunction with this, note the following:

1. 75 degree C ratings may be utilized for cables #1 AWG and smaller where overcurrent protection and switching devices (OCD's), wiring devices and solidly connected equipment connected to such cables are listed and identified for use with 75 degree C rated conductors. (Note that these specifications require all OCD's - regardless of ampere rating to be suitable for use with 75 degree C rated conductors).
2. Increase indicated cable (and raceway) sizing as required for circuitry where conductors #1 AWG and smaller will connect directly to solidly connected utilization equipment whose load current will exceed the 60 degree C rating of the cable, and for which manufacturer's approval for cable terminations is less than 75 degrees C, or to receptacles whose ampere rating exceeds the 60 degree C rating of the connected cables unless such receptacles are listed for use with 75 degree C rated conductors. Note that accessible intermediate tap boxes may be utilized adjacent to 60 degree C rated terminations to allow conductor "upsizing" locally so as to comply with such termination requirements.
3. Increase indicated cable (and raceway) sizing as required for circuitry where conductors are run in conduits exposed to direct sunlight on or above rooftops in accordance with the temperature adjustment factors described in the electrical code.

2.2 CONNECTORS AND SPLICES

A. Available Manufacturers: Subject to compliance with requirements, manufacturers offering products that may be incorporated into the Work include, but are not limited to, the following:

1. Hubbell Power Systems, Inc.
2. O-Z/Gedney; EGS Electrical Group LLC.
3. 3M; Electrical Products Division.
4. Tyco Electronics Corp.

B. Description: Factory-fabricated connectors and splices of size, ampacity rating, material, type, and class for application and service indicated.

PART 3 - EXECUTION

3.1 CONDUCTOR MATERIAL APPLICATIONS

A. Feeders: Copper Solid for No. 10 AWG and smaller; stranded for No. 8 AWG and larger.

B. Branch Circuits: Copper. Solid for No. 10 AWG and smaller; stranded for No. 8 AWG and larger.

3.2 CONDUCTOR INSULATION AND MULTICONDUCTOR CABLE APPLICATIONS AND WIRING METHODS

A. Service Entrance: Type XHHW, single conductors in raceway.

B. Exposed Feeders: Type THHN-THWN, single conductors in raceway.

C. Feeders Concealed in Ceilings, Walls, Partitions, and Crawlspaces: Type THHN-THWN, single conductors in raceway or Metal-clad cable, Type MC.

D. Feeders Concealed in Concrete, below Slabs-on-Grade, and Underground: Type THHNTHWN, single conductors in raceway.

E. Feeders Installed below Raised Flooring: Type THHN-THWN, single conductors in raceway or Metal-clad cable, Type MC.

F. Exposed Branch Circuits, Including in Crawlspaces: Type THHN-THWN, single conductors in raceway.

G. Branch Circuits Concealed in Ceilings, Walls, and Partitions: Type THHN-THWN, single conductors in raceway or Armored cable, Type AC.

H. Branch Circuits Concealed in Concrete, below Slabs-on-Grade, and Underground: Type THHN-THWN, single conductors in raceway.

I. Branch Circuits Installed below Raised Flooring: Type THHN-THWN, single conductors in raceway.

J. Class 1 Control Circuits: Type THHN-THWN, in raceway.

K. Class 2 Control Circuits: Type THHN-THWN, in raceway or Power-limited cable, concealed in building finishes.

L. Provide THHW-2, THWN-2 or XHHW-2 insulation for conductors 1/0 and larger in "wet" locations. Conductors utilized in underground installations shall be UL Listed for use in wet locations. Type THHW-2 shall not be utilized where excluded by conduit sizing. Type THWN shall not be utilized for connection to 100 percent rated overcurrent devices.

3.3 INSTALLATION OF CONDUCTORS AND CABLES

A. Conceal cables in finished walls, ceilings, and floors, unless otherwise indicated.

B. Use manufacturer-approved pulling compound or lubricant where necessary; compound used must not deteriorate conductor or insulation. Do not exceed manufacturer's recommended maximum pulling tensions and sidewall pressure values.

C. Use pulling means, including fish tape, cable, rope, and basket-weave wire/cable grips, that will not damage cables or raceway.

D. Install exposed cables parallel and perpendicular to surfaces of exposed structural members, and follow surface contours where possible.

E. Support cables according to Section 26 05 29 "Hangers and Supports for Electrical Systems."

F. Identify and color-code conductors and cables according to Section 26 05 53 "Identification for Electrical Systems."

1. Cables shall comply with termination temperature ratings as specified hereinafter.

2. Where required in order to comply with code restrictions on allowable voltage drop, increase the conductor size and/or add parallel sets of conductors, as required to limit the voltage drop to the point of final distribution to the code mandated maximum voltage drop. Add parallel conductors if the maximum available conductor size will not sufficiently limit the voltage drop.

3. Where installed in accordance with the above, and with the manufacturer’s requirements and electrical code requirements for free air installation, the free air rating of the cable may be used. Provide calculations to demonstrate compliance with the requirements above.

4. Protection of wiring or cables supplying Fire Service Access Elevator:

a. Wires or cables that provide normal power, control signals, communication with the car, lighting, heating, air conditioning, ventilation and fire-detecting systems to fire service access elevators shall be protected by construction having a minimum one-hour two-hour fire-resistance rating or shall be circuit integrity cable having a minimum one-hour two-hour fire-resistance rating.

b. Wires or cables that provide standby or emergency power, control signals, communication with the car, lighting, heating, air conditioning, ventilation and firedetecting systems to fire service access elevators shall be protected by construction having a minimum two-hour fire-resistance rating or shall be circuit integrity cable having a minimum two-hour fire-resistance rating.

3.4 CONNECTIONS

A. Tighten electrical connectors and terminals according to manufacturer's published torquetightening values. If manufacturer's torque values are not indicated, use those specified in UL 486A and UL 486B.

B. Make splices and taps that are compatible with conductor material and that possess equivalent or better mechanical strength and insulation ratings than unspliced conductors.

1. Use oxide inhibitor in each splice and tap conductor for aluminum conductors.

C. Wiring at Outlets: Install conductor at each outlet, with at least 12 inches (300 mm) of slack.

3.5 SLEEVE AND SLEEVE-SEAL INSTALLATION FOR ELECTRICAL PENETRATIONS

A. Install sleeves and sleeve seals at penetrations of exterior floor and wall assemblies. Comply with requirements in Section 26 05 44 "Sleeves and Sleeve Seals for Electrical Raceways and Cabling."

3.6 FIRESTOPPING

A. Apply firestopping to electrical penetrations of fire-rated floor and wall assemblies to restore original fire-resistance rating of assembly according to Section 07 84 13 "Penetration Firestopping."

3.7 FIREPROOFING WIRES AND CABLES:

A. Beyond the termination of raceways, apply fireproofing over the unprotected insulation and/or splices of the following:

1. All service feeder cables ahead of main service overcurrent protection devices within all the pits, pull boxes they pass through and elsewhere where they are not enclosed in raceways.

2. Fire pump feeder cables wherever they extend beyond the termination of raceways

3. All feeder wires and cables emanating from different secondary service connections that, due to indications on the drawings or unavoidable field conditions are forced to enter the same unbarriered compartment of a cable chamber, cable pit, pull box or junction box.

B. Fireproofing of wires and cables shall be by means of a half-lapped layer of Scotch 77 fire and arc-proofing tape. The wrapped tape shall be secured by a band consisting of two layers of glass cloth electrical tape. Fireproofing shall be extended up into raceways. Fireproofing shall be applied in an overall manner to raceway groupings of conductors.

3.8 FIELD QUALITY CONTROL

A. Testing Agency: Engage a qualified testing agency to perform tests and inspections and prepare test reports.

B. Perform tests and inspections and prepare test reports.

C. Tests and Inspections:

1. After installing conductors and cables and before electrical circuitry has been energized, test for compliance with requirements.

2. Perform each visual and mechanical inspection and electrical test stated in NETA Acceptance Testing Specification. Certify compliance with test parameters. Include for all existing cables which are being made part of the new work.

3. Infrared Scanning: After Substantial Completion, but not more than 60 days after Final Acceptance, perform an infrared scan of each splice in cables and conductors No. 2 AWG and larger. Remove box and equipment covers so splices are accessible to portable scanner.

   a. Follow-up Infrared Scanning: Perform an additional follow-up infrared scan of each splice 11 months after date of Substantial Completion.

   b. Instrument: Use an infrared scanning device designed to measure temperature or to detect significant deviations from normal values. Provide calibration record for device.

   c. Record of Infrared Scanning: Prepare a certified report that identifies splices checked and that describes scanning results. Include notation of deficiencies detected, remedial action taken, and observations after remedial action. D. Test Reports: Prepare a written report to record the following:

1. Test procedures used.

2. Test results that comply with requirements.

3. Test results that do not comply with requirements and corrective action taken to achieve compliance with requirements.

E. Remove and replace malfunctioning units and retest as specified above.

END OF SECTION 26 05 19

X:\Specs\140143\260519 low-voltage electrical power conductors and cables.doc

SECTION 26 05 26 - GROUNDING AND BONDING FOR ELECTRICAL SYSTEMS

PART 1 - GENERAL

1.1 RELATED DOCUMENTS

A. Drawings and general provisions of the Contract, including General and Supplementary Conditions and Division 01 Specification Sections, apply to this Section.

1.2 SUMMARY

A. Section includes grounding systems and equipment, plus the following special applications:

1. Underground distribution grounding.

1.3 ACTION SUBMITTALS

A. Product Data: For each type of product indicated.

1.4 INFORMATIONAL SUBMITTALS

A. Informational Submittals: Plans showing dimensioned as-built locations of grounding features specified in "Field Quality Control" Article, including the following:

1. Ground rods.

2. Ground rings.

3. Grounding arrangements and connections for separately derived systems. B.

Field quality-control reports.

1.5 CLOSEOUT SUBMITTALS

A. Operation and Maintenance Data: For grounding to include in emergency, operation, and maintenance manuals.

1.6 QUALITY ASSURANCE

A. Testing Agency Qualifications: Member company of NETA or an NRTL.

1. Testing Agency's Field Supervisor: Currently certified by NETA to supervise on-site testing.

B. Electrical Components, Devices, and Accessories: Listed and labeled as defined in NFPA 70, by a qualified testing agency, and marked for intended location and application. C. Comply with UL 467 for grounding and bonding materials and equipment.

D. Comply with NFPA 70, as amended by state and local codes.

PART 2 - PRODUCTS

2.1 CONDUCTORS

A. For insulated conductors, comply with Division 26 section Low-Voltage Electrical Power Conductors and Cables". B. Material: Copper.

C. Equipment Grounding Conductors: Insulated with green-colored insulation.

D. Insulated Conductors: Copper or tinned-copper wire or cable insulated for 600 V unless otherwise required by applicable Code or authorities having jurisdiction. E. Grounding Electrode Conductors: Stranded cable.

F. Bare Copper Conductors:

1. Solid Conductors: ASTM B 3.

2. Stranded Conductors: ASTM B 8.

3. Tinned Conductors: ASTM B 33.

4. Bonding Cable: 28 kcmil, 14 strands of No. 17 AWG conductor, 1/4 inch (6 mm) in diameter.

5. Bonding Conductor: No. 4 or No. 6 AWG, stranded conductor.

6. Bonding Jumper: Copper tape, braided conductors terminated with copper ferrules; 1-5/8 inches (41 mm) wide and 1/16 inch (1.6 mm) thick.

7. Tinned Bonding Jumper: Tinned-copper tape, braided conductors terminated with copper ferrules; 1-5/8 inches (41 mm) wide and 1/16 inch (1.6 mm) thick.

G. Grounding Bus: Predrilled rectangular bars of annealed copper, 1/4 by 4 inches (6.3 by 100 mm) in cross section, with 9/32-inch (7.14-mm) holes spaced 1-1/8 inches (28 mm) apart. Stand-off insulators for mounting shall comply with UL 891 for use in switchboards, 600 V. Lexan or PVC, impulse tested at 5000 V.

2.2 CONNECTORS

A. Listed and labeled by an NRTL acceptable to authorities having jurisdiction for applications in which used and for specific types, sizes, and combinations of conductors and other items connected.

B. Bolted Connectors for Conductors and Pipes: Copper or copper alloy, pressure type with at least two bolts.

1. Pipe Connectors: Clamp type, sized for pipe.

C. Welded Connectors: Exothermic-welding kits of types recommended by kit manufacturer for materials being joined and installation conditions.

D. Bus-bar Connectors: Mechanical type, cast silicon bronze, solderless exothermic-type wire terminals, and long-barrel, two-bolt connection to ground bus bar.

2.3 GROUNDING ELECTRODES

A. Ground Rods: Copper-clad steel; 5/8 by 96 inches (16 by 2400 mm) in diameter.

PART 3 - EXECUTION

3.1 APPLICATIONS

A. Conductors: Install solid conductor for No. 8 AWG and smaller, and stranded conductors for No. 6 AWG and larger unless otherwise indicated.

B. Underground Grounding Conductors: Install bare tinned-copper conductor, No. 2/0 AWG minimum.

1. Bury at least 24 inches (600 mm) below grade.

C. Isolated Grounding Conductors: Green-colored insulation with continuous yellow stripe. On feeders with isolated ground, identify grounding conductor where visible to normal inspection, with alternating bands of green and yellow tape, with at least three bands of green and two bands of yellow.

D. Grounding Bus: Install in electrical equipment rooms, as indicated.

1. Install bus on insulated spacers 2 inches (50 mm) minimum from wall, 6 inches (150 mm) above finished floor unless otherwise indicated. E. Conductor Terminations and Connections:

1. Pipe and Equipment Grounding Conductor Terminations: Bolted connectors.

2. Underground Connections: Welded connectors except at test wells and as otherwise indicated.

3. Connections to Ground Rods: Bolted connectors.

4. Connections to Structural Steel: Welded connectors.

3.2 GROUNDING UNDERGROUND DISTRIBUTION SYSTEM COMPONENTS

A. Comply with IEEE C2 grounding requirements.

B. Grounding Manholes and Handholes: Install a driven ground rod through manhole or handhole floor, close to wall, and set rod depth so 4 inches (100 mm) will extend above finished floor. If necessary, install ground rod before manhole is placed and provide No. 1/0 AWG bare, tinnedcopper conductor from ground rod into manhole through a waterproof sleeve in manhole wall. Protect ground rods passing through concrete floor with a double wrapping of pressure-sensitive insulating tape or heat-shrunk insulating sleeve from 2 inches (50 mm) above to 6 inches (150 mm) below concrete. Seal floor opening with waterproof, nonshrink grout.

C. Grounding Connections to Manhole Components: Bond exposed-metal parts such as inserts, cable racks, pulling irons, ladders, and cable shields within each manhole or handhole, to ground rod or grounding conductor. Make connections with No. 4 AWG minimum, stranded, hard-drawn copper bonding conductor. Train conductors level or plumb around corners and

fasten to manhole walls. Connect to cable armor and cable shields according to written instructions by manufacturer of splicing and termination kits.

D. Pad-Mounted Transformers and Switches: Install two ground rods and ground ring around the pad. Ground pad-mounted equipment and noncurrent-carrying metal items associated with service equipment by connecting them to underground cable and grounding electrodes. Install tinned-copper conductor not less than No. 2 AWG for ground ring and for taps to equipment grounding terminals. Bury ground ring not less than 6 inches (150 mm) from the foundation.

3.3 EQUIPMENT GROUNDING

A. Equipment Grounding Conductor Application: Comply with NFPA 70, as amended by state and local codes, for sizes and quantities of equipment grounding conductors except where specific types, larger sizes, or more conductors are indicated.

B. Install insulated equipment grounding conductors with all feeders and branch circuits.

C. Water Heater, Heat-Tracing, and Antifrost Heating Cables: Install a separate insulated equipment grounding conductor to each electric water heater and heat-tracing cable. Bond conductor to heater units, piping, connected equipment, and components.

D. Metal Poles Supporting Outdoor Lighting Fixtures: Install grounding electrode and a separate insulated equipment grounding conductor in addition to grounding conductor installed with branch-circuit conductors.

E. The ground bus of switchboards shall be connected to the main grounding electrode by means of insulated grounding electrode conductors run in intermediate metallic conduit and sized as per Code.

F. The neutral bar of each individually enclosed service switch shall be bonded to its enclosure on the line side of a removable link (included therein), and connected to the main grounding electrode by means of insulated grounding electrode conductors run in intermediate metallic conduit and sized as per Code.

G. The neutral of secondary winding of each low voltage (i.e., less than 600 volts) transformer shall be grounded to the grounding electrode as specified hereinafter by means of an insulated grounding conductor sized as per Code and run in IMC. The neutral of each transformer shall be bonded to the transformer enclosure by means of an insulated conductor sized as per code. If not factory installed the jumper shall be field installed within the transformer enclosure.

H. At each secondary voltage to secondary voltage transformer, bond the metallic water piping system to the transformer neutral at the nearest available location utilizing conductors sized equal to the grounding electrode conductor and run in conduit.

I. The grounding electrode for each low voltage (both windings 600 volts or less) transformer shall be the main water service pipe entering the building taken at a point on the street side of its main valve. Utilize a common ground clamp on the main water pipe, with means for connecting the multiple separate grounding conductors from the various transformers. In lieu of multiple separate grounding conductors, multiple connections to a "ground bus cable" may be utilized. The ground bus cable shall consist of a 500 kcmil green coded insulated copper conductor run in 1-1/2 inch (DN 41) threaded steel conduit from the street side of the main water service valve, throughout the building to all dry type transformer locations requiring grounding. The ground bus cable shall be connected to the main water pipe by means of a ground clamp of a type

specifically manufactured for the purpose. At each transformer location, establish a "grounding electrode" connection point by arranging a break in the "ground bus cable" conduit exposing the cable for not more than a twelve inch length. Ends of conduit at the break shall be equipped with bushings. The connection shall be made by means of an irreversible compression connector listed for the purpose or an exothermic weld.

J. Bond metallic conduits containing grounding electrode conductors and main bonding conductors to the ground bus service enclosure and/or grounding electrode at both ends of each run utilizing grounding bushings and jumpers. Bonding jumpers shall be sized equal to the grounding electrode conductors.

K. Provide grounding bonds for all metallic conduits of the light and power system that terminate at (or in pits below) distribution equipment for which a ground bus is specified. Accomplish this by equipping the conduits with bushings of the grounding type connected individually to the ground bus.

L. Provide supplementary ground bonding to maintain continuity of the equipment and raceway grounding system as follows:

M. Bonding jumpers shall be applied where wiring devices (receptacles and switches) are not equipped with approved self-grounding features. Include any necessary field modifications for termination of the bonding jumpers so as to insure grounding continuity.

N. Bonding jumpers shall be applied to insure that grounding continuity does not depend solely on the supporting screws fastening metallic enclosures together.

O. Include any necessary field modifications for termination of the bonding jumpers so as to insure grounding continuity.

P. Provide copper ground bus around perimeter of each room containing equipment operating in excess of 600 volts. Ground bus shall be mounted 18 inches (45 cm) above floor and routed above doors, and shall be installed on insulators. Provide a minimum of two ground connections to the main grounding electrode. Provide a minimum of two ground connections to each piece of equipment within the room. Provide ground connections from ground bus to each metallic object (doorframe, stair, mechanical duct or diffuser, etc.) located within the room. Each grounding connection shall be a 4/0, 600 volt insulated copper conductor.

Q. Provide supplementary bonding and grounding for each fountain, in accordance with the requirements of Article 680 of the latest edition of NFPA 70 (The National Electrical Code) as amended by state and local codes.

3.4 INSTALLATION

A. Grounding Conductors: Route along shortest and straightest paths possible unless otherwise indicated or required by Code. Avoid obstructing access or placing conductors where they may be subjected to strain, impact, or damage.

B. Ground Bonding Common with Lightning Protection System: Comply with NFPA 780 and UL 96 when interconnecting with lightning protection system. Bond electrical power system ground directly to lightning protection system grounding conductor at closest point to electrical service grounding electrode. Use bonding conductor sized same as system grounding electrode conductor, and install in conduit.

C. Ground Rods: Drive rods until tops are 2 inches (50 mm) below finished floor or final grade unless otherwise indicated.

1. Interconnect ground rods with grounding electrode conductor below grade and as otherwise indicated. Make connections without exposing steel or damaging coating if any.

2. For grounding electrode system, install at least three rods spaced at least one-rod length from each other and located at least the same distance from other grounding electrodes, and connect to the service grounding electrode conductor.

D. Bonding Straps and Jumpers: Install in locations accessible for inspection and maintenance except where routed through short lengths of conduit.

1. Bonding to Structure: Bond straps directly to basic structure, taking care not to penetrate any adjacent parts.

2. Bonding to Equipment Mounted on Vibration Isolation Hangers and Supports: Install bonding so vibration is not transmitted to rigidly mounted equipment.

3. Use exothermic-welded connectors for outdoor locations; if a disconnect-type connection is required, use a bolted clamp. E. Grounding and Bonding for Piping:

1. Metal Water Service Pipe: Install insulated copper grounding conductors, in conduit, from building's main service equipment, or grounding bus, to main metal water service entrances to building. Connect grounding conductors to main metal water service pipes; use a bolted clamp connector or bolt a lug-type connector to a pipe flange by using one of the lug bolts of the flange. Where a dielectric main water fitting is installed, connect grounding conductor on street side of fitting. Bond metal grounding conductor conduit or sleeve to conductor at each end.

2. Water Meter Piping: Use braided-type bonding jumpers to electrically bypass water meters. Connect to pipe with a bolted connector.

F. Bonding Interior Metal Ducts: Bond metal air ducts to equipment grounding conductors of associated fans, blowers etc.

G. Grounding for Steel Building Structure: Install a driven ground rod at base of each corner column and at intermediate exterior columns at distances not more than 60 feet (18 m) apart.

H. Ground Ring: Install a grounding conductor, electrically connected to each building structure ground rod and to each steel column indicated item, extending around the perimeter of building area or item indicated.

1. Install tinned-copper conductor not less than No. 2/0 AWG for ground ring and for taps to building steel.

2. Bury ground ring not less than 24 inches (600 mm) from building's foundation.

I. Where specifically noted on the drawings, or described hereinbefore in this Section, include insulated equipment and raceway grounding conductors run within the raceways. Where insulated equipment grounding conductors required for feeders have not been included in the

quantities of conductors indicated on the drawings, incorporate such conductors in accordance with the electrical code. Adjust conduit sizing if required.

3.5 FIELD QUALITY CONTROL

A. Tests and Inspections:

1. After installing grounding system but before permanent electrical circuits have been energized, test for compliance with requirements.

2. Inspect physical and mechanical condition. Verify tightness of accessible, bolted, electrical connections with a calibrated torque wrench according to manufacturer's written instructions.

3. Test completed grounding system at each location where a maximum ground-resistance level is specified, at service disconnect enclosure grounding terminal and at ground test wells. Make tests at ground rods before any conductors are connected.

a. Measure ground resistance no fewer than two full days after last trace of precipitation and without soil being moistened by any means other than natural drainage or seepage and without chemical treatment or other artificial means of reducing natural ground resistance.

b. Perform tests by fall-of-potential method according to IEEE 81.

4. Prepare dimensioned Drawings locating each test well, ground rod and ground-rod assembly, and other grounding electrodes. Identify each by letter in alphabetical order, and key to the record of tests and observations. Include the number of rods driven and their depth at each location, and include observations of weather and other phenomena that may affect test results. Describe measures taken to improve test results.

B. Grounding system will be considered defective if it does not pass tests and inspections.

C. Prepare test and inspection reports.

D. Report measured ground resistances that exceed the following values:

1. Power and Lighting Equipment or System: 5 ohms.

2. Manhole Grounds: 10 ohms.

E. Excessive Ground Resistance: If resistance to ground exceeds specified values, notify Architect promptly and include recommendations to reduce ground resistance.

END OF SECTION 26 05 26

X:\Specs\140143\260526 grounding and bonding for electrical systems.doc

SECTION 26 05 29 - HANGERS AND SUPPORTS FOR ELECTRICAL SYSTEMS

PART 1 - GENERAL

1.1 RELATED DOCUMENTS

A. Drawings and general provisions of the Contract, including General and Supplementary Conditions and Division 01 Specification Sections, apply to this Section.

1.2 SUMMARY

A. This Section includes the following:

1. Hangers and supports for electrical equipment and systems.

1.3 DEFINITIONS

A. RMC: Rigid metal conduit.

1.4 PERFORMANCE REQUIREMENTS

A. Delegated Design: Design supports for multiple raceways, including comprehensive engineering analysis by a qualified professional engineer, using performance requirements and design criteria indicated.

B. Design supports for multiple raceways capable of supporting combined weight of supported systems and its contents.

C. Design equipment supports capable of supporting combined operating weight of supported equipment and connected systems and components.

D. Rated Strength: Adequate in tension, shear, and pullout force to resist maximum loads calculated or imposed for this Project, with a minimum structural safety factor of five times the applied force.

1.5 ACTION SUBMITTALS

A. Product Data: For the following:

1. Steel slotted support systems.

B. Shop Drawings: Signed and sealed by a qualified professional engineer. Show fabrication and installation details and include calculations for the following:

1. Trapeze hangers. Include Product Data for components.

2. Steel slotted channel systems. Include Product Data for components.

3. Equipment supports.

1.6 QUALITY ASSURANCE

A. Comply with NFPA 70 as amended by State and Local Codes.

1.7 COORDINATION

A. Coordinate installation of roof curbs, equipment supports, and roof penetrations. These items are specified in Section 07 72 00 "Roof Accessories."

PART 2 - PRODUCTS

2.1 SUPPORT, ANCHORAGE, AND ATTACHMENT COMPONENTS

A. Steel Slotted Support Systems: Comply with MFMA-4, factory-fabricated components for field assembly.

1. Available Manufacturers: Subject to compliance with requirements, manufacturers offering products that may be incorporated into the Work include, but are not limited to, the following:

a. Allied Tube & Conduit.

b. Cooper B-Line, Inc.; a division of Cooper Industries.

c. ERICO International Corporation.

d. GS Metals Corp.

e. Thomas & Betts Corporation.

f. Unistrut; Tyco International, Ltd.

g. Wesanco, Inc.

2. Metallic Coatings: Hot-dip galvanized after fabrication and applied according to MFMA-4.

3. Nonmetallic Coatings: Manufacturer's standard PVC, polyurethane, or polyester coating applied according to MFMA-4.

4. Channel Dimensions: Selected for applicable load criteria.

B. Raceway and Cable Supports: As described in NECA 1 and NECA 101.

C. Conduit and Cable Support Devices: Steel hangers, clamps, and associated fittings, designed for types and sizes of raceway or cable to be supported.

D. Support for Conductors in Vertical Conduit: Factory-fabricated assembly consisting of threaded body and insulating wedging plug or plugs for non-armored electrical conductors or cables in riser conduits. Plugs shall have number, size, and shape of conductor gripping pieces as required to suit individual conductors or cables supported. Body shall be malleable iron.

E. Structural Steel for Fabricated Supports and Restraints: ASTM A 36/A 36M, steel plates, shapes, and bars; black and galvanized.

F. U-Channel Systems: 16-gauge steel channels, with 9/16-inch (14 mm) diameter holes, at a minimum of 8 inches (20 cm) on center, in top surface. Provide fittings and accessories that mate and match with U-channel and are of the same manufacture.

G. Mounting, Anchoring, and Attachment Components: Items for fastening electrical items or their supports to building surfaces include the following:

1. Mechanical-Expansion Anchors: Insert-wedge-type, stainless steel, for use in hardened portland cement concrete with tension, shear, and pullout capacities appropriate for supported loads and building materials in which used.

a. Available Manufacturers: Subject to compliance with requirements, manufacturers offering products that may be incorporated into the Work include, but are not limited to, the following:

1) Cooper B-Line, Inc.; a division of Cooper Industries.

2) Empire Tool and Manufacturing Co., Inc.

3) Hilti Inc.

4) ITW Ramset/Red Head; a division of Illinois Tool Works, Inc.

5) MKT Fastening, LLC.

2. Concrete Inserts: Steel or malleable-iron, slotted support system units similar to MSS Type 18; complying with MFMA-4 or MSS SP-58.

3. Clamps for Attachment to Steel Structural Elements: MSS SP-58, type suitable for attached structural element.

4. Through Bolts: Structural type, hex head, and high strength. Comply with ASTM A 325.

5. Toggle Bolts: All-steel springhead type.

6. Hanger Rods: Threaded steel.

2.2 FABRICATED METAL EQUIPMENT SUPPORT ASSEMBLIES

A. Description: Welded or bolted, structural-steel shapes, shop or field fabricated to fit dimensions of supported equipment.

B. Materials: Comply with requirements in Section 05 50 00 "Metal Fabrications" for steel shapes and plates.

PART 3 - EXECUTION

3.1 APPLICATION

A. Comply with NECA 1 and NECA 101 for application of hangers and supports for electrical equipment and systems except if requirements in this Section are stricter.

B. Maximum Support Spacing and Minimum Hanger Rod Size for Raceway: Space supports for EMT, IMC, and RMC as required by NFPA 70. Minimum rod size shall be 1/4 inch (6 mm) in diameter.

C. Multiple Raceways or Cables: Install trapeze-type supports fabricated with steel slotted or other support system, sized so capacity can be increased by at least 25 percent in future without exceeding specified design load limits.

1. Secure raceways and cables to these supports with two-bolt conduit clamps single-bolt conduit clamps.

3.2 SUPPORT INSTALLATION

A. Comply with NECA 1 and NECA 101 for installation requirements except as specified in this Article.

B. Strength of Support Assemblies: Where not indicated, select sizes of components so strength will be adequate to carry present and future static loads within specified loading limits. Minimum static design load used for strength determination shall be weight of supported components plus 200 lb (90 kg).

C. Mounting and Anchorage of Surface-Mounted Equipment and Components: Anchor and fasten electrical items and their supports to building structural elements by the following methods unless otherwise indicated by code:

1. To New Concrete: Bolt to concrete inserts.

2. To Masonry: Approved toggle-type bolts on hollow masonry units and expansion anchor fasteners on solid masonry units.

3. To Existing Concrete: Expansion anchor fasteners.

4. To Steel: Welded threaded studs complying with AWS D1.1/D1.1M, with lock washers and nuts or beam clamps (MSS Type 19, 21, 23, 25, or 27) complying with MSS SP-69.

D. Drill holes for expansion anchors in concrete at locations and to depths that avoid reinforcing bars.

E. Raceway Supports: Comply with the following requirements:

1. Conform to manufacturer's recommendations for selection and installation of supports.

2. Strength of each support shall be adequate to carry present and future load multiplied by a safety factor of at least four. Where this determination results in a safety allowance of less than 200 lbs (90 kg), provide additional strength until there is a minimum of 200 lbs (90 kg) safety allowance in the strength of each support.

3. Install individual and multiple (trapeze) raceway hangers and riser clamps as necessary to support raceways. Provide U-bolts, clamps, attachments, and other hardware necessary for hanger assembly and for securing hanger rods and conduits.

4. Support parallel runs of horizontal raceways together on trapeze-type hangers.

5. Support individual horizontal raceways by separate pipe hangers. Spring steel fasteners may be used in lieu of hangers only for 1-1/2-inch (DN 41) and smaller raceways serving lighting and receptacle branch circuits above suspended ceilings only. For hanger rods with spring steel fasteners, use 1/4 inch (6 mm) diameter or larger threaded steel. Use spring steel fasteners that are specifically designed for supporting single conduits or tubing.

6. Support exposed and concealed raceway within 1 foot (30 cm) of an unsupported box and access fittings. In horizontal runs, support at the box and access fittings may be omitted where box or access fittings are independently supported and raceway terminals are not made with chase nipples or threadless box connectors.

7. In vertical runs, arrange support so the load produced by the weight of the raceway and the enclosed conductors is carried entirely by the conduit supports with no weight load on conductor terminals.

F. Vertical Conductor Supports: Install simultaneously with installation of conductors.

G. Miscellaneous Supports: Support miscellaneous electrical components as required to produce the same structural safety factors as specified for raceway supports. Install metal channel racks for mounting cabinets, panelboards, disconnects, control enclosures, pull boxes, junction boxes, transformers, and other devices.

H. In open overhead spaces, cast boxes threaded to raceways need not be supported separately except where used for fixture support.

I. Fastening: Unless otherwise indicated, fasten electrical items and their supporting hardware securely to the building structure, including but not limited to conduits, raceways, cables, cabinets, panelboards, transformers, boxes, disconnect switches, and control components in accordance with the following:

1. Holes cut to depth of more than 1-1/2 inches (4 cm) in reinforced concrete beams or to depth of more than 3/4 inch (2 cm) in concrete shall not cut the main reinforcing bars. Fill holes that are not used.

2. Ensure that the load applied to any fastener does not exceed 25 percent of the proof test load. Use vibration- and shock- resistant fasteners for attachments to concrete slabs.

J. In general, walls and partitions are not suitable for supporting the weight of panelboards, dry type transformers, and the like. Include supporting frames or racks extending from floor slab to ceiling slab for all such items unless specifically instructed otherwise by the Architect.

K. Include supporting frames or racks for equipment, intended for vertical surface mounting, which is required in a free standing position.

L. Supporting frames or racks shall be of standard angle, standard channel or specialty support system steel members. They shall be rigidly bolted or welded together and adequately braced to form a substantial structure. Racks shall be of ample size to assure a workmanlike arrangement of all equipment mounted on them.

M. No work intended for exposed installation in damp locations is mounted directly on any building surface. In such locations, flat bar members or spacers shall be used to create a minimum of 1/4 inch (6 mm) air space between the building surfaces and the work.

N. Nothing (including outlet, pull and junction boxes and fittings) shall depend on electric conduits, raceways or cables for support except that threaded hub type fittings having a gross volume not in excess of 100 cubic inches (1600 cc) may be supported from heavy wall conduit, where the conduit in turn is securely supported from the structure within 5 inches (12 cm) of the fitting on two opposite sides.

O. Nothing shall rest on, or depend for support on, suspended ceiling media (tiles, lath, plaster, as well as splines, runners, bars and the like in the plane of the ceiling). Vertical members that suspend the ceiling (together with their horizontal bracing that occurs above the ceiling), however, may be used for support, subject to the following criteria:

1. Supporting procedures shall be in accordance with the ceiling system manufacturer's instructions.

2. Supporting members for circuitry shall be rigid. Wires may not be used for such supports.

3. The ceiling is not fire rated.

P. In conjunction with lighting fixtures or other items weighing less than 40 pounds (18 kg), the above restriction against supporting from suspended ceiling splines, runners or bars in the plane of the ceiling may be waived for ceilings that have been specifically approved for the weight and arrangement of fixtures being applied. Any support members, mechanical fastening means (i.e., bolts, screws or rivets), or other appurtenances, however, required to tie in or adapt to the fixtures and their ceiling opening frames (if any) to the ceiling in the approved manner shall be included as part of the electric work.

Q. As a minimum procedure, support surface or pendant mounted lighting fixture:

1. From its outlet box by means of an interposed metal strap, where weight is less than 5 pounds (2 kg).

2. From its outlet box by means of a hickey or other direct threaded connection, where weight is from 5 pounds (2 kg) to 50 pounds (20 kg).

3. Directly from structural slab, deck, where weight exceeds 50 pounds (20 kg).

4. Directly from structural slabs, decks or framing members where weight is more than 80 pounds (35 kg).

R. Include in the electric work channel sills or skids for leveling and support of all floor mounted electrical equipment.

S. Where permitted loading is exceeded by direct application of electrical equipment to a slab or deck, include in the electric work proper dunnage as required to distribute the weight in a safe manner.

3.3 INSTALLATION OF FABRICATED METAL SUPPORTS

A. Cut, fit, and place miscellaneous metal supports accurately in location, alignment, and elevation to support and anchor electrical materials and equipment. B. Field Welding: Comply with AWS D1.1/D1.1M.

3.4 CONCRETE BASES

A. All equipment, including but not limited to Switchboards, shall be provided with foundations.

B. Furnish shop drawings showing adequate concrete reinforcing steel details and templates for all concrete foundations and supports, and all required anchor bolts and other appurtenances necessary for the proper installation of this equipment. All concrete work shall be shown in detail on the shop drawings, prepared by this trade.

C. Construct concrete bases of dimensions indicated but not less than 4 inches (100 mm) larger in both directions than supported unit, and so anchors will be a minimum of 10 bolt diameters from edge of the base.

D. Use 3000-psi (20.7-MPa), 28-day compressive-strength concrete. Concrete materials, reinforcement, and placement requirements are specified in Section 03 30 00 "Cast-in-Place Concrete." and Section 03 30 53 "Miscellaneous Cast-in-Place Concrete." E. Anchor equipment to concrete base.

1. Place and secure anchorage devices. Use supported equipment manufacturer's setting drawings, templates, diagrams, instructions, and directions furnished with items to be embedded.

2. Install anchor bolts to elevations required for proper attachment to supported equipment.

3. Install anchor bolts according to anchor-bolt manufacturer's written instructions.

END OF SECTION 26 05 29

X:\Specs\140143\260529 hangers and supports for electrical systems.doc

SECTION 26 05 33 - RACEWAYS AND BOXES FOR ELECTRICAL SYSTEMS

PART 1 - GENERAL

1.1 RELATED DOCUMENTS

A. Drawings and general provisions of the Contract, including General and Supplementary Conditions apply to this Section.

1.2 SUMMARY

A. Section Includes:

1. Metal conduits, tubing, and fittings.

2. Metal wireways and auxiliary gutters.

3. Surface raceways.

4. Boxes, enclosures, and cabinets.

5. Handholes and boxes for exterior underground cabling.

1.3 DEFINITIONS

A. GRC: Galvanized rigid steel conduit.

1.4 ACTION SUBMITTALS

A. Product Data: For surface raceways, wireways and fittings, hinged-cover enclosures, and cabinets.

B. Shop Drawings: For custom enclosures and cabinets. Include plans, elevations, sections, and attachment details.

C. Samples: For wireways nonmetallic wireways and surface raceways and for each color and texture specified, 12 inches (300 mm) long.

1.5 INFORMATIONAL SUBMITTALS

A. Coordination Drawings: Conduit routing plans, drawn to scale, on which the following items are shown and coordinated with each other, using input from installers of items involved: B. Source quality-control reports.

PART 2 - PRODUCTS

2.1 METAL CONDUITS, TUBING, AND FITTINGS

A. Manufacturers: Subject to compliance with requirements, available manufacturers offering products that may be incorporated into the Work include, but are not limited to, the following:

1. Allied Tube & Conduit; a Tyco International Ltd. Co.

2. O-Z/Gedney; a brand of EGS Electrical Group.

3. Picoma Industries, a subsidiary of Mueller Water Products, Inc.

4. Republic Conduit.

5. Robroy Industries.

6. Southwire Company.

7. Thomas & Betts Corporation.

8. Western Tube and Conduit Corporation.

9. Wheatland Tube Company; a division of John Maneely Company.

B. Listing and Labeling: Metal conduits, tubing, and fittings shall be listed and labeled as defined in NFPA 70, by a qualified testing agency, and marked for intended location and application. C. GRC: Comply with ANSI C80.1 and UL 6.

D. PVC-Coated Steel Conduit: PVC-coated rigid steel conduit or IMC.

1. Comply with NEMA RN 1.

2. Coating Thickness: 0.040 inch (1 mm), minimum.

E. LFMC: Flexible steel conduit with PVC jacket and complying with UL 360.

F. Fittings for Metal Conduit: Comply with NEMA FB 1 and UL 514B.

1. Expansion Fittings: PVC or steel to match conduit type, complying with UL 651, rated for environmental conditions where installed, and including flexible external bonding jumper.

2. Coating for Fittings for PVC-Coated Conduit: Minimum thickness of 0.040 inch (1 mm), with overlapping sleeves protecting threaded joints.

G. Joint Compound for GRC: Approved, as defined in NFPA 70, by authorities having jurisdiction for use in conduit assemblies, and compounded for use to lubricate and protect threaded conduit joints from corrosion and to enhance their conductivity.

2.2 SURFACE RACEWAYS

A. Listing and Labeling: Surface raceways and tele-power poles shall be listed and labeled as defined in NFPA 70, by a qualified testing agency, and marked for intended location and application.

B. Surface Metal Raceways: Galvanized steel with snap-on covers complying with UL 5.
Manufacturer's standard enamel finish in color selected by Architect.

C. General Requirements for Boxes, Enclosures, and Cabinets: Boxes, enclosures, and cabinets installed in wet locations shall be listed for use in wet locations.

D. Cast-Metal Outlet and Device Boxes: Comply with NEMA FB 1, ferrous alloy except us aluminum with ARC, Type FD, with gasketed cover.

E. Metal Floor Boxes:

1. Material: Cast metal.

2. Type: Fully adjustable.

3. Shape: Rectangular.

4. Listing and Labeling: Metal floor boxes shall be listed and labeled as defined in NFPA 70, by a qualified testing agency, and marked for intended location and application.

F. Luminaire Outlet Boxes: Nonadjustable, designed for attachment of luminaire weighing 50 lb (23 kg). Outlet boxes designed for attachment of luminaires weighing more than 50 lb (23 kg) shall be listed and marked for the maximum allowable weight. G. Gangable boxes are prohibited.

H. Hinged-Cover Enclosures: Comply with UL 50 and NEMA 250, Type 1, Type 3R, or Type 4 as applicable with continuous-hinge cover with flush latch unless otherwise indicated.

1. Metal Enclosures: Steel, finished inside and out with manufacturer's standard enamel.

2. Interior Panels: Steel; all sides finished with manufacturer's standard

enamel. I. Cabinets:

1. NEMA 250, Type 3R or NEMA 6P as applicable galvanized-steel box with removable interior panel and removable front, finished inside and out with manufacturer's standard enamel.

2. Hinged door in front cover with flush latch and concealed hinge.

3. Key latch to match panelboards.

4. Metal barriers to separate wiring of different systems and voltage.

5. Accessory feet where required for freestanding equipment.

6. Nonmetallic cabinets shall be listed and labeled as defined in NFPA 70, by a qualified testing agency, and marked for intended location and application.

2.3 HANDHOLES AND BOXES FOR EXTERIOR UNDERGROUND WIRING

A. General Requirements for Handholes and Boxes:

1. Boxes and handholes for use in underground systems shall be designed and identified as defined in NFPA 70, for intended location and application.

2. Boxes installed in wet areas shall be listed and labeled as defined in NFPA 70, by a qualified testing agency, and marked for intended location and application.

PART 3 - EXECUTION

3.1 RACEWAY APPLICATION

A. Outdoors: Apply raceway products as specified below unless otherwise indicated:

1. Exposed Conduit: GRC.

2. Concealed Conduit, Aboveground: GRC.

3. Underground Conduit: RGC, PVC coated RGC conduit.

B. Indoors: Apply raceway products as specified below unless otherwise indicated:

1. Exposed in dry location and not Subject to Physical Damage: RGC.

2. Exposed and Subject to Severe Physical Damage: GRC.

3. Connection to Vibrating Equipment (Including Transformers and Hydraulic, Pneumatic, Electric Solenoid, or Motor-Driven Equipment): LFMC in damp or wet locations.

4. Damp or Wet Locations: GRC.

5. Boxes and Enclosures: NEMA 250, Type 1, except use NEMA 250, Type 4 stainless steel in damp or wet locations.

C. Minimum Raceway Size: 3/4-inch (21-mm) trade size.

D. Raceway Fittings: Compatible with raceways and suitable for use and location.

1. Rigid and Intermediate Steel Conduit: Use threaded rigid steel conduit fittings unless otherwise indicated. Comply with NEMA FB 2.10.

2. PVC Externally Coated, Rigid Steel Conduits: Use only fittings listed for use with this type of conduit. Patch and seal all joints, nicks, and scrapes in PVC coating after installing conduits and fittings. Use sealant recommended by fitting manufacturer and apply in thickness and number of coats recommended by manufacturer.

3. Flexible Conduit: Use only fittings listed for use with flexible conduit. Comply with NEMA FB 2.20.

a. Electric work located in slabs, walls or suspended ceilings which bound on a space defined as a hazardous location shall meet the hazardous location requirements if it enters into, or opens into, the hazardous location in any way.

2. The following shall be treated as damp or wet locations within building confines, regardless of whether or not a high ambient moisture level is found to exist:

a. Spaces where any designations indicating weatherproof (WP) or vaporproof (VP) appear on the drawings.

b. Below waterproofing in slabs applied directly on grade.

3.2 INSTALLATION

A. Comply with NECA 1 and NECA 101 for installation requirements except where requirements on Drawings or in this article are stricter. Comply with NECA 102 for aluminum conduits. Comply with NFPA 70 limitations for types of raceways allowed in specific occupancies and number of floors.

B. Keep raceways at least 6 inches (150 mm) away from parallel runs of flues and steam or hotwater pipes. Install horizontal raceway runs above water and steam piping. C. Complete raceway installation before starting conductor installation.

D. Comply with requirements in Section 26 05 29 "Hangers and Supports for Electrical Systems" for hangers and supports.

E. Install temporary closures to prevent foreign matter from entering raceway.

F. Protect stub-ups from damage where conduits rise through floor slabs. Arrange stub-ups so curved portions of bends are not visible above finished slab.

G. Install no more than the equivalent of four 90-degree bends in any conduit run except for control wiring conduits, for which fewer bends are allowed. Support within 12 inches (300 mm) of changes in direction.

H. Install exposed raceways parallel to or at right angles to nearby surfaces or structural members, and follow the surface contours as much possible.

1. Run parallel or banked raceways together on common supports.

2. Make parallel bends in parallel or banked runs. Use factory elbows only where elbows can be installed parallel; otherwise, provide field bends for parallel raceways.

I. Join raceways with fittings designed and approved for the purpose and make joints tight.

1. Use insulating bushings to protect conductors.

J. Install conduits parallel or perpendicular to building lines.

K. Support conduit within 12 inches (300 mm)of enclosures to which attached.

L. Raceways Embedded in Slabs:

1. Embedment of circuitry in field poured concrete slabs and fill will be permitted subject to the approval of the structural engineer, compliance with the "pour schedule" established for the project, and to the following criteria:

2. They shall be routed in such a manner as to coordinate with the structural requirements of the building. Submit proposed routing to structural engineer for approval. Raceways proposed to be embedded in concrete which are not approved by the structural engineer shall be installed in another manner (in accordance with these specifications).

M. Threaded Conduit Joints, Exposed to Wet, Damp, Corrosive, or Outdoor Conditions: Apply listed compound to threads of raceway and fittings before making up joints. Follow compound manufacturer's written instructions.

N. Raceway Terminations at Locations Subject to Moisture or Vibration: Use insulating bushings to protect conductors including conductors smaller than No. 4 AWG.

O. Terminate threaded conduits into threaded hubs or with locknuts on inside and outside of boxes or cabinets. Install bushings on conduits up to 1-1/4-inch (35mm) trade size and insulated throat metal bushings on 1-1/2-inch (41-mm) trade size and larger conduits terminated with locknuts. Install insulated throat metal grounding bushings on service conduits.

P. Install raceways square to the enclosure and terminate at enclosures with locknuts. Install the locknuts with dished part against the box. Install locknuts hand tight plus 1/4 turn more.

Q. Do not rely on locknuts to penetrate nonconductive coatings on enclosures. Remove coatings in the locknut area prior to assembling conduit to enclosure to assure a continuous ground path.

R. Cut conduit perpendicular to the length. For conduits 2-inch (53-mm) trade size and larger, use roll cutter or a guide to make cut straight and perpendicular to the length.

S. Install pull wires in empty raceways. Use polypropylene or monofilament plastic line with not less than 200-lb (90-kg) tensile strength. Leave at least 12 inches (300 mm) of slack at each end of pull wire. Cap underground raceways designated as spare above grade alongside raceways in use.

T. Telephone and Signal System Raceways 2-Inch Trade Size (DN 53) and Smaller: In addition to the above requirements, install in maximum lengths of 100 feet (30 m) and with a maximum of two 90-degree bends or equivalent. Install pull or junction boxes where necessary to comply with these requirements. Pull or junction boxes shall be sized in accordance with ANSI/EIA/TIA569A guidelines.

U. Surface Raceways:

1. Install surface raceway with a minimum 2-inch (50-mm)radius control at bend points.

2. Secure surface raceway with screws or other anchor-type devices at intervals not exceeding 48 inches (1200 mm) and with no less than two supports per straight raceway section. Support surface raceway according to manufacturer's written instructions. Tape and glue are not acceptable support methods.

V. Install raceway sealing fittings at accessible locations according to NFPA 70 and fill them with listed sealing compound. For concealed raceways, install each fitting in a flush steel box with a blank cover plate having a finish similar to that of adjacent plates or surfaces. Install raceway sealing fittings according to NFPA 70.

W. Install devices to seal raceway interiors at accessible locations. Locate seals so no fittings or boxes are between the seal and the following changes of environments. Seal the interior of all raceways at the following points:

1. Where conduits pass from warm to cold locations, such as boundaries of refrigerated spaces.

2. Where an underground service raceway enters a building or structure.

3. Where otherwise required by NFPA 70.

X. Expansion-Joint Fittings:

1. Install in each run of aboveground RNC that is located where environmental temperature change may exceed 30 deg F (17 deg C) and that has straight-run length that exceeds 25 feet (7.6 m). Install in each run of aboveground RMC conduit that is located where environmental temperature change may exceed 100 deg F (55 deg C) and that has straight-run length that exceeds 100 feet (30 m).

2. Install type and quantity of fittings that accommodate temperature change listed for each of the following locations:

a. Outdoor Locations Not Exposed to Direct Sunlight: 125 deg F (70 deg C) temperature change.

b. Outdoor Locations Exposed to Direct Sunlight: 155 deg F (86 deg C) temperature change.

c. Indoor Spaces Connected with Outdoors without Physical Separation: 125 deg F (70 deg C) temperature change.

d. Attics: 135 deg F (75 deg C) temperature change.

3. Install fitting(s) that provide expansion and contraction for at least 0.00041 inch per foot of length of straight run per deg F (0.06 mm per meter of length of straight run per deg C) of temperature change for PVC conduits. Install fitting(s) that provide expansion and contraction for at least 0.000078 inch per foot of length of straight run per deg F (0.0115 mm per meter of length of straight run per deg C) of temperature change for metal conduits.

4. Install expansion fittings at all locations where conduits cross building or structure expansion joints.

5. Install each expansion-joint fitting with position, mounting, and piston setting selected according to manufacturer's written instructions for conditions at specific location at time of installation. Install conduit supports to allow for expansion movement.

Y. Flexible Conduit Connections: Comply with NEMA RV 3. Use a maximum of 72 inches (1830 mm) of flexible conduit for equipment subject to vibration, noise transmission, or movement; and for transformers and motors.

1. Use LFMC in damp or wet locations.

2. Install separate ground conductor across flexible connections.

3.3 INSTALLING JUNCTION, PULL AND OUTLET BOXES:

A. Apply junction and pull boxes in accordance with the following:-

1. Include pull boxes in long straight runs of raceway to assure that cables are not damaged when they are pulled in.

2. Include junction and pull boxes to assure a neat and workmanlike installation of raceways.

3. Include junction and pull boxes to fulfill requirements pertaining to the limitations to the number of bends permitted in raceway between cable access points, the accessibility of cable joints and splices, and the application of cable supports.

4. Where the wires and cables following the same routing are indicated as running through separate pull boxes, it shall be understood that a segregation of the wires and cables is required. Separately indicated pull boxes may be incorporated into single boxes on condition that segregation is maintained by barriers of the type hereinafter specified.

5. Include all required junction and pull boxes regardless of indications on the drawings (which, due to symbolic methods of notation, may omit to show some of them).

B. Apply outlet boxes in accordance with the following:-

1. Unless noted below or otherwise specifically indicated, include a separate outlet box for each individual wiring device, lighting fixture and signal or communication system outlet component. Outlet boxes supplied attached to lighting fixtures shall not be used as replacements for the boxes specified herein unless they are specifically rated to accept "through circuit" building wires.

2. Include all required outlet boxes regardless of indications on the drawings (which due to symbolic methods of notation, may omit to show some of them).

C. Install junction boxes, pull boxes and outlet boxes in accordance with the following:1. Exclude

surface mounted outlet boxes in conjunction with concealed circuitry.

2. Exclude unused circuitry openings in junction and pull boxes. In larger boxes each such opening shall be closed with a galvanized sheet steel plate fastened with a continuous weld all around. In small outlet type boxes, utilize plugs as specified for such boxes.

3. Close up all unused circuitry openings in outlet boxes. Unused openings in cast boxes shall be closed with approved cast metal threaded plugs. Unused openings in sheet metal boxes shall be closed with sheet metal knock-out plugs.

4. Outlet boxes for switches shall be located at the strike side of doors. Indicated door swings are subject to field change. Outlet boxes shall be located on the basis of final door swing arrangements.

3.4 MOUNTING HEIGHTS:

A. Heights of all wall mounted outlets and equipment shall be in accordance with the following list. (Dimensions are above finished floor unless noted.)

1. Receptacle or telephone outlet in mechanical spaces, electric switchboard rooms, electric closets -- 60 inches (150 cm) to centerline.

2. Toggle switch outlet in field constructed wall partition or column -- 46 inches (117 cm) to centerline.

3. Bracket lighting outlets, except for "over door" -- 90 inches (228 cm) to centerline.

4. Bracket lighting outlet over door -- as required to center outlet between top surface of door lintel and underside of ceiling.

B. Fasten junction and pull boxes to or support from building structure. Do not support boxes by conduits.

C. Set metal floor boxes level and flush with finished floor surface.

D. Set nonmetallic floor boxes level. Trim after installation to fit flush with finished floor surface.

3.5 SLEEVE AND SLEEVE-SEAL INSTALLATION FOR ELECTRICAL PENETRATIONS

A. Install sleeves and sleeve seals at penetrations of exterior floor and wall assemblies.

3.6 FIRESTOPPING

A. Install firestopping at penetrations of fire-rated floor and wall assemblies.

3.7 PROTECTION

A. Protect coatings, finishes, and cabinets from damage and deterioration.

1. Repair damage to galvanized finishes with zinc-rich paint recommended by manufacturer.

2. Repair damage to PVC coatings or paint finishes with matching touchup coating recommended by manufacturer.

END OF SECTION 26 05 33

X:\Specs\140143\260533 raceways and boxes for electrical systems.doc

SECTION 26 05 44 - SLEEVES AND SLEEVE SEALS FOR ELECTRICAL RACEWAYS AND CABLING

PART 1 - GENERAL

1.1 RELATED DOCUMENTS

A. Drawings and general provisions of the Contract, including General and Supplementary Conditions apply to this Section.

1.2 SUMMARY

A. Section Includes:

1. Sleeves for raceway and cable penetration of non-fire-rated construction walls and floors.

2. Sleeve-seal systems.

3. Sleeve-seal fittings.

4. Silicone sealants.

1.3 ACTION SUBMITTALS

A. Product Data: For each type of product.

PART 2 - PRODUCTS

2.1 SLEEVES

A. Wall Sleeves:

1. Steel Pipe Sleeves: ASTM A 53/A 53M, Type E, Grade B, Schedule 40, zinc coated, plain ends.

B. Sleeves for Conduits Penetrating Non-Fire-Rated Gypsum Board Assemblies: Galvanized-steel sheet; 0.0239-inch (0.6-mm) minimum thickness; round tube closed with welded longitudinal joint, with tabs for screw-fastening the sleeve to the board.

C. Molded-PE or -PP Sleeves: Removable, tapered-cup shaped, and smooth outer surface with nailing flange for attaching to wooden forms. D. Sleeves for Rectangular Openings:

1. Material: Galvanized sheet steel.

2. Minimum Metal Thickness:

a. For sleeve cross-section rectangle perimeter less than 50 inches (1270 mm) and with no side larger than 16 inches (400 mm), thickness shall be 0.052 inch (1.3 mm).

b. For sleeve cross-section rectangle perimeter 50 inches (1270 mm) or more and one or more sides larger than 16 inches (400 mm), thickness shall be 0.138 inch (3.5 mm).

2.2 SLEEVE-SEAL SYSTEMS

A. Description: Modular sealing device, designed for field assembly, to fill annular space between sleeve and raceway or cable.

1. Manufacturers: Subject to compliance with requirements, available manufacturers offering products that may be incorporated into the Work include, but are not limited to, the following:

a. Advance Products & Systems, Inc.

b. CALPICO, Inc.

c. Metraflex Company (The).

d. Pipeline Seal and Insulator, Inc.

e. Proco Products, Inc.

2. Sealing Elements: EPDM or Nitrile (Buna N) rubber interlocking links shaped to fit surface of pipe. Include type and number required for pipe material and size of pipe.

3. Pressure Plates: Stainless steel.

4. Connecting Bolts and Nuts: Stainless Steel of length required to secure pressure plates to sealing elements.

2.3 SLEEVE-SEAL FITTINGS

A. Description: Manufactured plastic, sleeve-type, waterstop assembly made for embedding in concrete slab or wall. Unit shall have plastic or rubber waterstop collar with center opening to match piping OD.

1. Manufacturers: Subject to compliance with requirements, available manufacturers offering products that may be incorporated into the Work include, but are not limited to, the following:

a. Presealed Systems.

2.4 SILICONE SEALANTS

A. Silicone Sealants: Single-component, silicone-based, neutral-curing elastomeric sealants of grade indicated below.

1. Grade: Pourable (self-leveling) formulation for openings in floors and other horizontal surfaces that are not fire rated.

B. Silicone Foams: Multicomponent, silicone-based liquid elastomers that, when mixed, expand and cure in place to produce a flexible, nonshrinking foam.

PART 3 - EXECUTION

3.1 SLEEVE INSTALLATION FOR NON-FIRE-RATED ELECTRICAL PENETRATIONS A.

Comply with NECA 1.

B. Comply with NEMA VE 2 for cable tray and cable penetrations.

C. Sleeves for Conduits Penetrating Above-Grade Non-Fire-Rated Concrete and Masonry-Unit Floors and Walls:

1. Interior Penetrations of Non-Fire-Rated Walls and Floors:

a. Seal annular space between sleeve and raceway or cable, using joint sealant appropriate for size, depth, and location of joint. Comply with requirements in Section 07 92 00 "Joint Sealants."

b. Seal space outside of sleeves with mortar or grout. Pack sealing material solidly between sleeve and wall so no voids remain. Tool exposed surfaces smooth; protect material while curing.

2. Use pipe sleeves unless penetration arrangement requires rectangular sleeved opening.

3. Size pipe sleeves to provide 1/4-inch (6.4-mm) annular clear space between sleeve and raceway or cable unless sleeve seal is to be installed or unless seismic criteria require different clearance.

4. Install sleeves for wall penetrations unless core-drilled holes or formed openings are used. Install sleeves during erection of walls. Cut sleeves to length for mounting flush with both surfaces of walls. Deburr after cutting.

5. Install sleeves for floor penetrations. Extend sleeves installed in floors 2 inches (50 mm) above finished floor level. Install sleeves during erection of floors.

D. Sleeves for Conduits Penetrating Non-Fire-Rated Gypsum Board Assemblies:

1. Use circular metal sleeves unless penetration arrangement requires rectangular sleeved opening.

2. Seal space outside of sleeves with approved joint compound for gypsum board assemblies.

E. Roof-Penetration Sleeves: Seal penetration of individual raceways and cables with flexible boottype flashing units applied in coordination with roofing work.

F. Aboveground, Exterior-Wall Penetrations: Seal penetrations using steel pipe sleeves and mechanical sleeve seals. Select sleeve size to allow for 1-inch (25-mm) annular clear space between pipe and sleeve for installing mechanical sleeve seals.

G. Underground, Exterior-Wall and Floor Penetrations: Install cast-iron pipe sleeves. Size sleeves to allow for 1-inch (25-mm) annular clear space between raceway or cable and sleeve for installing sleeve-seal system.

3.2 SLEEVE-SEAL-SYSTEM INSTALLATION

A. Install sleeve-seal systems in sleeves in exterior concrete walls and slabs-on-grade at raceway entries into building.

B. Install type and number of sealing elements recommended by manufacturer for raceway or cable material and size. Position raceway or cable in center of sleeve. Assemble mechanical sleeve seals and install in annular space between raceway or cable and sleeve. Tighten bolts against pressure plates that cause sealing elements to expand and make watertight seal.

3.3 SLEEVE-SEAL-FITTING INSTALLATION

A. Install sleeve-seal fittings in new walls and slabs as they are constructed.

B. Assemble fitting components of length to be flush with both surfaces of concrete slabs and walls. Position waterstop flange to be centered in concrete slab or wall. C. Secure nailing flanges to concrete forms.

D. Using grout, seal the space around outside of sleeve-seal fittings.

END OF SECTION 26 05 44

X:\Specs\140143\260544 sleeves and sleeve seals for electrical raceways and cabling.doc

SECTION 26 05 53 - IDENTIFICATION FOR ELECTRICAL SYSTEMS

PART 1 - GENERAL

1.1 RELATED DOCUMENTS

A. Drawings and general provisions of the Contract, including General and Supplementary Conditions and Division 01 Specification Sections, apply to this Section.

1.2 SUMMARY

A. Section Includes:

1. Identification for raceways.
2. Identification of power and control cables.
3. Identification for conductors.
4. Underground-line warning tape.
5. Warning labels and signs.
6. Instruction signs.
7. Equipment identification labels.
8. Miscellaneous identification products.

1.3 ACTION SUBMITTALS

A. Product Data: For each electrical identification product indicated.

B. Samples: For each type of label and sign to illustrate size, colors, lettering style, mounting provisions, and graphic features of identification products.

C. Identification Schedule: An index of nomenclature of electrical equipment and system components used in identification signs and labels.

1.4 QUALITY ASSURANCE

A. Comply with ANSI A13.1.

B. Comply with NFPA 70 as amended by State and Local Codes.

C. Comply with 29 CFR 1910.144 and 29 CFR 1910.145.

D. Comply with ANSI Z535.4 for safety signs and labels.

E. Adhesive-attached labeling materials, including label stocks, laminating adhesives, and inks used by label printers, shall comply with UL 969.

1.5 COORDINATION

A. Coordinate identification names, abbreviations, colors, and other features with requirements in other Sections requiring identification applications, Drawings, Shop Drawings, manufacturer's wiring diagrams, and the Operation and Maintenance Manual; and with those required by codes, standards, and 29 CFR 1910.145. Use consistent designations throughout Project.

B. Coordinate installation of identifying devices with completion of covering and painting of surfaces where devices are to be applied.

C. Coordinate installation of identifying devices with location of access panels and doors.

D. Install identifying devices before installing acoustical ceilings and similar concealment.

PART 2 - PRODUCTS

2.1 POWER AND CONTROL RACEWAY IDENTIFICATION MATERIALS

A. Comply with ANSI A13.1 for minimum size of letters for legend and for minimum length of color field for each raceway size.

B. Colors for Raceways Carrying Circuits at 600 V or Less:

1. Black letters on an orange field.

2. Legend: Indicate voltage and system or

service type. C. Colors for Raceways Carrying Circuits

at More Than 600 V:

1. Black letters on an orange field.

2. Legend: "DANGER CONCEALED HIGH VOLTAGE WIRING" with 3-inch (75-mm) high letters on 20-inch (500-mm) centers.

D. Self-Adhesive Vinyl Labels for Raceways Carrying Circuits at 600 V or Less: Preprinted, flexible label laminated with a clear, weather- and chemical-resistant coating and matching wraparound clear adhesive tape for securing ends of legend label.

E. Snap-Around Labels for Raceways Carrying Circuits at 600 V or Less: Slit, pretensioned, flexible, preprinted, color-coded acrylic sleeve, with diameter sized to suit diameter of raceway or cable it identifies and to stay in place by gripping action.

F. Snap-Around, Color-Coding Bands for Raceways Carrying Circuits at 600 V or Less: Slit, pretensioned, flexible, solid-colored acrylic sleeve, 2 inches (50 mm) long, with diameter sized to suit diameter of raceway or cable it identifies and to stay in place by gripping action.

G. Tape and Stencil for Raceways Carrying Circuits More Than 600 V: 4-inch- (100-mm-) wide black stripes on 10-inch (250-mm) centers diagonally over orange background that extends full length of raceway or duct and is 12 inches (300 mm) wide. Stop stripes at legends.

H. Metal Tags: Brass or aluminum, 2 by 2 by 0.05 inch (50 by 50 by 1.3 mm), with stamped legend, punched for use with self-locking cable tie fastener.

2.2 POWER AND CONTROL CABLE IDENTIFICATION MATERIALS

A. Comply with ANSI A13.1 for minimum size of letters for legend and for minimum length of color field for each cable size.

B. Vinyl Labels: Preprinted, flexible label laminated with a clear, weather- and chemical-resistant coating and matching wraparound clear adhesive tape for securing ends of legend label.

C. Self-Adhesive, Self-Laminating Polyester Labels: Preprinted, 3-mil- (0.08-mm-) thick flexible label with acrylic pressure-sensitive adhesive that provides a clear, weather- and chemicalresistant, self-laminating, protective shield over the legend. Labels sized to fit the cable diameter such that the clear shield overlaps the entire printed legend.

D. Heat-Shrink Preprinted Tubes: Flame-retardant polyolefin tube with machine-printed identification label. Sized to suit diameter of and shrinks to fit firmly around cable it identifies. Full shrink recovery at a maximum of 200 deg F (93 deg C). Comply with UL 224.

E. Metal Tags: Brass or aluminum, 2 by 2 by 0.05 inch (50 by 50 by 1.3 mm), with stamped legend, punched for use with self-locking cable tie fastener.

F. Write-On Tags: Polyester tag, 0.015 inch (0.38 mm) thick, with corrosion-resistant grommet and cable tie for attachment to conductor or cable.

1. Marker for Tags: Permanent, waterproof, black ink marker recommended by tag manufacturer.

G. Snap-Around Labels: Slit, pretensioned, flexible, preprinted, color-coded acrylic sleeve, with diameter sized to suit diameter of cable it identifies and to stay in place by gripping action.

H. Snap-Around, Color-Coding Bands: Slit, pretensioned, flexible, solid-colored acrylic sleeve, 2 inches (50 mm) long, with diameter sized to suit diameter of cable it identifies and to stay in place by gripping action.

2.3 CONDUCTOR IDENTIFICATION MATERIALS

A. Color-Coding Conductor Tape: Colored, self-adhesive vinyl tape not less than 3 mils (0.08 mm) thick by 1 to 2 inches (25 to 50 mm) wide.

B. Self-Adhesive, Self-Laminating Polyester Labels: Preprinted, 3-mil- (0.08-mm-) thick flexible label with acrylic pressure-sensitive adhesive that provides a clear, weather- and chemicalresistant, self-laminating, protective shield over the legend. Labels sized to fit the conductor diameter such that the clear shield overlaps the entire printed legend.

C. Snap-Around Labels: Slit, pretensioned, flexible, preprinted, color-coded acrylic sleeve, with diameter sized to suit diameter of conductor it identifies and to stay in place by gripping action.

D. Snap-Around, Color-Coding Bands: Slit, pretensioned, flexible, solid-colored acrylic sleeve with diameter sized to suit diameter of conductor it identifies and to stay in place by gripping action.

E. Heat-Shrink Preprinted Tubes: Flame-retardant polyolefin tube with machine-printed identification label. Sized to suit diameter of and shrinks to fit firmly around conductor it identifies. Full shrink recovery at a maximum of 200 deg F (93 deg C). Comply with UL 224.

F. Marker Tapes: Vinyl or vinyl-cloth, self-adhesive wraparound type, with circuit identification legend machine printed by thermal transfer or equivalent process.

G. Write-On Tags: Polyester tag, 0.015 inch (0.38 mm) thick, with corrosion-resistant grommet and cable tie for attachment to conductor or cable.

1. Labels for Tags: Self-adhesive label, machine-printed with permanent, waterproof, black ink recommended by printer manufacturer, sized for attachment to tag.

2.4 FLOOR MARKING TAPE

A. 2-inch- (50-mm-) wide, 5-mil (0.125-mm) pressure-sensitive vinyl tape, with yellow and black stripes and clear vinyl overlay.

2.5UNDERGROUND-LINE WARNING TAPE A.

Tape:

1. Recommended by manufacturer for the method of installation and suitable to identify and locate underground electrical and communications utility lines.

2. Printing on tape shall be permanent and shall not be damaged by burial operations.

3. Tape material and ink shall be chemically inert, and not subject to degrading when exposed to acids, alkalis, and other destructive substances commonly found in soils. B.

Color and Printing:

1. Comply with ANSI Z535.1 through ANSI Z535.5.

2. Inscriptions for Red-Colored Tapes: ELECTRIC LINE, HIGH VOLTAGE.

3. Inscriptions for Orange-Colored Tapes: TELEPHONE CABLE, CATV CABLE, COMMUNICATIONS CABLE, OPTICAL FIBER CABLE.

C. Detectable three-layer laminate, consisting of a printed pigmented polyolefin film, a solid aluminum-foil core, and a clear protective film that allows inspection of the continuity of the conductive core, bright-colored, continuous-printed on one side with the inscription of the utility, compounded for direct-burial service.

1. Overall Thickness: 5 mils (0.125 mm).

2. Foil Core Thickness: 0.35 mil (0.00889 mm).

3. Weight: 28 lb/1000 sq. ft. (13.7 kg/100 sq. m).

4. 3-Inch (75-mm) Tensile According to ASTM D 882: 70 lbf (311.3 N), and 4600 psi (31.7 MPa).

2.6 WARNING LABELS AND SIGNS

A. Comply with NFPA 70 and 29 CFR 1910.145.

B. Self-Adhesive Warning Labels: Factory-printed, multicolor, pressure-sensitive adhesive labels, configured for display on front cover, door, or other access to equipment unless otherwise indicated.

C. Baked-Enamel Warning Signs:

1. Preprinted aluminum signs, punched or drilled for fasteners, with colors, legend, and size required for application.

2. 1/4-inch (6.4-mm) grommets in corners for mounting.

3. Nominal size, 7 by 10 inches (180 by 250 mm). D. Metal-Backed, Butyrate

Warning Signs:

1. Weather-resistant, nonfading, preprinted, cellulose-acetate butyrate signs with 0.0396inch (1-mm) galvanized-steel backing; and with colors, legend, and size required for application.

2. 1/4-inch (6.4-mm) grommets in corners for mounting.

3. Nominal size, 10 by 14 inches (250 by 360 mm).

E. Warning label and sign shall include, but are not limited to, the following legends:

1. Multiple Power Source Warning: "DANGER - ELECTRICAL SHOCK HAZARD EQUIPMENT HAS MULTIPLE POWER SOURCES."

2. Workspace Clearance Warning: "WARNING - OSHA REGULATION - AREA IN FRONT OF ELECTRICAL EQUIPMENT MUST BE KEPT CLEAR FOR 48 INCHES (1200 MM)." Adjust clearance dimensions as required for system voltage and equipment configuration.

3. Arc Flash Warning: “POTENTIAL ARC FLASH HAZARD - APPROPRIATE PERSONAL PROTECTIVE EQUIPMENT AND TOOLS REQUIRED WHEN WORKING ON THIS EQUIPMENT.”

2.7 INSTRUCTION SIGNS

A. Engraved, laminated acrylic or melamine plastic, minimum 1/16 inch (1.6 mm) thick for signs up to 20 sq. inches (129 sq. cm) and 1/8 inch (3.2 mm) thick for larger sizes.

1. Engraved legend with black letters on white face.

2. Punched or drilled for mechanical fasteners.

3. Framed with mitered acrylic molding and arranged for attachment at applicable equipment.

2.8 CABLE TIES

A. General-Purpose Cable Ties: Fungus inert, self extinguishing, one piece, self locking, Type 6/6 nylon.

1. Minimum Width: 3/16 inch (5 mm).

2. Tensile Strength at 73 deg F (23 deg C), According to ASTM D 638: 12,000 psi (82.7 MPa).

3. Temperature Range: Minus 40 to plus 185 deg F (Minus 40 to plus 85 deg C).

4. Color: Black except where used for color-coding.

2.9 MISCELLANEOUS IDENTIFICATION PRODUCTS

A. Fasteners for Labels and Signs: Self-tapping, stainless-steel screws or stainless-steel machine screws with nuts and flat and lock washers.

PART 3 - EXECUTION

3.1 INSTALLATION

A. Verify identity of each item before installing identification products.

B. Location: Install identification materials and devices at locations for most convenient viewing without interference with operation and maintenance of equipment.

C. Apply identification devices to surfaces that require finish after completing finish work.

D. Self-Adhesive Identification Products: Clean surfaces before application, using materials and methods recommended by manufacturer of identification device.

E. Attach signs and plastic labels that are not self-adhesive type with mechanical fasteners appropriate to the location and substrate.

F. Attach plastic raceway and cable labels that are not self-adhesive type with clear vinyl tape with adhesive appropriate to the location and substrate.

G. System Identification Color-Coding Bands for Raceways and Cables: Each color-coding band shall completely encircle cable or conduit. Place adjacent bands of two-color markings in contact, side by side. Locate bands at changes in direction, at penetrations of walls and floors, at 50-foot (15-m) maximum intervals in straight runs, and at 25-foot (7.6-m) maximum intervals in congested areas.

H. Aluminum Wraparound Marker Labels and Metal Tags: Secure tight to surface of conductor or cable at a location with high visibility and accessibility.

I. Underground-Line Warning Tape: During backfilling of trenches install continuous undergroundline warning tape directly above line at 6 to 8 inches (150 to 200 mm) below finished grade. Use multiple tapes where width of multiple lines installed in a common trench exceeds 16 inches (400 mm) overall.

J. Painted Identification: Comply with requirements in painting Sections for surface preparation and paint application.

3.2 IDENTIFICATION SCHEDULE

A. Accessible Raceways, 600 V or Less, for Service, Feeder, and Branch Circuits More Than 30 A, and 120 V to ground: Identify with self-adhesive vinyl label. Install labels at 10-foot (3-m) maximum intervals.

B. Accessible Raceways and Cables within Buildings: Identify the covers of each junction and pull box of the following systems with self-adhesive vinyl labels with the wiring system legend and system voltage. System legends shall be as follows:

1. Emergency Power.

C. Power-Circuit Conductor Identification, 600 V or Less:

1. Color-Coding for Phase and Voltage Level Identification, 600 V or Less: Use colors listed below for ungrounded conductors.

a. Color shall be factory applied or field applied for sizes larger than No. 8 AWG, if authorities having jurisdiction permit.

b. Colors for 208/120-V Circuits:

1) Phase A: Black.

2) Phase B: Red.

3) Phase C: Blue.

c. Colors for 480/277-V Circuits:

1) Phase A: Brown.

2) Phase B: Orange.

3) Phase C: Yellow.

2. For conductors in vaults, pull and junction boxes, manholes, and handholes, use colorcoding conductor tape to identify the phase.

3. Field-Applied, Color-Coding Conductor Tape: Apply in half-lapped turns for a minimum distance of 6 inches (150 mm) from terminal points and in boxes where splices or taps are made. Apply last two turns of tape with no tension to prevent possible unwinding. Locate bands to avoid obscuring factory cable markings.

D. Power-Circuit Conductor Identification, More than 600 V: For conductors in vaults, pull and junction boxes, manholes, and handholes, use nonmetallic plastic tag holder with adhesivebacked phase tags, and a separate tag with the circuit designation.

E. Install instructional sign including the color-code for grounded and ungrounded conductors using adhesive-film-type labels.

F. Control-Circuit Conductor Identification: For conductors and cables in pull and junction boxes, manholes, and handholes, use write-on tags or self-adhesive, self-laminating polyester labels with the conductor or cable designation, origin, and destination.

G. Control-Circuit Conductor Termination Identification: For identification at terminations provide heat-shrink preprinted tubes or self-adhesive, self-laminating polyester labels with the conductor designation.

H. Ground fault interrupter outlets: Identify receptacles supplied by ground fault interrupter circuit breakers or by upstream ground fault interrupter receptacles. Use engraved letters on device plate.

I. Conductors to Be Extended in the Future: Attach write-on tags or marker tape to conductors and list source and circuit number.

J. Auxiliary Electrical Systems Conductor Identification: Identify field-installed alarm, control, and signal connections.

1. Identify conductors, cables, and terminals in enclosures and at junctions, terminals, and pull points. Identify by system and circuit designation.

2. Use system of marker tape designations that is uniform and consistent with system used by manufacturer for factory-installed connections.

3. Coordinate identification with Project Drawings, manufacturer's wiring diagrams, and the Operation and Maintenance Manual.

K. Locations of Underground Lines: Identify with underground-line warning tape for power, lighting, communication, and control wiring and optical fiber cable.

1. Limit use of underground-line warning tape to direct-buried cables.

2. Install underground-line warning tape for both direct-buried cables and cables in raceway.

L. Warning Labels for Indoor Cabinets, Boxes, and Enclosures for Power and Lighting: Bakedenamel warning signs.

1. Comply with 29 CFR 1910.145.

2. Identify system voltage with black letters on an orange background.

3. Apply to exterior of door, cover, or other access.

4. Service equipment shall be labeled with the maximum available fault current. Label shall indicate date fault current calculation was performed.

5. Switchboards, Panelboards, Equipment Control Panels, Meter Socket Enclosures, and Motor Control Centers: Labeled to warn of potential electric arc flash hazards. The label shall be located so as to be clearly visible before examination, adjustment, servicing, or maintenance of the equipment.

6. 480 Volt Switchboards, Panelboards, and Panelboard Backboxes: Identify with "WARNING 480 VOLTS".

M. Operating Instruction Signs: Install instruction signs to facilitate proper operation and maintenance of electrical systems and items to which they connect. Install instruction signs with approved legend where instructions are needed for system or equipment operation.

N. Equipment Identification Labels: On each unit of equipment, install unique designation label that is consistent with wiring diagrams, schedules, and the Operation and Maintenance Manual. Apply labels to disconnect switches and protection equipment, central or master units, control panels, control stations, terminal cabinets, and racks of each system. Systems include power, lighting, control, communication, signal, monitoring, and alarm systems unless equipment is provided with its own identification.

1. Labeling Instructions:

a. Indoor Equipment: Engraved, laminated acrylic or melamine label. Unless otherwise indicated, provide a single line of text with 1/2-inch- (13-mm-) high letters on 1-1/2-inch- (38-mm-) high label; where two lines of text are required, use labels 2 inches (50 mm) high.

b. Outdoor Equipment: Engraved, laminated acrylic or melamine label.

c. Elevated Components: Increase sizes of labels and letters to those appropriate for viewing from the floor.

d. Unless provided with self-adhesive means of attachment, fasten labels with appropriate mechanical fasteners that do not change the NEMA or NRTL rating of the enclosure.

2. Equipment to Be Labeled:

a. Panelboards: Typewritten directory of circuits in the location provided by panelboard manufacturer. Panelboard identification shall be engraved laminated acrylic or melamine label.

b. Enclosures and electrical cabinets.

c. Switchboards.

d. Transformers: Label that includes tag designation shown on Drawings for the transformer, feeder, and panelboards or equipment supplied by the secondary.

e. Enclosed switches.

f. Enclosed circuit breakers.

g. Enclosed controllers.

h. Contactors.

END OF SECTION 26 05 53

X:\Specs\140143\260553 identification for electrical systems.doc

SECTION 26 08 00 - ELECTRICAL TESTING

PART 1 - GENERAL

1.1 SECTION INCLUDES

A. This section includes the following basic electrical materials and methods to complement other Division 26 Sections.

B. This Section includes general requirements for electrical field testing and inspecting. Detailed requirements are specified in each Section containing components that require testing. General requirements include the following:

1. Coordination requirements for testing and inspecting

2. Reporting requirements for testing and inspecting.

1.2 RELATED DOCUMENTS

A. Drawings and general provisions of Contract, including General and Supplementary Conditions, apply to this section.

B. Related Section: The following Sections contain requirements that relate to this Section:

1. Section 26 05 00 “Common Work Results for Electrical”.

2. Section 26 05 48 “Seismic Controls for Electrical Work”.

3. This section is a part of each Division 26.

1.3 QUALITY ASSURANCE

A. As specified in each Section containing electrical testing requirements.

PART 2 - PRODUCTS

NOT USED

PART 3 - EXECUTION

3.1 GENERAL TESTS AND INSPECTIONS

A. Where no specific requirements are given, provide testing in accordance with the latest version of the InterNational Testing Association (NETA) Acceptance Testing Specification for Electric Power Distribution Equipment and Systems.

B. Where tests are specified to be performed by an independent testing agency, prepare systems, equipment, and components for tests and inspections, and perform preliminary tests to ensure that systems, equipment, and components are ready for independent agency testing. Include the following minimum preparations as appropriate:

1. Perform insulation-resistance tests.

2. Perform continuity tests.

3. Perform rotation test (for motors to be tested).

4. Provide a stable source of single-phase, 208/120-V electrical power for test instrumentation at each test location.

C. Test and Inspection Reports: In addition to requirements specified elsewhere, report the following:

1. Manufacturer's written testing and inspecting instructions.

2. Calibration and adjustment settings of adjustable and interchangeable devices involved in tests.

3. Tabulation of expected measurement results made before measurements.

4. Tabulation of "as-found" and "as-left" measurement and observation results.

END OF SECTION 26 08 00

X:\Specs\140143\260800 Electrical Testing.doC

SECTION 26 09 23 - LIGHTING CONTROL DEVICES

PART 1 - GENERAL

1.1 RELATED DOCUMENTS

A. Drawings and general provisions of the Contract, including General and Supplementary Conditions and Division 01 Specification Sections, apply to this Section.

1.2 SUMMARY

A. Section Includes:

1. Time switches.

2. Photoelectric switches.

3. Lighting contactors. B. Related Requirements:

1. Section 26 27 26 "Wiring Devices" for manual light switches.

1.3 ACTION SUBMITTALS

A. Product Data: For each type of product.

B. Shop Drawings: Show installation details for occupancy and light-level sensors.

1. Interconnection diagrams showing field-installed wiring.

2. Include diagrams for power, signal, and control wiring.

1.4 INFORMATIONAL SUBMITTALS

A. Field quality-control reports.

1.5 CLOSEOUT SUBMITTALS

A. Operation and Maintenance Data: For each type of lighting control device to include in emergency, operation, and maintenance manuals.

PART 2 - PRODUCTS

2.1 TIME SWITCHES

A. Manufacturers: Subject to compliance with requirements, provide products by one of the following:

1. Cooper Industries, Inc.

2. Leviton Manufacturing Co., Inc.

B. Electronic Time Switches: Solid state, programmable, with alphanumeric display; complying with UL 917.

1. Listed and labeled as defined in NFPA 70, by a qualified testing agency, and marked for intended location and application.

2. Contact Configuration: SPST.

3. Contact Rating: 30-A inductive or resistive, 240-V ac.

C. Electromechanical-Dial Time Switches: Comply with UL 917.

1. Listed and labeled as defined in NFPA 70, by a qualified testing agency, and marked for intended location and application.

2.2 INDOOR OCCUPANCY SENSORS

A. General Requirements for Sensors: Wall- or ceiling-mounted, solid-state indoor occupancy sensors with a separate power pack.

1. Listed and labeled as defined in NYC Electrical Code, by a qualified testing agency, and marked for intended location and application.

2. Operation: Unless otherwise indicated, turn lights on when coverage area is occupied, and turn them off when unoccupied; with a time delay for turning lights off, adjustable over a minimum range of 1 to 15 minutes.

3. Sensor Output: Contacts rated to operate the connected relay, complying with UL 773A. Sensor is powered from the power pack.

4. Power Pack: Dry contacts rated for 20-A ballast load at 120- and 277-V ac, for 13-A tungsten at 120-V ac, and for 1 hp at 120-V ac. Sensor has 24-V dc, 150-mA, Class 2 power source, as defined by NFPA 70.

5. Mounting:

a. Sensor: Suitable for mounting in any position on a standard outlet box.

b. Relay: Externally mounted through a 1/2-inch (13-mm) knockout in a standard electrical enclosure.

c. Time-Delay and Sensitivity Adjustments: Recessed and concealed behind hinged door.

6. Indicator: Digital display, to show when motion is detected during testing and normal operation of sensor.

7. Bypass Switch: Override the "on" function in case of sensor failure.

8. Automatic Light-Level Sensor: Adjustable from 2 to 200 fc (21.5 to 2152 lux); turn lights off when selected lighting level is present.

B. PIR Type: Ceiling mounted; detect occupants in coverage area by their heat and movement.

1. Detector Sensitivity: Detect occurrences of 6-inch- (150-mm-) minimum movement of any portion of a human body that presents a target of not less than 36 sq. in. (232 sq. cm).

C. Ultrasonic Type: Ceiling mounted; detect occupants in coverage area through pattern changes of reflected ultrasonic energy.

1. Detector Sensitivity: Detect a person of average size and weight moving not less than 12 inches (305 mm) in either a horizontal or a vertical manner at an approximate speed of 12 inches/s (305 mm/s).

2. Detection Coverage (Small Room): Detect occupancy anywhere within a circular area of 600 sq. ft. (56 sq. m) when mounted on a 96-inch- (2440-mm-) high ceiling.

D. Dual-Technology Type: Ceiling mounted; detect occupants in coverage area using PIR and ultrasonic detection methods. The particular technology or combination of technologies that control on-off functions is selectable in the field by operating controls on unit.

1. Sensitivity Adjustment: Separate for each sensing technology.

2. Detector Sensitivity: Detect occurrences of 6-inch- (150-mm-) minimum movement of any portion of a human body that presents a target of not less than 36 sq. in. (232 sq. cm), and detect a person of average size and weight moving not less than 12 inches (305 mm) in either a horizontal or a vertical manner at an approximate speed of 12 inches/s (305 mm/s).

3. Detection Coverage (Standard Room): Detect occupancy anywhere within a circular area of 1000 sq. ft. (93 sq. m) when mounted on a 96-inch- (2440-mm-) high ceiling.

2.3 SWITCHBOX-MOUNTED OCCUPANCY SENSORS

A. General Requirements for Sensors: Automatic-wall-switch occupancy sensor, suitable for mounting in a single gang switchbox.

1. Listed and labeled as defined in NYC Electrical Code by a qualified testing agency, and marked for intended location and application.

2. Operating Ambient Conditions: Dry interior conditions, 32 to 120 deg F (0 to 49 deg C).

3. Switch Rating: Not less than 800-VA fluorescent at 120 V, 1200-VA fluorescent at 277 V, and 800-W incandescent. B. Wall-Switch Sensor:

1. Standard Range: 180-degree field of view, field adjustable from 180 to 40 degrees; with a minimum coverage area of 900 sq. ft. (84 sq. m) 2100 sq. ft (196 sq. m).

2. Sensing Technology: Dual technology - PIR and ultrasonic.

3. Switch Type: SP, manual "on," automatic "off."

4. Voltage: Dual voltage, 120 and 277 V; dual-technology type.

5. Ambient-Light Override: Concealed, field-adjustable, light-level sensor from 10 to 150 fc (108 to 1600 lux). The switch prevents the lights from turning on when the light level is higher than the set point of the sensor.

2.4 LIGHTING CONTACTORS

A. Manufacturers: Subject to compliance with requirements, provide products by one of the following or approved equal.

1. Allen-Bradley/Rockwell Automation.

2. ASCO Power Technologies, LP; a business of Emerson Network Power.

3. Eaton Corporation.

4. General Electric Company.

5. Square D.

B. Description: Electrically operated and mechanically held, combination-type lighting contactors, complying with NEMA ICS 2 and UL 508.

1. Current Rating for Switching: Listing or rating consistent with type of load served, including tungsten filament, inductive, and high-inrush ballast (ballast with 15 percent or less total harmonic distortion of normal load current).

2. Fault Current Withstand Rating: Equal to or exceeding the available fault current at the point of installation.

3. Enclosure: Comply with NEMA 250.

4. Provide with control and pilot devices as scheduled, matching the NEMA type specified for the enclosure.

PART 3 - EXECUTION

3.1 SENSOR INSTALLATION

A. Coordinate layout and installation of ceiling-mounted devices with other construction that penetrates ceilings or is supported by them, including light fixtures, HVAC equipment, smoke detectors, fire-suppression systems, and partition assemblies.

B. Install and aim sensors in locations to achieve not less than 90 percent coverage of areas indicated. Do not exceed coverage limits specified in manufacturer's written instructions.

3.2 WIRING INSTALLATION

A. Wiring Method: Comply with Section 26 05 19 "Low-Voltage Electrical Power Conductors and Cables." Minimum conduit size is ¾".

B. Wiring within Enclosures: Comply with NECA 1. Separate power-limited and nonpower-limited conductors according to conductor manufacturer's written instructions.

C. Size conductors according to lighting control device manufacturer's written instructions unless otherwise indicated.

D. Splices, Taps, and Terminations: Make connections only on numbered terminal strips in junction, pull, and outlet boxes; terminal cabinets; and equipment enclosures.

3.3 IDENTIFICATION

A. Identify components and power and control wiring according to Section 26 05 53 "Identification for Electrical Systems."

1. Identify controlled circuits in lighting contactors.

2. Identify circuits or luminaires controlled by photoelectric and occupancy sensors at each sensor.

B. Label time switches and contactors with a unique designation.

3.4 FIELD QUALITY CONTROL

A. Perform the following tests and inspections with the assistance of a factory-authorized service representative:

1. Operational Test: After installing time switches and sensors, and after electrical circuitry has been energized, start units to confirm proper unit operation.

2. Test and adjust controls and safeties. Replace damaged and malfunctioning controls and equipment.

B. Lighting control devices will be considered defective if they do not pass tests and inspections.

C. Prepare test and inspection reports.

3.5 ADJUSTING

A. Occupancy Adjustments: When requested within 12 months from date of Substantial Completion, provide on-site assistance in adjusting sensors to suit actual occupied conditions. Provide up to two visits to Project during other-than-normal occupancy hours for this purpose.

1. For occupancy and motion sensors, verify operation at outer limits of detector range. Set time delay to suit Owner's operations.

2. For daylighting controls, adjust set points and deadband controls to suit Owner's operations.

3. Align high-bay occupancy sensors using manufacturer's laser aiming tool.

END OF SECTION 26 09 23

X:\Specs\140143\260923 lighting control devices.doc

SECTION 26 20 01 - FEEDERS AND BRANCH CIRCUITRY

PART 1 - GENERAL

1.1 RELATED DOCUMENTS

A. Drawings and general provisions of the Contract, including General and Supplementary Conditions apply to this Section.

1.2 SUMMARY

A. Section includes basic requirements for the installation of light and power feeders and circuitry run at less than 600 volts. B. Related Requirements:

1. Division 26, Section "Raceways and Boxes."

2. Division 26, Section "Conductors and Cables."

3. Division 26, Section "Panelboards."

1.3 ACTION SUBMITTALS A.

Shop Drawings:

1. Circuited up "as-built" drawings and panel directories as called for in the Division 26 related sections.

1.4 QUALITY ASSURANCE

A. Comply with NFPA 70, as amended by state and local codes.

PART 2 - PRODUCTS

2.1 MATERIALS

A. Products shall be as specified in the Division 26 related sections.

PART 3 - EXECUTION

3.1 INSTALLATION OF FEEDERS

A. Feeder connections shall be in the phase rotation that establishes proper operation for all equipment supplied.

B. Feeders consisting of multiple cables and raceways shall be arranged such that each raceway of the feeder contains one cable for each phase leg (and one neutral cable if any).

C. Each individual tap off a feeder that consists of multiple cables per phase (and neutral if any) shall be arranged so that all of the cables of a phase leg (and neutral if any) of the feeder are connected to the corresponding phase leg (and neutral if any) of the individual tap.

D. Indications of conductor sizing for three phase and three phase/four wire feeders shall, unless otherwise noted on the drawings, be understood as follows:

1. Three (3) equally sized conductors represents a three phase feeder.

2. Four (4) equally sized conductors represents a three phase/4 wire feeder with 100 percent neutral.

3. Three (3) equally sized conductors plus one (1) smaller conductor represents a three phase/three wire feeder plus ground wire.

4. Three (4) equally sized conductors plus one (1) smaller conductor represents a three phase/four wire feeder plus ground wire).

3.2 INSTALLATION OF LIGHTING AND APPLIANCE BRANCH CIRCUITRY

A. Circuitry indicated without sizing shall be understood to be lighting and appliance branch circuitry protected at 20 amps or less.

B. Conform all lighting and appliance branch circuitry (regardless of whether protected above or below 20 amps) to the following:

1. Except as noted below, circuitry shall be multi-wire utilizing common neutrals arranged so that no neutral conductor acts as a common wire for more than one circuit conductor connected to the same phase leg of the supply system.

2. Two and three pole branches in panels shall be used respectively for individual single phase load items connected line to line and individual three phase load items.

3. Multi-wire branch circuits shall be supplied by multi-pole circuit breakers.

4. Where circuitry indications require the use of 2-pole and/or 3-pole branch breakers that have not been scheduled, provide in the panelboards the required multi-pole breakers in lieu of the equivalent number of single pole branch breakers. Required quantities of single, two, and three pole branch breakers shall be confirmed prior to ordering panels.

5. Branch circuitry supplying relay controlled lighting fixtures shall be understood to include all necessary interconnections between the control panels containing the relays and the associated lighting or appliance panels.

6. Under no condition shall any local switch break a neutral conductor.

7. At any location where lighting and appliance branch circuitry is extended from a flush mounted panelboard to a suspended ceiling immediately above, at least four 1-inch empty conduits shall be included (in addition to those required for active circuitry) to

permit future wiring escape from the panelboard. The empty conduits shall extend up from the panel and shall terminate in a threaded conduit cap immediately after turning out into the hung ceiling space.

8. Raceway sizes shall conform to standard maximum permissible occupancy requirements except where these are exceeded by other requirements specified elsewhere.

C. Conform lighting and appliance branch circuitry, indicated as being protected at 20 amps or less, to the following:

1. 120 volt circuitry shall be supplied from 20 amp panel branches except as indicated.

2. Conductors for 277 (265) volt circuitry extending in excess of 150 feet, from the point of supply, to the first outlet shall be #10 AWG (minimum) copper to the first outlet. Increase beyond #10 AWG if required for compliance with code-mandated voltage drop restrictions.

3. Conductors used in runs consisting of more than six wires (exclusive of grounding conductors) in a single raceway shall be #10 AWG copper minimum. Increase beyond #10 AWG as required to comply with code-mandated derating factors, and as specified hereinbefore.

4. Any installed lighting and appliance branch circuitry, found (as a result of unnecessarily light loading of conductors) to make excessive use of panel branches, shall be rearranged.

5. Circuits shall be balanced on phases at their supply point as evenly as possible.

6. The final arrangement of lighting and appliance branch circuitry shall be fully delineated on the record, or "as-built" drawings called for elsewhere.

END OF SECTION 26 20 01

X:\Specs\140143\262001 feeders and branch circuitry.doc

SECTION 26 22 00 - LOW-VOLTAGE TRANSFORMERS

PART 1 - GENERAL

1.1 RELATED DOCUMENTS

A. Drawings and general provisions of the Contract, including General and Supplementary Conditions apply to this Section.

1.2 SUMMARY

A. This Section includes the following types of dry-type transformers rated 600 V and less, with capacities up to 1000 kVA:

1. Distribution transformers.

1.3 COORDINATION

A. Coordinate size and location of concrete bases with actual transformer provided. Cast anchorbolt inserts into bases. Concrete, reinforcement, and formwork requirements are specified with concrete.

B. Coordinate installation of wall-mounting and structure-hanging supports with actual transformer provided.

PART 2 - PRODUCTS Not Applicable

PART 3 - EXECUTION

3.1 INSTALLATION

A. Install wall-mounting transformers level and plumb with wall brackets fabricated by transformer manufacturer.

B. Construct concrete bases and anchor floor-mounting transformers according to manufacturer's written instructions and requirements in Section 26 05 29 "Hangers and Supports for Electrical Systems."

C. Comply with safety requirements of IEEE C2.

D. Arrange equipment to provide adequate spacing for access and for cooling air circulation.

E. Identify transformers and install warning signs according to Division 26 Section "Electrical Identification."

3.2 CONNECTIONS

A. Ground equipment according to Section 26 05 26 "Grounding and Bonding for Electrical Systems."

B. Connect wiring according to Section 26 05 19 "Low-Voltage Electrical Power Conductors and Cables."

3.3 FIELD QUALITY CONTROL

A. Tests and Inspections:

1. Perform each visual and mechanical inspection and electrical test stated in NETA Acceptance Testing Specification. Certify compliance with test parameters.

B. Remove and replace units that do not pass tests or inspections and retest as specified above.

C. Infrared Scanning: Two months after Substantial Completion, perform an infrared scan of transformer connections.

1. Use an infrared-scanning device designed to measure temperature or detect significant deviations from normal values. Provide documentation of device calibration.

2. Perform 2 follow-up infrared scans of transformers, one at 4 months and the other at 11 months after Substantial Completion.

3. Prepare a certified report identifying transformer checked and describing results of scanning. Include notation of deficiencies detected, remedial action taken, and scanning observations after remedial action.

D. Test Labeling: On completion of satisfactory testing of each unit, attach a dated and signed "Satisfactory Test" label to tested component.

3.4 ADJUSTING

A. Record transformer secondary voltage at each unit for at least 48 hours of typical occupancy period. Adjust transformer taps to provide optimum voltage conditions at secondary terminals. Optimum is defined as not exceeding nameplate voltage plus 10 percent and not being lower than nameplate voltage minus 3 percent at maximum load conditions. Submit recording and tap settings as test results.

B. Output Settings Report: Prepare a written report recording output voltages and tap settings.

3.5 CLEANING

A. Vacuum dirt and debris; do not use compressed air to assist in cleaning.

END OF SECTION 26 22 00

X:\Specs\140143\262200 low-voltage transformers.doc

SECTION 26 24 13 - SWITCHBOARDS

PART 1 - GENERAL

1.1 RELATED DOCUMENTS

A. Drawings and general provisions of the Contract, including General and Supplementary Conditions apply to this Section.

1.2 SUMMARY

A. Section Includes:

1. Service and distribution switchboards rated 600 V and less.

2. Disconnecting and overcurrent protective devices.

3. Accessory components and features.

4. Identification.

1.3 ACTION SUBMITTALS

A. Product Data: For each type of switchboard, overcurrent protective device, transient voltage suppression device, ground-fault protector, accessory, and component indicated. Include dimensions and manufacturers' technical data on features, performance, electrical characteristics, ratings, accessories, and finishes.

B. Shop Drawings: For each switchboard and related equipment.

1. Include dimensioned plans, elevations, sections, and details, including required clearances and service space around equipment. Show tabulations of installed devices, equipment features, and ratings.

2. Detail enclosure types.

3. Detail bus configuration, current, and voltage ratings.

4. Detail short-circuit current rating of switchboards and overcurrent protective devices.

5. Include evidence of NRTL listing for series rating of installed devices.

6. Detail features, characteristics, ratings, and factory settings of individual overcurrent protective devices and auxiliary components.

7. Include diagram and details of proposed mimic bus.

8. Include schematic and wiring diagrams for power, signal, and control wiring.

1.4 INFORMATIONAL SUBMITTALS

A. Field Quality-Control Reports:

1. Test procedures used.

2. Test results that comply with requirements.

3. Results of failed tests and corrective action taken to achieve test results that comply with requirements.

1.5 CLOSEOUT SUBMITTALS

A. Operation and Maintenance Data: For switchboards and components to include in emergency, operation, and maintenance manuals. Include the following:

1. Routine maintenance requirements for switchboards and all installed components.

2. Manufacturer's written instructions for testing and adjusting overcurrent protective devices.

3. Time-current coordination curves for each type and rating of overcurrent protective device included in switchboards. Submit on translucent log-log graft paper; include selectable ranges for each type of overcurrent protective device.

1.6 MAINTENANCE MATERIAL SUBMITTALS

A. Furnish extra materials that match products installed and that are packaged with protective covering for storage and identified with labels describing contents.

1. Potential Transformer Fuses: Equal to 10 percent of quantity installed for each size and type, but no fewer than two of each size and type.

2. Control-Power Fuses: Equal to 10 percent of quantity installed for each size and type, but no fewer than two of each size and type.

3. Fuses and Fusible Devices for Fused Circuit Breakers: Equal to 10 percent of quantity installed for each size and type, but no fewer than three of each size and type.

4. Fuses for Fused Switches: Equal to 10 percent of quantity installed for each size and type, but no fewer than three of each size and type.

1.7 QUALITY ASSURANCE

A. Source Limitations: Obtain switchboards, overcurrent protective devices, components, and accessories from single source from single manufacturer.

B. Product Selection for Restricted Space: Drawings indicate maximum dimensions for switchboards including clearances between switchboards and adjacent surfaces and other items. Comply with indicated maximum dimensions.

C. Electrical Components, Devices, and Accessories: Listed and labeled as defined in NFPA 70, by a qualified testing agency, and marked for intended location and application.

D. Comply with NEMA PB 2.

E. Comply with NFPA 70, as amended by state and local codes.

F. Comply with UL 891.

1.8 DELIVERY, STORAGE, AND HANDLING

A. Deliver switchboards in sections or lengths that can be moved past obstructions in delivery path.

B. Remove loose packing and flammable materials from inside switchboards and install temporary electric heating (250 W per section) to prevent condensation.

C. Handle and prepare switchboards for installation according to NECA 400 NEMA PB 2.1.

1.9 PROJECT CONDITIONS

A. Installation Pathway: Remove and replace access fencing, doors, lift-out panels, and structures to provide pathway for moving switchboards into place. B. Environmental Limitations:

1. Do not deliver or install switchboards until spaces are enclosed and weathertight, wet work in spaces is complete and dry, work above switchboards is complete, and temporary HVAC system is operating and maintaining ambient temperature and humidity conditions at occupancy levels during the remainder of the construction period.

2. Rate equipment for continuous operation under the following conditions unless otherwise indicated:

a. Ambient Temperature: Not exceeding 104 deg F (40 deg C).

b. Altitude: Not exceeding 6600 feet (2000 m).

C. Interruption of Existing Electric Service: Do not interrupt electric service to facilities occupied by Owner or others unless permitted under the following conditions and then only after arranging to provide temporary electric service according to requirements indicated:

1. Notify Architect no fewer than seven days in advance of proposed interruption of electric service.

2. Indicate method of providing temporary electric service.

3. Do not proceed with interruption of electric service without Architect's permission.

4. Comply with NFPA 70E.

1.10 COORDINATION

A. Coordinate layout and installation of switchboards and components with other construction that penetrates walls or is supported by them, including electrical and other types of equipment, raceways, piping, encumbrances to workspace clearance requirements, and adjacent surfaces. Maintain required workspace clearances and required clearances for equipment access doors and panels.

B. Coordinate sizes and locations of concrete bases with actual equipment provided. Cast anchorbolt inserts into bases. Concrete, reinforcement, and formwork requirements are specified with concrete.

1.11 WARRANTY

A. Special Warranty: Manufacturer's standard form in which manufacturer agrees to repair or replace transient voltage suppression devices that fail in materials or workmanship within specified warranty period.

1. Warranty Period: Five years from date of Substantial Completion.

PART 2 - PRODUCTS

2.1 MANUFACTURED UNITS

A. Manufacturers: Subject to compliance with requirements, available manufacturers offering products that may be incorporated into the Work include, but are not limited to, the following:

1. Eaton Electrical Inc.; Cutler-Hammer Business Unit.

2. General Electric Company; GE Consumer & Industrial - Electrical Distribution.

3. Siemens Energy & Automation, Inc.

4. Square D; a brand of Schneider Electric.

5. Lincoln Electric.

6. All City Switchboard.

7. Atlas Switchboard

8. Electrotech

B. Front-Connected, Front-Accessible Switchboards:

1. Main Devices: Panel mounted.

2. Branch Devices: Panel mounted.

3. Sections front and rear aligned.

C. Front- and Side-Accessible Switchboards:

1. Main Devices: Fixed, individually mounted.

2. Branch Devices: Panel mounted.

3. Sections front and rear aligned.

D. Front- and Rear-Accessible Switchboards:

1. Main Devices: Fixed, individually mounted.

2. Branch Devices: Panel and fixed, individually mounted.

3. Sections front and rear aligned.

E. Indoor Enclosures: Steel, NEMA 250, Type 3.

F. Enclosure Finish for Indoor Units: Factory-applied finish in manufacturer's standard gray custom color finish over a rust-inhibiting primer on treated metal surface. G. Outdoor Enclosures: Type 3R.

1. Finish: Factory-applied finish in manufacturer's standard color; undersurfaces treated with corrosion-resistant undercoating.

2. Enclosure: Downward, rearward sloping roof; rear hinged doors for each section, with provisions for padlocking.

3. Doors: Personnel door at each end of aisle, minimum width of 30 inches (762 mm); opening outwards; with panic hardware and provisions for padlocking.

4. Accessories: Fluorescent lighting fixtures, ceiling mounted; wired to a three-way light switch at each end of aisle; ground-fault circuit interrupter (GFCI) duplex receptacle; emergency battery pack lighting fixture installed on wall of aisle midway between personnel doors.

5. Walk-in Aisle Heating and Ventilating:

   a. Factory-installed electric unit heater(s), wall or ceiling mounted, with integral thermostat and disconnect and with capacities to maintain switchboard interior temperature of 40 deg F (5 deg C) at ASHRAE outside design temperature for the project location.

   b. Factory-installed exhaust fan with capacities to maintain switchboard interior temperature in accordance with ANSI / IEEE standards.

   c. Ventilating openings complete with replaceable fiberglass air filters.

   d. Thermostat: Single stage; wired to control heat and exhaust fan.

6. Power for Space Heaters, Ventilation, Lighting, and Receptacle: Include a control-power transformer within the switchboard. Supply voltage shall be 120/208-V ac. H. Barriers: Between adjacent switchboard sections.

1. Polyester resin fiberglass barriers shall be included to isolate service bus bars from the remainder of the switchboard.

2. Polyester resin fiberglass barriers shall be included to segregate each service switch from its line and load side buses.

3. Polyester resin fiberglass barriers shall be included between adjacent vertical sections.

4. Polyester resin fiberglass barriers shall be thick enough for adequate mechanical strength, but in no case less than ¼ inch (7m). Opening in barriers allowing for the passage of bussing of cables from section to section shall be sealed tightly around the bus bars or cables with an approved, non-hygroscopic, arc resistant high dielectric sealing material.

I. Construction:

1. Switchboard arrangement shall be such that the lowest current carrying parts are at least 12 inches (30 cm) above finished floor, and height shall be as required by space conditions, and no more than as indicated.

2. The neutral bus in switchboards shall have, at an accessible point as close as practical to the incoming supply connection, a removable link section. The neutral bus shall be bonded to the ground bus hereinafter specified by means of a connections consisting of two paralleled 500 kcmil copper insulated cables made on the line side of the removable line section.

3. “Spaces only” for overcurrent protection and switching devices shall be bussed for the maximum device that can be fitted into them.

4. Switchboard construction shall be such that where 100 percent rated overcurrent protection and switching devices have been specified such devices shall be able to carry 100 percent of their rated load continuously when mounted in its enclosure.

5. Fusible switch units shall incorporate fuse clips intended to prevent the use of improper fuses.

J. Utility Metering Compartment: Fabricated, barrier compartment and section complying with utility company's requirements; hinged sealed door; buses provisioned for mounting utility company's current transformers and potential transformers or potential taps as required by utility company. If separate vertical section is required for utility metering, match and align with basic switchboard. Provide service entrance label and necessary applicable service entrance features.

K. Bus Transition and Incoming Pull Sections: Matched and aligned with basic switchboard.

L. Hinged Front Panels: Allow access to overcurrent device, metering, accessory, and blank compartments.

M. Pull Box on Top of Switchboard:

1. Adequate ventilation to maintain temperature in pull box within same limits as switchboard.

2. Removable covers shall form top, front, and sides. Top covers at rear shall be easily removable for drilling and cutting.

3. Bottom shall be insulating, fire-resistive material with separate holes for cable drops into switchboard.

4. Cable supports shall be arranged to facilitate cabling and adequate to support cables indicated, including those for future installation.

N. Buses and Connections: Three phase, four wire unless otherwise indicated.

1. Phase- and Neutral-Bus Material: Hard-drawn copper of 98 percent conductivity.

2. Load Terminals: Insulated, rigidly braced, runback bus extensions, of same material as through buses, equipped with connectors for outgoing circuit conductors. Provide load terminals for future circuit-breaker positions at full-ampere rating of circuit-breaker position.

3. Ground Bus: 1/4-by-2-inch- (6-by-50-mm-) hard-drawn copper of 98 percent conductivity, equipped with connectors for feeder and branch-circuit ground conductors. For busway feeders, extend insulated equipment grounding cable to busway ground connection and support cable at intervals in vertical run.

4. Main Phase Buses and Equipment Ground Buses: Uniform capacity for entire length of switchboard's main and distribution sections. Provide for future extensions from both ends.

5. Neutral Buses: 100 percent of the ampacity of phase buses unless otherwise indicated, equipped with connectors for outgoing circuit neutral cables. Brace bus extensions for busway feeder neutral bus.

6. Supports and Bracing for Buses: Adequate strength for indicated short-circuit currents.

7. Contact Surfaces of Buses: Siler plated.

O. Future Devices: Equip compartments with mounting brackets, supports, bus connections, and appurtenances at full rating of overcurrent device compartment.

P. Fungus Proofing: Permanent fungicidal treatment for overcurrent protective devices and other components including instruments and instrument transformers.

2.2 DISCONNECTING AND OVERCURRENT PROTECTIVE DEVICES

A. Future Devices: Where provision for future overcurrent protective devices or space is indicated, equip compartments with mounting brackets, supports, bus connections, and necessary appurtenances, designed for the OCPD types and ampere ratings indicated for future installation of devices.

2.3 RATINGS

A. Provide nominal system voltage, continuous main bus amperage, and short-circuit-current ratings as indicated.

B. Short circuit rating: Not less than 200,000 amps RMS symmetrical. Switchboard shall bear a manufacturer's label attesting thereto. If multiple labels are required to attest to complete compliance, such labels shall be provided.

C. Main bussing on the line side of the service switch shall be sized as follows:

Ampacity	Amperes per square inch copper	Amperes per square inch aluminum
Up to 1,200	1,000	750
1,201 - 2,000	800	600
2,001 - 4,000	700	525

1. Where no designation is indicated, or where the sum of the service switches (switch sizes or circuit breaker frame sizes) exceeds the indicated ampere desig-nation for the main bus, the main bus size shall be based on an ampacity equal to the sum of the service switches (except that it need not exceed 6 square inches (39 square centimeters) in cross section regardless of the in-dicated ampere designation. Where spaces for future service switches have been incorporated, the main bus sizing shall take this into account. D. Main bussing on the load side of the service switch shall be sized as follows:

Ampacity	Amperes per square inch copper	Amperes per square inch aluminum
Up to 2,500	1,000	750
2,501 - 4,999	800	600
5,000 and over	700	525

1. Where no designation is indicated, or where the sum of the service switches (switch sizes or circuit breaker frame sizes) exceeds the indicated ampere designation for the main bus, the main bus size shall be based on an ampacity equal to the sum of the service switches. Where spaces for future service switches have been incorporated, the main bus sizing shall take this into account.

2.4 IDENTIFICATION

A. Service Equipment Label: NRTL labeled for use as service equipment for switchboards with one or more service disconnecting and overcurrent protective devices.

1. Labeling: Permanent label providing torque values or tightening instructions for all busbar joints, affixed to each section.

PART 3 - EXECUTION

3.1 EXAMINATION

A. Receive, inspect, handle, and store switchboards according to NECA 400 and NEMA PB 2.1.

B. Examine switchboards before installation. Reject switchboards that are moisture damaged or physically damaged.

C. Examine elements and surfaces to receive switchboards for compliance with installation tolerances and other conditions affecting performance of the Work.

D. Proceed with installation only after unsatisfactory conditions have been corrected.

3.2 INSTALLATION

A. Install switchboards and accessories according to NECA 400 NEMA PB 2.1.

B. Equipment Mounting: Install switchboards on concrete base, 4-inch (100-mm) nominal thickness. Comply with requirements for concrete base specified in Section 03 30 00 "Cast-inPlace Concrete" and Section 03 30 53 "Miscellaneous Cast-in-Place Concrete."

1. Install dowel rods to connect concrete base to concrete floor. Unless otherwise indicated, install dowel rods on 18-inch (450-mm) centers around the full perimeter of concrete base.

2. For supported equipment, install epoxy-coated anchor bolts that extend through concrete base and anchor into structural concrete floor.

3. Place and secure anchorage devices. Use setting drawings, templates, diagrams, instructions, and directions furnished with items to be embedded.

4. Install anchor bolts to elevations required for proper attachment to switchboards.

C. Temporary Lifting Provisions: Remove temporary lifting eyes, channels, and brackets and temporary blocking of moving parts from switchboard units and components.

D. Operating Instructions: Frame and mount the printed basic operating instructions for switchboards, including control and key interlocking sequences and emergency procedures. Fabricate frame of finished wood or metal and cover instructions with clear acrylic plastic. Mount on front of switchboards.

E. Install filler plates in unused spaces of panel-mounted sections.

F. Install overcurrent protective devices, and instrumentation.

1. Set field-adjustable switches and circuit-breaker trip ranges.

G. Comply with NECA 1.

3.3 IDENTIFICATION

A. Identify field-installed conductors, interconnecting wiring, and components; provide warning signs complying with requirements for identification specified in Section 26 05 53 "Identification for Electrical Systems."

B. Switchboard Nameplates: Label each switchboard compartment with a nameplate complying with requirements for identification specified in Section 26 05 53 "Identification for Electrical Systems."

C. Device Nameplates: Label each disconnecting and overcurrent protective device and each meter and control device mounted in compartment doors with a nameplate complying with requirements for identification specified in Section 26 05 53 "Identification for Electrical Systems."

3.4 FIELD QUALITY CONTROL

A. Manufacturer's Field Service: Engage a factory-authorized service representative to inspect, test, and adjust components, assemblies, and equipment installations, including connections. B. Acceptance Testing Preparation:

1. Test insulation resistance for each switchboard bus, component, connecting supply, feeder, and control circuit.

2. Test continuity of each circuit.

C. Tests and Inspections:

1. Perform each visual and mechanical inspection and electrical test stated in NETA Acceptance Testing Specification. Certify compliance with test parameters.

2. Correct malfunctioning units on-site, where possible, and retest to demonstrate compliance; otherwise, replace with new units and retest.

3. Perform the following infrared scan tests and inspections and prepare reports:

a. Initial Infrared Scanning: After Substantial Completion, but not more than 60 days after Final Acceptance, perform an infrared scan of each switchboard. Remove front panels so joints and connections are accessible to portable scanner.

b. Follow-up Infrared Scanning: Perform an additional follow-up infrared scan of each switchboard 11 months after date of Substantial Completion.

c. Instruments and Equipment:

1) Use an infrared scanning device designed to measure temperature or to detect significant deviations from normal values. Provide calibration record for device.

4. Test and adjust controls, remote monitoring, and safeties. Replace damaged and malfunctioning controls and equipment.

D. Switchboard will be considered defective if it does not pass tests and inspections.

E. Prepare test and inspection reports, including a certified report that identifies switchboards included and that describes scanning results. Include notation of deficiencies detected, remedial action taken, and observations after remedial action.

3.5 ADJUSTING

A. Adjust moving parts and operable components to function smoothly, and lubricate as recommended by manufacturer.

3.6 PROTECTION

A. Temporary Heating: Apply temporary heat, to maintain temperature according to manufacturer's written instructions, until switchboard is ready to be energized and placed into service.

3.7 DEMONSTRATION

A. Train Owner's maintenance personnel to adjust, operate, and maintain switchboards, overcurrent protective devices, instrumentation, and accessories.

END OF SECTION 26 24 13

X:\Specs\140143\262413 switchboards.doc

SECTION 26 24 16 - PANELBOARDS

PART 1 - GENERAL

1.1 RELATED DOCUMENTS

A. Drawings and general provisions of the Contract, including General and Supplementary Conditions apply to this Section.

1.2 SUMMARY

A. Section Includes:

1. Power and Distribution panelboards.

2. Lighting and appliance branch-circuit panelboards

1.3 DEFINITIONS

A. Overcurrent Protective Device (OCD) (OCPD): A device operative on excessive current that causes and maintains the interruption of power in the circuit it protects.

1.4 ACTION SUBMITTALS

A. Product Data: For each type of panelboard, switching and overcurrent protective device, transient voltage suppression device, accessory, and component indicated. Include dimensions and manufacturers' technical data on features, performance, electrical characteristics, ratings, and finishes.

B. Shop Drawings: For each panelboard and related equipment.

1. Include dimensioned plans, elevations, sections, and details. Show tabulations of installed devices, equipment features, and ratings.

2. Detail enclosure types and details for types other than NEMA 250, Type 1.

3. Detail bus configuration, current, and voltage ratings.

4. Short-circuit current rating of panelboards and overcurrent protective devices.

5. Include evidence of NRTL listing for series rating of installed devices.

6. Detail features, characteristics, ratings, and factory settings of individual overcurrent protective devices and auxiliary components.

7. Include wiring diagrams for power, signal, and control wiring.

1.5 INFORMATIONAL SUBMITTALS

A. Qualification Data: For qualified testing agency.

B. Field Quality-Control Reports:

1. Test procedures used.

2. Test results that comply with requirements.

3. Results of failed tests and corrective action taken to achieve test results that comply with requirements.

C. Panelboard Schedules: For installation in panelboards. Submit final versions after load balancing.

1.6 CLOSEOUT SUBMITTALS

A. Operation and Maintenance Data: For panelboards and components to include in emergency, operation, and maintenance manuals. Include the following:

1. Manufacturer's written instructions for testing and adjusting overcurrent protective devices.

2. Time-current curves, including selectable ranges for each type of overcurrent protective device that allows adjustments.

1.7 MAINTENANCE MATERIAL SUBMITTALS

A. Furnish extra materials that match products installed and that are packaged with protective covering for storage and identified with labels describing contents.

1. Keys: Two spares for each type of panelboard cabinet lock.

2. Fuses for Fused Switches: Equal to 10 percent of quantity installed for each size and type, but no fewer than three of each size and type.

1.8 QUALITY ASSURANCE

A. Source Limitations: Obtain panelboards, overcurrent protective devices, components, and accessories from single source from single manufacturer.

B. Product Selection for Restricted Space: Drawings indicate maximum dimensions for panelboards including clearances between panelboards and adjacent surfaces and other items. Comply with indicated maximum dimensions.

C. Electrical Components, Devices, and Accessories: Listed and labeled as defined in NFPA 70, by a qualified testing agency, and marked for intended location and application.

D. Comply with NEMA PB 1.

E. Comply with NFPA 70, as amended by state and local codes.

1.9 DELIVERY, STORAGE, AND HANDLING

A. Remove loose packing and flammable materials from inside panelboards; install temporary electric heating (250 W per panelboard) to prevent condensation.

B. Handle and prepare panelboards for installation according to NECA 407 and NEMA PB 1.

1.10 PROJECT CONDITIONS

A. Environmental Limitations:

1. Do not deliver or install panelboards until spaces are enclosed and weathertight, wet work in spaces is complete and dry, work above panelboards is complete, and temporary HVAC system is operating and maintaining ambient temperature and humidity conditions at occupancy levels during the remainder of the construction period.

2. Rate equipment for continuous operation under the following conditions unless otherwise indicated:

a. Ambient Temperature: Not exceeding 23 deg F (minus 5 deg C) to plus 104 deg F (plus 40 deg C).

b. Altitude: Not exceeding 6600 feet (2000 m).

B. Service Conditions: NEMA PB 1, usual service conditions, as follows:

1. Ambient temperatures within limits specified.

2. Altitude not exceeding 6600 feet (2000 m).

C. Interruption of Existing Electric Service: Do not interrupt electric service to facilities occupied by Owner or others unless permitted under the following conditions and then only after arranging to provide temporary electric service according to requirements indicated:

1. Notify Architect no fewer than two days in advance of proposed interruption of electric service.

2. Do not proceed with interruption of electric service without Architect's written permission.

3. Comply with NFPA 70E.

1.11 COORDINATION

A. Coordinate layout and installation of panelboards and components with other construction that penetrates walls or is supported by them, including electrical and other types of equipment, raceways, piping, encumbrances to workspace clearance requirements, and adjacent surfaces. Maintain required workspace clearances and required clearances for equipment access doors and panels.

PART 2 - PRODUCTS

2.1 GENERAL REQUIREMENTS FOR PANELBOARDS

A. Enclosures: Flush- and surface-mounted cabinets.

1. Rated for environmental conditions at installed location.

a. Indoor Dry and Clean Locations: NEMA 250, Type 1

b. Outdoor Locations: NEMA 250, Type 3R

c. Marine area in close proximity of marina: NEMA 250, Type 4X stainless steel.

d. Other Wet or Damp Indoor Locations: NEMA 250, Type 4.

2. Finishes:

a. Panels and Trim: galvanized steel, factory finished immediately after cleaning and pretreating with manufacturer's standard two-coat, baked-on finish consisting of prime coat and thermosetting topcoat.

b. Back Boxes: Galvanized steel.

c. Fungus Proofing: Permanent fungicidal treatment for overcurrent protective devices and other components.

3. Directory Card: Inside panelboard door, mounted in metal frame with transparent protective cover.

B. Phase, Neutral, and Ground Buses:

1. Material: Hard-drawn copper, 98 percent conductivity.

2. Equipment Ground Bus: Adequate for feeder and branch-circuit equipment grounding conductors; bonded to box.

2.2 PANELBOARD BUSES

A. In no case shall the neutral bus ampacity of any panel supplied by a feeder with a neutral conductor that is larger than the phase conductors be less than the lesser of:

a. The ampacity of the neutral conductor of the feeder supplying the panel.

b. Twice the ampacity of the upstream overcurrent device protecting the feeder supplying the panel.

2. The above requirements for the sizing of panel neutral buses shall override any indications on the drawings that smaller neutral buses are acceptable.

3. Neutral buses shall be equipped with lugs capable of accepting single conductors (i.e., not paralleled) of an ampacity equal to the neutral bus rating (except where the neutral bus rating exceeds 400 amps).

4. If required by manufacturer in order to comply with increased neutral bus sizing criteria specified above, increase phase leg bussing, as well.

5. Refer to the light and power riser diagram or to other electrical drawings to determine which panels - if any - are supplied by feeders having "over-sized neutrals" and therefore require up-sizing of the panel neutral bus.

B. Conductor Connectors: Suitable for use with conductor material and sizes.

1. Material: To match bus material.

2. Feed-Through Lugs: type, suitable for use with conductor material. Locate at opposite end of bus from incoming lugs or main device.

3. Subfeed (Double) Lugs: type suitable for use with conductor material. Locate at same end of bus as incoming lugs or main device.

C. Service Equipment Label: NRTL labeled for use as service equipment for panelboards or load centers with one or more main service disconnecting and overcurrent protective devices.

D. Future Devices: Mounting brackets, bus connections, filler plates, and necessary appurtenances required for future installation of devices.

E. Where wires or cables are used within panelboards to make up internal connections (factory installed or otherwise) such wire or cable shall have copper conductors only.

F. Where indicated or as required to assure ready accessibility of top switching and overcurrent device, they shall be arranged as multiple adjacent sections. A single overall cabinet shall be supplied for the multiple adjacent sections that constitute one panel. 1/4 inch (7 mm) minimum thickness plastic barriers having adequate angle iron framing support all around shall be included between sections. The entire assembly shall be such as to include wiring gutter space for each section as if it were an individual panelboard. Common bussing shall be arranged for adjacent sections unless there is indication that the individual sections are to be separately supplied. Sub-feed lugs with full capacity cable taps to adjacent panel sections will be accepted as the bussing method.

2.3 POWER OR DISTRIBUTION PANELBOARDS

A. Manufacturers: Subject to compliance with requirements, available manufacturers offering products that may be incorporated into the Work include, but are not limited to, the following:

1. Eaton Electrical Inc.; Cutler-Hammer Business Unit.

2. General Electric Company; GE Consumer & Industrial - Electrical Distribution.

3. Siemens Energy & Automation, Inc.

4. Square D; a brand of Schneider Electric.

B. Panelboards: NEMA PB 1, power and feeder distribution type.

C. Main Overcurrent Protective Devices and Branch Overcurrent Protective Devices: as specified in Division 26, Section “Selection of Overcurrent Devices.”

D. Cabinet: width and a depth adequate for a three pole branch device equal in rating to the panel mains. In no case shall the cabinet be wider than 42 inches (106 cm) or deeper than 18 inches (46 cm).

2.4 LIGHTING AND APPLIANCE BRANCH-CIRCUIT PANELBOARDS

A. Manufacturers: Subject to compliance with requirements, available manufacturers offering products that may be incorporated into the Work include, but are not limited to, the following:

1. Eaton Electrical Inc.; Cutler-Hammer Business Unit.

2. General Electric Company; GE Consumer & Industrial - Electrical Distribution.

3. Siemens Energy & Automation, Inc.

4. Square D; a brand of Schneider Electric.

B. Panelboards: NEMA PB 1, lighting and appliance branch-circuit type.

C. Branch Overcurrent Protective Devices: Bolt-on circuit breakers, replaceable without disturbing adjacent units.

D. Doors: Concealed hinges; secured with flush latch with tumbler lock; keyed alike.

E. Gutter space: adequate space for connecting to all active and spare branches.

F. Cabinet width: not to exceed 24 inches (61 cm).

G. Cabinet depth: not to exceed 6 inches (15 cm).

2.5 ACCESSORY COMPONENTS AND FEATURES

A. Accessory Set: Include tools and miscellaneous items required for overcurrent protective device test, inspection, maintenance, and operation.

B. Portable Test Set: For testing functions of solid-state trip devices without removing from panelboard. Include relay and meter test plugs suitable for testing panelboard meters and switchboard class relays.

2.6 PANELBOARD SHORT CIRCUIT RATINGS

A. Panelboards shall bear U.L. labels attesting to the adequacy of the equipment to withstand and interrupt short-circuit currents not less than those available at their incoming terminals. Panels shall either be fully rated or shall be series rated in conjunction with integral or remote upstream devices. U.L. labels shall include size and type of allowable upstream and branch circuit devices and series connected ratings.

B. Panelboard short circuit ratings shall comply with the following:

1. 277/480 (265/460) and 480 (460) volt distribution and power panels shall be "fully rated" for 200,000 amps when used in conjunction with appropriate current limiting fuses as specified.

2. 277/480 (265/460) and 480 (460) volt distribution and power panels shall be "fully rated" for not less than 65,000 amps.

3. 277/480 (265/460) volt lighting and appliance panels shall be "series connected rated" for not less than 150,000 amps where used in conjunction with appropriate upstream current limiting fuses, or optionally with main or upstream current limiting circuit breakers.

a. Under the following circumstances, the required series ratings for lighting and appliance panels may be reduced below 150,000 amperes.

1) For any lighting and appliance panels at which the available short circuit current has been reduced to less than 100,000 amps, the required series short circuit rating may be reduced to 100,000 amps. Submit short circuit calculations demonstrating compliance.

2) Where the available short circuit current at the secondary service point is less than 95,000 amps, the required short circuit rating for all 277/480 volt lighting and appliance panels may be reduced to 125 percent of that available at the service point or 100,000 amps - whichever is less.

4. 120/208 volt power or distribution panels shall be fully rated for not less than 42,000 amps.

5. 120/208 volt lighting or appliance panels shall be "fully rated" for 10,000 amps except that panels supplied from transformers 225 KVA and larger shall be "fully rated" or "series connected" rated for not less than 22,000 amps.

6. Distribution and power panels shall be "fully rated" for 200,000 amps when used in conjunction with appropriate current limiting fuses as specified.

7. Lighting and appliance panels shall be "series connected rated" for not less than 150,000 amps where used in conjunction with appropriate upstream current limiting fuses, or optionally with main or upstream current limiting circuit breakers. Under the following circumstances, the required series ratings for lighting and appliance panels may be reduced below 150,000 amperes.

   a. For any lighting and appliance panels at which the available short circuit current has been reduced to less than 100,000 amps, the required series short circuit rating may be reduced to 100,000 amps. Submit short circuit calculations demonstrating compliance.

      1) Where the available short circuit current at the secondary service point is less than 95,000 amps, the required short circuit rating for all lighting and appliance panels may be reduced to 125 percent of that available at the service point or 100,000 amps - whichever is less.

PART 3 - EXECUTION

3.1 EXAMINATION

A. Receive, inspect, handle, and store panelboards according to NECA 407 and NEMA PB 1.1.

B. Examine panelboards before installation. Reject panelboards that are damaged or rusted or have been subjected to water saturation.

C. Examine elements and surfaces to receive panelboards for compliance with installation tolerances and other conditions affecting performance of the Work.

D. Proceed with installation only after unsatisfactory conditions have been corrected.

3.2 INSTALLATION

A. Install panelboards and accessories according to NECA 407 and NEMA PB 1.1.

B. Equipment Mounting: Install floor-mounted panelboards on concrete bases, 4-inch (100-mm) nominal thickness.

1. Install dowel rods to connect concrete base to concrete floor. Unless otherwise indicated, install dowel rods on 18-inch (450-mm) centers around full perimeter of base.

2. For panelboards, install epoxy-coated anchor bolts that extend through concrete base and anchor into structural concrete floor.

3. Place and secure anchorage devices. Use setting drawings, templates, diagrams, instructions, and directions furnished with items to be embedded.

4. Install anchor bolts to elevations required for proper attachment to panelboards.

5. Attach panelboard to the vertical finished or structural surface behind the panelboard.

C. Temporary Lifting Provisions: Remove temporary lifting eyes, channels, and brackets and temporary blocking of moving parts from panelboards.

D. Mount panelboard cabinet plumb and rigid without distortion of box. Mount recessed panelboards with fronts uniformly flush with wall finish and mating with back box.

E. Install overcurrent protective devices and controllers not already factory installed.

1. Set field-adjustable, circuit-breaker trip ranges. F. Install filler plates in unused spaces.

G. Arrange conductors in gutters into groups and bundle and wrap with wire ties after completing load balancing.

H. Comply with NECA 1.

3.3 IDENTIFICATION

A. Identify field-installed conductors, interconnecting wiring, and components; provide warning signs complying with Section 26 05 53 "Identification for Electrical Systems."

B. Create a directory to indicate installed circuit loads after balancing panelboard loads; incorporate Owner's final room designations. Obtain approval before installing. Use a computer or typewriter to create directory; handwritten directories are not acceptable.

C. Panelboard Nameplates: Label each panelboard with a nameplate complying with requirements for identification specified in Section 26 05 53 "Identification for Electrical Systems."

D. Device Nameplates: Label each branch circuit device in distribution panelboards with a nameplate complying with requirements for identification specified in Section 26 05 53 "Identification for Electrical Systems."

3.4 FIELD QUALITY CONTROL

A. Perform tests and inspections.

1. Manufacturer's Field Service: Engage a factory-authorized service representative to inspect components, assemblies, and equipment installations, including connections, and to assist in testing.

B. Acceptance Testing Preparation:

1. Test insulation resistance for each panelboard bus, component, connecting supply, feeder, and control circuit.

2. Test continuity of each circuit. C. Tests and Inspections:

1. Perform each visual and mechanical inspection and electrical test stated in NETA Acceptance Testing Specification. Certify compliance with test parameters.

2. Correct malfunctioning units on-site, where possible, and retest to demonstrate compliance; otherwise, replace with new units and retest.

3. Perform the following infrared scan tests and inspections and prepare reports:

a. Initial Infrared Scanning: After Substantial Completion, but not more than 60 days after Final Acceptance, perform an infrared scan of each panelboard. Remove front panels so joints and connections are accessible to portable scanner.

b. Instruments and Equipment:

1) Use an infrared scanning device designed to measure temperature or to detect significant deviations from normal values. Provide calibration record for device.

D. Panelboards will be considered defective if they do not pass tests and inspections.

E. Prepare test and inspection reports, including a certified report that identifies panelboards included and that describes scanning results. Include notation of deficiencies detected, remedial action taken, and observations after remedial action.

3.5 ADJUSTING

A. Adjust moving parts and operable component to function smoothly, and lubricate as recommended by manufacturer.

B. Load Balancing: After Substantial Completion, but not more than 60 days after Final Acceptance, measure load balancing and make circuit changes.

1. Measure as directed during period of normal system loading.

2. Perform load-balancing circuit changes outside normal occupancy/working schedule of the facility and at time directed. Avoid disrupting critical 24-hour services such as fax machines and on-line data processing, computing, transmitting, and receiving equipment.

3. After circuit changes, recheck loads during normal load period. Record all load readings before and after changes and submit test records.

4. Tolerance: Difference exceeding 20 percent between phase loads, within a panelboard, is not acceptable. Rebalance and recheck as necessary to meet this minimum requirement.

3.6 CLEANING

A. In completion of installation, inspect interior and exterior of panelboards. Remove paint splatters and other spots. Vacuum dirt and debris; do not use compressed air to assist in cleaning. Repair exposed surfaces to match original finish.

END OF SECTION 26 24 16

X:\Specs\140143\262416 panelboards.doc

SECTION 26 27 13 - ELECTRICITY METERING (UTILITY)

PART 1 - GENERAL

1.1 RELATED DOCUMENTS

A. Drawings and general provisions of the Contract, including General and Supplementary Conditions apply to this Section.

B. Related Section: The following sections contain requirements that relate to this section:

1. Section 26 05 00 “Common Work Results for Electrical”.

2. Section 26 24 13 “Switchboards”.

1.2 SUMMARY

A. Section includes equipment for electricity metering by utility company.

1.3 DEFINITIONS

A. KY Pulse: Term used by the metering industry to describe a method of measuring consumption of electricity that is based on a relay opening and closing in response to the rotation of the disk in the meter.

1.4 ACTION SUBMITTALS

A. Product Data: For each type of product indicated.

B. Shop Drawings: For electricity-metering equipment.

1. Dimensioned plans and sections or elevation layouts.

2. Wiring Diagrams: For power, signal, and control wiring. Identify terminals and wiring designations and color-codes to facilitate installation, operation, and maintenance. Indicate recommended types, wire sizes, and circuiting arrangements for field-installed wiring, and show circuit protection features.

1.5 INFORMATIONAL SUBMITTALS

A. Field quality-control reports.

1.6 RELATED STANDARDS

A. The modular tenant metering and all accessories shall be designed, manufactured and tested in accordance with the latest applicable standards of the following:

1. ANSI.

2. NEMA PB2, PB1.

3. UL50, UL67, UL414, UL 489.

4. NEC NYC Electrical Code.

1.7 QUALITY ASSURANCE

A. Electrical Components, Devices, and Accessories: Listed and labeled as defined in New York City electrical code by a qualified testing agency, and marked for intended location and application.

B. Comply with NEMA PB-1.

1.8 DELIVERY, STORAGE, AND HANDLING

A. Receive, store, and handle modular meter center according to NECA 400.

1.9 PROJECT CONDITIONS

A. Interruption of Existing Electrical Service: Do not interrupt electrical service to facilities occupied by Owner or others unless permitted under the following conditions and then only after arranging to provide temporary electrical service according to requirements indicated:

1. Notify Architect no fewer than two days in advance of proposed interruption of electrical service.

2. Do not proceed with interruption of electrical service without Architect's written permission.

1.10 COORDINATION

A. Electrical Service Connections: Coordinate with utility companies and components they furnish as follows:

1. Comply with requirements of utilities providing electrical power services.

2. Coordinate installation and connection of utilities and services, including provision for electricity-metering components.

PART 2 - PRODUCTS

2.1 MANUFACTURERS

A. Manufacturers: Subject to compliance with requirements, available manufacturers offering products that may be incorporated into the Work include, but are not limited to, the following:

1. Eaton Electrical Inc.; Cutler-Hammer Business Unit.

2. General Electric Company; GE Consumer & Industrial - Electrical Distribution.

3. Siemens Energy & Automation, Inc.

4. Square D; a brand of Schneider Electric.

2.2 EQUIPMENT FOR ELECTRICITY METERING BY UTILITY COMPANY AT MAIN SERVICE EQUIPMENT

A. All electricity delivered to the project will be utility company metered through a main "house" metering installation except that:

1. Separate utility company metering installations will be incorporated for Police memorial vault equipment (police memorial fountain).

B. Provide meter pans and/or backboards and current transformers, cabinets for "house" metering and major tenant metering within the new utility structure.

C. Provide instrument wiring between all current transformer cabinets and meter pans and/or backboards.

D. Install current transformers furnished by the utility company.

E. Meters will be furnished and installed by the utility company.

F. All work for the metering installation shall be provided in accordance with instructions issued by the utility company.

G. Current-Transformer Cabinets: Comply with requirements of electrical-power utility company.

H. Meter Sockets: Comply with requirements of electrical-power utility company.

I. Meter Sockets: Steady-state and short-circuit current ratings shall exceed the available fault current at the equipment.

2.3 MODULAR METER CENTERS

A. The metering specified herein shall be designed and constructed for use in residential or commercial applications. The metering shall be compact, pre-bussed modular construction with the ability to add modules to either side in the future. The metering center shall meet all the requirements of the local utility company.

B. The meter center shall consist of an incoming service entrance module and meter modules. The modular metering shall be UL listed for a minimum 4 high stack in accordance with utility Co. requirements.

C. The meter socket devices shall have individual covers of ring or ringless as required by utility as required by utility style design. Meter sockets shall have a sealing provision.

1. The meter sockets shall be made of high impact resistant, non-tracking, glass reinforced polyester resin rated for continuous duty and shall be 7-jaw construction. Socket jaws shall be tin-plated copper with spring steel reinforced clips. Individual jaws can be replaced from the front. The sockets shall be rated as shown on the drawings. Phase balancing shall come factory installed AB, BC and AC and it shall be field modifiable. Coordinate with Uitlity Co. this device is to allow testing of meter without disconnecting tenant level bypass and horn are for use with Ringless types, test block is for use with ring type. Meter sockets shall be of the level bypass type, as required by utility company.

D. The joint stacks and meter base bus connections shall be bolted and accessible from the front. The joint stack shall be a single bolt construction using an assembly of glass reinforced polyester insulator disks sandwiched between heavy-duty conductor disks.

E. Provide bussed elbows where required by layout. Elbows shall be 3-phase, 4-wire with ampere rating as required by specific location.

F. The modular-tenant metering shall be continuous duty rated. The enclosure shall be built to NEMA 1R.

1. All modules shall have weather proof rain caps and padlockable tenant breaker covers. The enclosures shall be UL Listed rated fabricated from zinc-coated G90 steel and painted with an ANSI 61 light gray paint applied by electro-deposition process. The enclosures shall be mounted as shown on the drawing.

2. All modules shall have the conduits exit out the top.

3. Main tap box conduit entry shall be as indicated on the drawings.

G. Modular Meter Center Utility Compartments

1. The utility metering compartments shall be arranged in hot sequence. The metering compartments shall be barriered and covers shall have sealing provisions. The metering compartments shall meet local utility standards.

H. Accessory Components And Features

1. Accessory Set: Include tools and miscellaneous items as required for overcurrent protective device test, inspection, maintenance, and operation.

2. Switch and fuse units incorporated as part of meter centers shall be equipped with factory installed rejection clips to restrict fuses to types specified in, Section 26 28 02 "Selection of Overcurrent Devices." Modify or replace in field any incorrect fuse clips.

PART 3 - EXECUTION

3.1 FACTORY TESTING

A. The following standard factory tests shall be performed on the equipment provided under this section. All tests shall be in accordance with the latest version of ANSI and NEMA standards.

1. The switchboard shall be completely assembled, wired, adjusted and tested at the factory. After assembly, the complete switchboard will be tested for operation under simulated service conditions to assure the accuracy of the wiring and the functioning of all equipment. The main circuits shall be given a dielectric test of 2200 volts for one (1) minute between live parts and ground and between opposite polarities. The wiring and control circuits shall be given a dielectric test of 1500 volts for one (1) minute between live parts and ground.

B. The manufacturer shall provide three (3) certified copies of factory test reports.

3.2 INSPECTION

A. Examine area to receive switchboard to provide adequate clearance for switchboard installation.

B. Check that concrete pads are level and free of irregularities.

C. Start work only after unsatisfactory conditions are corrected.

3.3 FIELD QUALITY CONTROL

A. Inspect completed installation for physical damage, proper alignment, anchorage, and grounding.

B. Measure, using a Megger, the insulation resistance of each bus section phase-to-phase and phase-to-ground for one minute each, at minimum test voltage of 1000 volts dc; minimum acceptable value for insulation resistance is 1 megohm.

NOTE: Refer to manufacturer's literature for specific testing procedures.

C. Check tightness of accessible bolted bus joints using calibrated torque wrench per manufacturer's recommended torque values.

3.4 ADJUSTING

A. Adjust all operating mechanisms for free mechanical movement per manufacturers specifications.

B. Tighten bolted bus connections in accordance with manufacturer's instructions.

C. Adjust circuit breaker trip and time delay settings to values indicated, as instructed by the Architect/Engineer.

3.5 CLEANING

A. Touchup scratched or marred surfaces to match original finish using touch up paint provided by the manufacturer.

END OF SECTION 26 27 13

X:\Specs\140143\262713 electricity metering (utility).doc

SECTION 26 27 26 - WIRING DEVICES

PART 1 - GENERAL

1.1 RELATED DOCUMENTS

A. Drawings and general provisions of the Contract, including General and Supplementary Conditions apply to this Section.

1.2 SUMMARY

A. Section Includes:

1. Weather-resistant receptacles.

2. Snap switches and wall-box dimmers.

3. Solid-state fan speed controls.

4. Occupancy sensors.

5. Communications outlets.

1.3 DEFINITIONS

A. EMI: Electromagnetic interference.

B. GFCI: Ground-fault circuit interrupter.

C. RFI: Radio-frequency interference.

1.4 ADMINISTRATIVE REQUIREMENTS A.

Coordination:

1. Receptacles for Owner-Furnished Equipment: Match plug configurations.

2. Cord and Plug Sets: Match equipment requirements.

1.5 ACTION SUBMITTALS

A. Product Data: For each type of product.

B. Shop Drawings: List of legends and description of materials and process used for premarking wall plates.

1.6 INFORMATIONAL SUBMITTALS

A. Field quality-control reports.

PART 2 - PRODUCTS

2.1 MANUFACTURERS

A. Products: Subject to compliance with requirements, available products that may be incorporated into the Work include, but are not limited to, the following:

1. Cooper Wiring Devices; Division of Cooper Industries, Inc.

2. Hubbell Incorporated; Wiring Device-Kellems.

3. Leviton Mfg. Company, Inc.

4. Pass & Seymour/Legrand.

B. Source Limitations: Obtain each type of wiring device and associated wall plate from single source from single manufacturer.

2.2 GENERAL WIRING-DEVICE REQUIREMENTS

A. Wiring Devices, Components, and Accessories: Listed and labeled as defined in NFPA 70, by a qualified testing agency, and marked for intended location and application. B. Comply with NFPA 70 as amended by state and local codes.

C. Devices shall utilize screw terminals for wiring termination. Push in type connectors are not acceptable.

D. Devices that are manufactured for use with modular plug-in connectors may be substituted under the following conditions:

1. Connectors shall comply with UL 2459 and shall be made with stranding building wire.

2. Devices shall comply with the requirements in this Section.

2.3 STRAIGHT-BLADE RECEPTACLES

A. Convenience Receptacles, 125 V, 20 A: Comply with NEMA WD 1, NEMA WD 6 Configuration 5-20R, UL 498, and FS W-C-596.

2.4 GFCI RECEPTACLES

A. General Description:

1. Straight blade, feed-through type.

2. Comply with NEMA WD 1, NEMA WD 6, UL 498, UL 943 Class A, and FS W-C-596.

3. Include indicator light that shows when the GFCI has malfunctioned and no longer provides proper GFCI protection.

B. Duplex GFCI Convenience Receptacles, 125 V, 20 A:

1. Description: As specified above for convenience receptacles with GFCI features and with feed-thru capability.

C. Tamper-Resistant GFCI Convenience Receptacles, 125 V, 20 A:

1. Description: As specified above for tamper-resistant receptacles and for GFCI receptacles.

2.5 TOGGLE SWITCHES

A. Comply with NEMA WD 1, UL 20, and FS W-S-896.

B. Switches, 120/277 V, 20 A.

C. Weather-Resistant and Tamper-Resistant Convenience Receptacles, 125 V, 15 A: Comply with NEMA WD 1, NEMA WD 6 Configuration 5-20R, and UL 498. D. Fan Speed Controls:

1. Modular, 120-V, full-wave, solid-state units with integral, quiet on-off switches and audible frequency and EMI/RFI filters.

2. Comply with UL 1917.

3. Continuously adjustable slider 5 A. E. Telephone Outlet:

1. Description: Single RJ-11 jack for terminating two-pair UTP.

2.6 WALL PLATES

A. Single and combination types shall match corresponding wiring devices.

1. Material for Damp Locations: Cast aluminum with spring-loaded lift cover, and listed and labeled for use in wet and damp locations.

B. Wet-Location, Weatherproof Cover Plates: NEMA 250, complying with Type 3R, weatherresistant, die-cast aluminum with lockable cover. Enclosures for 120 Volt receptacles rated 20 Amperes or less shall be weatherproof whether or not the attachment plug cap is inserted.

2.7 FINISHES

A. Device Color:

1. Wiring Devices: White unless otherwise indicated or required by NFPA 70 or device listing.

PART 3 - EXECUTION

3.1 INSTALLATION

A. Comply with NECA 1, including mounting heights listed in that standard, unless otherwise indicated.

B. Coordination with Other Trades:

1. Protect installed devices and their boxes. Do not place wall finish materials over device boxes and do not cut holes for boxes with routers that are guided by riding against outside of boxes.

2. Keep outlet boxes free of plaster, drywall joint compound, mortar, cement, concrete, dust, paint, and other material that may contaminate the raceway system, conductors, and cables.

3. Install device boxes in brick or block walls so that the cover plate does not cross a joint unless the joint is troweled flush with the face of the wall.

4. Install wiring devices after all wall preparation, including painting, is complete. C.

Conductors:

1. Do not strip insulation from conductors until right before they are spliced or terminated on devices.

2. Strip insulation evenly around the conductor using tools designed for the purpose. Avoid scoring or nicking of solid wire or cutting strands from stranded wire.

3. The length of free conductors at outlets for devices shall meet provisions of NFPA 70,

Article 300, without pigtails. D. Device Installation:

1. Replace devices that have been in temporary use during construction and that were installed before building finishing operations were complete.

2. Keep each wiring device in its package or otherwise protected until it is time to connect conductors.

3. Do not remove surface protection, such as plastic film and smudge covers, until the last possible moment.

4. Connect devices to branch circuits using pigtails that are not less than 6 inches (152 mm) in length.

5. When there is a choice, use side wiring with binding-head screw terminals. Wrap solid conductor tightly clockwise, two-thirds to three-fourths of the way around terminal screw.

6. Use a torque screwdriver when a torque is recommended or required by manufacturer.

7. When conductors larger than No. 12 AWG are installed on 15- or 20-A circuits, splice No. 12 AWG pigtails for device connections.

8. Tighten unused terminal screws on the device.

9. When mounting into metal boxes, remove the fiber or plastic washers used to hold device-mounting screws in yokes, allowing metal-to-metal contact. E. Receptacle Orientation:

1. Install ground pin of vertically mounted receptacles up, and on horizontally mounted receptacles to the right.

2. Do not install receptacles in face-up position in countertops or similar work Surfaces.

3. Do not install receptacles in face-up position in seating areas and other similar surfaces unless the receptacle is part of listed furniture assembly, or installed in a listed floor box.

F. Device Plates: Do not use oversized or extra-deep plates.

3.2 IDENTIFICATION

A. Comply with Section 26 05 53 "Identification for Electrical Systems."

B. Identify each receptacle with panelboard identification and circuit number. Use hot, stamped, or engraved machine printing with black-filled lettering on face of plate, and durable wire markers or tags inside outlet boxes. Use red-filled lettering for devices supplied by generator.

C. Identify each receptacle which is controlled by an automatic control device or energy management system with the code required symbol.

3.3 FIELD QUALITY CONTROL

A. Tests for Convenience Receptacles:

1. Line Voltage: Acceptable range is 105 to 132 V.

2. Percent Voltage Drop under 15-A Load: A value of 6 percent or higher is unacceptable.

3. Ground Impedance: Values of up to 2 ohms are acceptable.

4. GFCI Trip: Test for tripping values specified in UL 1436 and UL 943.

5. Using the test plug, verify that the device and its outlet box are securely mounted.

6. Tests shall be diagnostic, indicating damaged conductors, high resistance at the circuit breaker, poor connections, inadequate fault current path, defective devices, or similar problems. Correct circuit conditions, remove malfunctioning units and replace with new ones, and retest as specified above.

B. Wiring device will be considered defective if it does not pass tests and inspections, replace with new and retest.

C. Prepare test and inspection reports.

END OF SECTION 26 27 26

X:\Specs\140143\262726 wiring devices.doc

SECTION 26 28 13 - FUSES

PART 1 - GENERAL

1.1 RELATED DOCUMENTS

A. Drawings and general provisions of the Contract, including General and Supplementary Conditions apply to this Section.

1.2 SUMMARY

A. Section Includes:

1. Cartridge fuses rated 600-V ac and less for use in control circuits enclosed switches switchboards.

2. Plug fuses rated 125-V ac and less for use in plug-fuse-type enclosed switches.

1.3 ACTION SUBMITTALS

A. Product Data: For each type of product indicated. Include construction details, material, dimensions, descriptions of individual components, and finishes for spare-fuse cabinets. Include the following for each fuse type indicated:

1. Ambient Temperature Adjustment Information: If ratings of fuses have been adjusted to accommodate ambient temperatures, provide list of fuses with adjusted ratings.

a. For each fuse having adjusted ratings, include location of fuse, original fuse rating, local ambient temperature, and adjusted fuse rating.

b. Provide manufacturer's technical data on which ambient temperature adjustment calculations are based.

2. Dimensions and manufacturer's technical data on features, performance, electrical characteristics, and ratings.

3. Coordination charts and tables and related data.

1.4 CLOSEOUT SUBMITTALS

A. Operation and Maintenance Data:

1. Ambient temperature adjustment information.

2. Current-limitation curves for fuses with current-limiting characteristics.

3. Time-current coordination curves (average melt) and current-limitation curves (instantaneous peak let-through current) for each type and rating of fuse.

4. Coordination charts and tables and related data.

1.5 MAINTENANCE MATERIAL SUBMITTALS

A. Furnish extra materials that match products installed and that are packaged with protective covering for storage and identified with labels describing contents.

1. Fuses: Equal to 10 percent of quantity installed for each size and type, but no fewer than three of each size and type.

1.6 QUALITY ASSURANCE

A. Source Limitations: Obtain fuses, for use within a specific product or circuit, from single source from single manufacturer.

B. Electrical Components, Devices, and Accessories: Listed and labeled as defined in NFPA 70, by a qualified testing agency, and marked for intended location and application. C. Comply with NEMA FU 1 for cartridge fuses.

D. Comply with NFPA 70; including the amendments of local jurisdiction.

E. Comply with UL 248-11 for plug fuses.

1.7 PROJECT CONDITIONS

A. Where ambient temperature to which fuses are directly exposed is less than 40 deg F (5 deg C) or more than 100 deg F (38 deg C), apply manufacturer's ambient temperature adjustment factors to fuse ratings.

1.8 COORDINATION

A. Coordinate fuse ratings with utilization equipment nameplate limitations of maximum fuse size and with system short-circuit current levels.

PART 2 - PRODUCTS

2.1 MANUFACTURERS

A. Manufacturers: Subject to compliance with requirements, available manufacturers offering products that may be incorporated into the Work include, but are not limited to, the following:

1. Cooper Bussmann, Inc.

2. Edison Fuse, Inc.

3. Ferraz Shawmut, Inc.

4. Littelfuse, Inc.

PART 3 - EXECUTION

3.1 EXAMINATION

A. Examine fuses before installation. Reject fuses that are moisture damaged or physically damaged.

B. Examine holders to receive fuses for compliance with installation tolerances and other conditions affecting performance, such as rejection features.

C. Examine utilization equipment nameplates and installation instructions. Install fuses of sizes and with characteristics appropriate for each piece of equipment.

D. Evaluate ambient temperatures to determine if fuse rating adjustment factors must be applied to fuse ratings.

E. Proceed with installation only after unsatisfactory conditions have been corrected.

3.2 FUSE APPLICATIONS

A. Cartridge Fuses:

1. Service Entrance: Class L, time delay.

2. Feeders: Class L, RK1, RK5.

3. Motor Branch Circuits: Class RK1, Class RK5, time delay.

4. Other Branch Circuits: Class RK1, Class RK5, time delay.

5. Control Circuits: Class CC, fast acting.

3.3 INSTALLATION

A. Install fuses in fusible devices. Arrange fuses so rating information is readable without removing fuse.

3.4 IDENTIFICATION

A. Install labels complying with requirements for identification specified in Section 26 05 53 "Identification for Electrical Systems" and indicating fuse replacement information on inside door of each fused switch and adjacent to each fuse block, socket, and holder.

END OF SECTION 26 28 13

X:\Specs\140143\262813 fuses.doc

SECTION 26 28 16 - ENCLOSED SWITCHES AND CIRCUIT BREAKERS

PART 1 - GENERAL

1.1 RELATED DOCUMENTS

A. Drawings and general provisions of the Contract, including General and Supplementary Conditions, apply to this Section.

1.2 SUMMARY

A. Section Includes:

1. Fusible switches.

2. Nonfusible switches.

3. Molded-case circuit breakers (MCCBs).

4. Enclosures.

1.3DEFINITIONS A. NC:

Normally closed.

B. NO: Normally open.

C. SPDT: Single pole, double throw.

1.4 ACTION SUBMITTALS

A. Product Data: For each type of enclosed switch, circuit breaker, accessory, and component indicated. Include dimensioned elevations, sections, weights, and manufacturers' technical data on features, performance, electrical characteristics, ratings, accessories, and finishes.

1. Enclosure types and details for types other than NEMA 250, Type 1.

2. Current and voltage ratings.

3. Short-circuit current ratings (interrupting and withstand, as appropriate).

4. Include evidence of NRTL listing for series rating of installed devices.

5. Detail features, characteristics, ratings, and factory settings of individual overcurrent protective devices, accessories, and auxiliary components.

B. Shop Drawings: For enclosed switches and circuit breakers. Include plans, elevations, sections, details, and attachments to other work.

1. Wiring Diagrams: For power, signal, and control wiring.

1.5 CLOSEOUT SUBMITTALS

A. Operation and Maintenance Data: For enclosed switches and circuit breakers to include in emergency, operation, and maintenance manuals. In addition to items specified, include the following:

1. Manufacturer's written instructions for testing and adjusting enclosed switches and circuit breakers.

1.6 MAINTENANCE MATERIAL SUBMITTALS

A. Furnish extra materials that match products installed and that are packaged with protective covering for storage and identified with labels describing contents.

1. Fuses: Equal to 10 percent of quantity installed for each size and type, but no fewer than three of each size and type.

2. Fuse Pullers: Two for each size and type.

1.7 QUALITY ASSURANCE

A. Source Limitations: Obtain enclosed switches and circuit breakers, overcurrent protective devices, components, and accessories, within same product category, from single source from single manufacturer.

B. Product Selection for Restricted Space: Drawings indicate maximum dimensions for enclosed switches and circuit breakers, including clearances between enclosures, and adjacent surfaces and other items. Comply with indicated maximum dimensions.

C. Electrical Components, Devices, and Accessories: Listed and labeled as defined in NFPA 70, by a qualified testing agency, and marked for intended location and application. D. Comply with NFPA 70 as amended by state and local codes.

1.8 PROJECT CONDITIONS

A. Environmental Limitations: Rate equipment for continuous operation under the following conditions unless otherwise indicated:

1. Ambient Temperature: Not less than minus 22 deg F (minus 30 deg C) and not exceeding 104 deg F (40 deg C).

2. Altitude: Not exceeding 6600 feet (2010 m).

B. Interruption of Existing Electric Service: Do not interrupt electric service to facilities occupied by Owner or others unless permitted under the following conditions and then only after arranging to provide temporary electric service according to requirements indicated:

1. Notify Architect no fewer than seven days in advance of proposed interruption of electric service.

2. Indicate method of providing temporary electric service.

3. Do not proceed with interruption of electric service without Architect's written permission.

4. Comply with NFPA 70E.

1.9 COORDINATION

A. Coordinate layout and installation of switches, circuit breakers, and components with equipment served and adjacent surfaces. Maintain required workspace clearances and required clearances for equipment access doors and panels.

PART 2 - PRODUCTS

2.1 FUSIBLE SWITCHES

A. Manufacturers: Subject to compliance with requirements, available manufacturers offering products that may be incorporated into the Work include, but are not limited to, the following:

1. Eaton Electrical Inc.; Cutler-Hammer Business Unit.

2. General Electric Company; GE Consumer & Industrial - Electrical Distribution.

3. Siemens Energy & Automation, Inc.

4. Square D; a brand of Schneider Electric.

B. Type HD, Heavy Duty, Single Throw, 800 A and Smaller: UL 98 and NEMA KS 1, horsepower rated, with clips or bolt pads to accommodate specified fuses, lockable handle with capability to accept three padlocks, and interlocked with cover in closed position.

C. Enclosed Fusible Switch, 1200 A and Larger: Bolted pressure type, UL 977; operating mechanism shall utilize a rotary-mechanical bolting action to produce and maintain high clamping pressure on the switch blade after it engages the stationary contacts.

D. Enclosed Fusible Switch Supplying Step-Up Transformer: High-Pressure Butt Type Contact (HPC); UL 977, operating mechanism shall use butt-type contacts and a spring-charged mechanism to produce and maintain high contact pressure when switch is closed. E. Accessories:

1. Equipment Ground Kit: Internally mounted and labeled for copper and aluminum ground conductors.

2. Neutral Kit: Internally mounted; insulated, capable of being grounded and bonded; labeled for copper and aluminum neutral conductors.

3. Isolated Ground Kit: Internally mounted; insulated, capable of being grounded and bonded; labeled for copper and aluminum neutral conductors.

4. Class R Fuse Kit: Provides rejection of other fuse types when Class R fuses are specified.

5. Lugs: Suitable for number, size, and conductor material.

6. Service-Rated Switches: Labeled for use as service equipment.

2.2 NONFUSIBLE SWITCHES

A. Manufacturers: Subject to compliance with requirements, available manufacturers offering products that may be incorporated into the Work include, but are not limited to, the following:

1. Eaton Electrical Inc.; Cutler-Hammer Business Unit.

2. General Electric Company; GE Consumer & Industrial - Electrical Distribution.

3. Siemens Energy & Automation, Inc.

4. Square D; a brand of Schneider Electric.

B. Type HD, Heavy Duty, Single Throw, 1200 A and Smaller: UL 98 and NEMA KS 1, horsepower rated, lockable handle with capability to accept three padlocks, and interlocked with cover in closed position.

C. Accessories:

1. Equipment Ground Kit: Internally mounted and labeled for copper and aluminum ground conductors.

2. Neutral Kit: Internally mounted; insulated, capable of being grounded and bonded; labeled for copper and aluminum neutral conductors.

3. Isolated Ground Kit: Internally mounted; insulated, capable of being grounded and bonded; labeled for copper and aluminum neutral conductors.

2.3 MOLDED-CASE CIRCUIT BREAKERS

A. Manufacturers: Subject to compliance with requirements, available manufacturers offering products that may be incorporated into the Work include, but are not limited to, the following:

1. Eaton Electrical Inc.; Cutler-Hammer Business Unit.

2. General Electric Company; GE Consumer & Industrial - Electrical Distribution.

3. Siemens Energy & Automation, Inc.

4. Square D; a brand of Schneider Electric.

2.4 ENCLOSURES

A. Enclosed Switches and Circuit Breakers: NEMA AB 1, NEMA KS 1, NEMA 250, and UL 50, to comply with environmental conditions at installed location.

1. Indoor, Dry and Clean Locations: NEMA 250, Type 1.

2. Outdoor Locations: NEMA 250, Type 3R.

3. Marine Areas: NEMA 250, Type 4X, stainless steel.

4. Other Wet or Damp, Indoor Locations: NEMA 250, Type 4.

5. Indoor Locations Subject to Dust, Falling Dirt, and Dripping Noncorrosive Liquids: NEMA 250, Type 12.

6. Hazardous Areas Indicated on Drawings: NEMA 250, Type 7 or as required for the Division and Group

7. Finish: Manufacturer's standard paint applied to factory-assembled and -tested enclosures before shipping.

PART 3 - EXECUTION

3.1 EXAMINATION

A. Examine elements and surfaces to receive enclosed switches and circuit breakers for compliance with installation tolerances and other conditions affecting performance of the Work. B. Proceed with installation only after unsatisfactory conditions have been corrected.

3.2 INSTALLATION

A. Install individual wall-mounted switches and circuit breakers with tops at uniform height unless otherwise indicated.

B. Temporary Lifting Provisions: Remove temporary lifting eyes, channels, and brackets and temporary blocking of moving parts from enclosures and components. C. Install fuses in fusible devices.

D. Comply with NECA 1.

3.3 IDENTIFICATION

A. Comply with requirements in Section 26 05 53 "Identification for Electrical Systems."

1. Identify field-installed conductors, interconnecting wiring, and components; provide warning signs.

2. Label each enclosure with engraved metal or laminated-plastic nameplate mounted with corrosion-resistant screws.

3.4 CONNECTIONS

A. Install equipment grounding connections for switches and circuit breakers with ground continuity to main electrical ground bus.

B. Install power wiring. Install wiring between switches and circuit breakers, and control and indication devices.

C. Install control circuit lockout wiring between disconnect switches and VFC’s.

D. Tighten electrical connectors and terminals according to manufacturer's published torquetightening values. If manufacturer's torque values are not indicated, use those specified in UL 486A and UL 486B.

3.5 FIELD QUALITY CONTROL

A. Perform tests and inspections.

B. Acceptance Testing Preparation:

1. Test insulation resistance for each enclosed switch and circuit breaker, component, connecting supply, feeder, and control circuit.

2. Test continuity of each circuit.

C. Tests and Inspections:

1. Perform each visual and mechanical inspection and electrical test stated in NETA Acceptance Testing Specification. Certify compliance with test parameters.

2. Correct malfunctioning units on-site, where possible, and retest to demonstrate compliance; otherwise, replace with new units and retest.

3. Perform the following infrared scan tests and inspections and prepare reports:

a. Initial Infrared Scanning: After Substantial Completion, but not more than 60 days after Final Acceptance, perform an infrared scan of each enclosed switch and circuit breaker. Remove front panels so joints and connections are accessible to portable scanner.

b. Follow-up Infrared Scanning: Perform an additional follow-up infrared scan of each enclosed switch and circuit breaker 11 months after date of Substantial Completion.

c. Instruments and Equipment: Use an infrared scanning device designed to measure temperature or to detect significant deviations from normal values. Provide calibration record for device.

4. Test and adjust controls, remote monitoring, and safeties. Replace damaged and malfunctioning controls and equipment.

D. Enclosed switches and circuit breakers will be considered defective if they do not pass tests and inspections.

E. Prepare test and inspection reports, including a certified report that identifies enclosed switches and circuit breakers and that describes scanning results. Include notation of deficiencies detected, remedial action taken, and observations after remedial action.

3.6 ADJUSTING

A. Adjust moving parts and operable components to function smoothly, and lubricate as recommended by manufacturer.

B. Set field-adjustable circuit-breaker trip ranges as required by overcurrent protective device coordination study.

END OF SECTION 26 28 16

X:\Specs\140143\262816 enclosed switches and circuit breakers.doc

SECTION 26 43 13 - SURGE PROTECTIVE DEVICES (SPDs) – 1 KV OR LESS

PART 1 - GENERAL

1.1 SECTION INCLUDES

A. This section includes the following basic electrical materials and methods to complement other Division 26 Sections.

B. This Section includes surge protective devices for low-voltage power, control, and communication equipment.

C. Related Sections include the following:

1. Division 26 Section "Switchboards" for factory-installed surge protective devices.

1.2 RELATED DOCUMENTS

A. Drawings and general provisions of Contract, including General and Supplementary Conditions, apply to this section.

B. Related Section: The following Sections contain requirements that relate to this Section:

1. Section 26 05 00 “Common Work Results for Electrical”.

2. This section is a part of each Division 26.

1.3 SUBMITTALS

A. Product Data: For each type of product indicated. Include rated capacities; shipping, installed, and operating weights; furnished specialties; and accessories.

B. Product Certificates: Signed by manufacturers of surge protective devices, certifying that products furnished comply with the following testing and labeling requirements:

1. UL 1449, Third Edition listing and classification.

C. Field Test Reports: Written reports of tests specified in Part 3 of this Section. Include the following:

1. Test procedures used.

2. Test results that comply with requirements.

3. Failed test results and corrective action taken to achieve requirements.

D. Maintenance Data: Surge protective devices to include maintenance manuals specified in Division 01.

1.4 QUALITY ASSURANCE

A. Source Limitations: Obtain suppression devices and accessories through one source from a single manufacturer.

B. Electrical Components, Devices, and Accessories: Listed and labeled as defined in New York City Electrical Code, Article 100, by a testing agency acceptable to authorities having jurisdiction, and marked for intended use.

C. UL Compliance: Comply with UL 1283, "Electromagnetic Interference Filters," and UL 1449, Third Edition "Surge Protective Devices."

D. Comply with New York City Electrical Code, Article 285.

E. UL 96A Lighting Protection Master Label compliant.

1.5 PROJECT CONDITIONS

A. Placing into Service: Do not energize or connect service entrance equipment to their sources until the surge protective devices are installed and connected.

B. Service Conditions: Rate surge protective devices for continuous operation under the following conditions, unless otherwise indicated:

1. Maximum Continuous Operating Voltage: Not less than 115 percent of nominal system operating voltage. The maximum value shall be a tested value as part of the nominal discharge surge current test.

2. Operating Temperature: 30 to 120 deg. F (0 to 50 deg. C).

3. Humidity: 0 to 85 percent, noncondensing.

4. Altitude: Less than 20,000 feet (6000 m) above sea level.

PART 2 – PRODUCTS

2.1 MANUFACTURERS

A. Available Manufacturers: Subject to compliance with requirements, manufacturers offering products that may be incorporated into the Work include, but are not limited to, the following:

1. Current Technology; a brand of Thomas & Betts

2. Cutler-Hammer, Inc./Eaton

3. Mersen

4. Siemens Energy & Automation

5. Square D, a brand of Schneider Electric

2.2 SERVICE ENTRANCE SPDs

A. Surge Protective Device Description: Non-modular type with the following features and accessories:

1. Type 1 SPD, 20kA nominal discharge current rating.

2. LED indicator lights for power and protection status.

3. Audible alarm, with silencing switch, to indicate when protection has failed.

4. One set of dry contacts rated at 5 A, 250-V AC, for remote monitoring of protection status.

5. Fuses, rated at 200-kA interrupting capacity.

B. Peak Single-Impulse Surge Current Rating: 150 kA per mode or 300 kA per phase.

C. Connection Means: Permanently wired.

D. Protection modes and UL 1449 Voltage Protective Rating (VPR) for grounded wye circuits with voltages of 480Y/277; 3-phase, 4-wire circuits, are as follows:

1. Line to Neutral: 1200 V for 480Y/277.

2. Line to Ground: 1200 V for 480Y/277.

3. Neutral to Ground: 1200 V for 480Y/277.

4. Line to line 2000 V for 480Y/277.

2.3 ENCLOSURES

A. NEMA 250, with type matching the enclosure of panel or device being protected, unless factory installed within equipment enclosure.

PART 3 - EXECUTION

3.1 INSTALLATION OF SURGE PROTECTIVE DEVICES

A. Install devices at service entrance on or load side of service switch, with ground lead bonded to service entrance ground.

B. Do not exceed manufacturer's recommended lead length. Do not bond neutral and ground.

1. Provide multipole, overcurrent protective device as a dedicated disconnect for the suppressor, unless otherwise indicated. Follow applicable installation instructions from the SPD manufacturer.

3.2 CONNECTIONS

A. Tighten electrical connectors and terminals according to manufacturer's published torquetightening values. If manufacturer's torque values are not indicated, use those specified in UL 486A.

3.3 FIELD QUALITY CONTROL

A. Testing: Perform the following field quality-control testing:

1. After installing surge protective devices, but before electrical circuitry has been energized, test for compliance with requirements.

2. Complete startup checks according to manufacturer's written instructions.

3. Perform each visual and mechanical inspection and electrical test stated in NETA ATS, Section 7.19. Certify compliance with test parameters.

B. Repair or replace malfunctioning units. Retest after repairs or replacements are made.

END OF SECTION 26 43 13

X:\Specs\140143\264313 surge protective devices.doc

SECTION 26 51 00 - LIGHTING

PART 1 - GENERAL

1.1 RELATED DOCUMENTS

A. Drawings and general provisions of the Contract, including General and Supplementary Conditions, apply to this Section.

1.2 SUMMARY

A. This Section includes interior and exterior luminaires, emergency lighting units, exit signs, lamps, ballasts, drivers, and accessories.

1.3 DEFINITIONS

A. CCT: Correlated Color Temperature. The standard unit of color temperature measurement is expressed in Kevin (K)

B. CRI: Color Rendering Index. A method for describing the effect of light source on the color appearance of objects.

C. Fixture: See "Luminaire."

D. Emergency Lighting Unit: A lighting unit with internal or external emergency battery powered supply and the means for controlling and charging the battery and unit operation.

E. LED: Light Emitting Diode. A solid-state semiconductor device that allows current to flow in one direction and convert electrical energy to visible light.

F. Lumen: Measured output of lamp and luminaire, or both.

G. Luminaire: Complete lighting unit, including lamp, optical components, power supplies, and housing.

1.4 ACTION SUBMITTALS

A. Product Data: For each type of product.

1. Arrange in order of luminaire designation.

2. Include data on features, accessories, and finishes.

3. Include physical description and dimensions of luminaires.

4. Include battery and charger data for emergency lighting units.

5. Include lamp life, output (lumens, CCT, and CRI), and energy efficiency data.

6. Include ballast data, including ballast factor.

7. Photometric data and adjustment factors based on laboratory tests , complying with IESNA Lighting Measurements Testing and Calculation Guides, of each luminaire type.

The adjustment factors shall be for lamps and accessories identical to those indicated for the luminaire as applied in this Project.

a. Testing Agency Certified Data: For indicated luminaires, photometric data certified by a qualified independent testing agency. Photometric data for remaining luminaires shall be certified by manufacturer's laboratory with a current accreditation under the NVLAP for Energy Efficient Lighting Products.

b. LED products are tested in accordance with IESNA LM-79-08. Include L70 performance results.

8. Submit project-specific, factory-produced shop drawings for linear fluorescent mounted in continuous rows. Drawings shall show housing lengths, lamping layout, joiners, supports, endcaps, corners, and unlighted end sections, as applicable, for all unique row lengths, suspension installation hardware or components.

9. Submit dimming ballast compatibility certificates signed by the lighting control system manufacturer certifying that proposed dimming ballasts are compatible with proposed dimming systems.

10. For air handling luminaires, submit air, thermal, and sound performance data. Provide certified results of independent laboratory tests indicating:

a. Air and Thermal Performance Data: For air-handling luminaires. Furnish data required in "Action Submittals" Article in Section 23 37 13 "Diffusers, Registers, and
Grilles."

b. Sound Performance Data: For air-handling luminaires. Indicate sound power level and sound transmission class in test reports certified according to standards specified in Section 23 37 13 "Diffusers, Registers, and Grilles."

c. Heat transfer rate as a function of airflow (required for heat removal luminaires only).

B. Shop Drawings: For nonstandard or custom luminaires.

1. Include plans, elevations, sections, and mounting and attachment details.

2. Include details of luminaire assemblies. Indicate dimensions, weights, loads, required clearances, method of field assembly, components, and location and size of each field connection.

3. Include diagrams for power, signal, and control wiring.

C. Product Schedule: For luminaires and lamps. Use same designations indicated on Drawings.

1.5 INFORMATIONAL SUBMITTALS

A. Coordination Drawings: Reflected ceiling plan(s) and other details, drawn to scale, on which the following items are shown and coordinated with each other, using input from installers of the items involved:

1. Luminaires.

B. Qualification Data: For testing laboratory providing photometric data for luminaires.

C. Product Test Reports: For each luminaire, for tests performed by manufacturer and witnessed by a qualified testing agency.

1.6 CLOSEOUT SUBMITTALS

A. Operation and Maintenance Data: For luminaires and lighting systems to include in operation and maintenance manuals.

1. Provide a list of all lamp types used on Project; use ANSI and manufacturers' codes.

1.7 MAINTENANCE MATERIAL SUBMITTALS

A. Furnish extra materials that match products installed and that are packaged with protective covering for storage and identified with labels describing contents.

1. Lamps: Furnish at least one of each type.

2. Diffusers and Lenses: Furnish at least one of each type.

3. Ballasts: Furnish at least one of each type.

4. Luminaire-mounted emergency battery pack: One for every 50 emergency lighting units.

5. LED’s: The spare component shall be the smallest discrete element that the manufacturer recommends servicing in the field without voiding the warranty. In some cases, this will be a snap-in diode. In other cases, it will be a replacement fixture. Furnish at least one of each type.

6. LED drivers: Furnish at least one of each type.

1.8 QUALITY ASSURANCE

A. Luminaire Photometric Data Testing Laboratory Qualifications: Luminaire manufacturer's laboratory accredited under the NVLAP for Energy Efficient Lighting Products.

B. Luminaire Photometric Data Testing Laboratory Qualifications: Provided by an independent agency, with the experience and capability to conduct the testing indicated, that is an NRTL as defined by OSHA in 29 CFR 1910.7, accredited under the NVLAP for Energy Efficient Lighting Products, and complying with the applicable IES testing standards. C. Comply with NFPA 70 as amended by state and local codes.

D. Electrical Components of luminaires are listed and labeled by UL where applicable. (New York Electrical Code)

E. Provide luminaires and accessory components specified in this Section that are listed and labeled for their indicated use and installation conditions on Project.

1. Luminaires specified for installation in damp or wet locations are listed and labeled for use in such locations.

2. Luminaires specified for installation in insulated ceilings are IC-rated if insulation comes within 3 inches (76 mm) of sides of luminaire housings, or within 6 inches (152 mm) of top of luminaire housings.

3. Luminaires specified for installation in hazardous locations conform to UL 844.

4. Luminaires specified for installation underwater comply with UL 676.

1.9 DELIVERY, STORAGE, AND HANDLING

A. Protect finishes of exposed surfaces by applying a strippable, temporary protective covering before shipping.

1.10 COORDINATION

A. For ceiling-mounted luminaires, coordinate luminaires, mounting hardware, and trim with ceiling system and other items, including work of other trades, which must be mounted on ceiling or in ceiling space.

B. Luminaires, ballasts, drivers, lamps and other components meet or exceed the requirements of all applicable federal, state, and/or municipal energy codes.

1.11 WARRANTY

A. Warranty: Manufacturer and Installer agree to repair or replace components of luminaires that fail in materials or workmanship within specified warranty period.

1. Warranty Period: Two years from date of Substantial Completion.

B. Special Warranty for Light Emitting Diodes: Manufacturer's standard form in which manufacturer agrees to repair or replace products which fail in materials or workmanship within specified warranty period.

1. Warranty Period for Light Emitting Diodes: Five years from date of Substantial Completion.

2. Warranty Period for Light Emitting Diode Power Supplies and Drivers: Five years from date of Substantial Completion.

C. Special Warranty for Emergency Lighting Batteries: Manufacturer's standard form in which manufacturer of battery-powered emergency lighting unit agrees to repair or replace components of rechargeable batteries that fail in materials or workmanship within specified warranty period.

1. Warranty Period for Emergency Power Unit Batteries: Five years from date of Substantial Completion. Full warranty shall apply for the entire warranty period.

PART 2 - PRODUCTS

2.1 MANUFACTURERS

A. Subject to compliance with project requirements, luminaires that may be incorporated into the Work include, but are not limited to, the products specified in the Luminaire Schedule. Where three or more manufacturers are indicated for each luminaire type, no other manufacturers will be considered. Where one manufacturer is indicated for each luminaire type, other manufacturers will be considered only if the engineer, architect, or lighting consultant can determine that the proposed equipment is equal to the specified equipment.

B. Ballasts shall be manufactured by Universal, Advance, Robertson Worldwide, Osram/Sylvania, or Lutron unless otherwise indicated.

2.2 LUMINAIRE REQUIREMENTS

A. Electrical Components, Devices, and Accessories: Listed and labeled as defined in NFPA 70, by a qualified testing agency, and marked for intended location and application.

B. NRTL Compliance: Luminaires for hazardous locations shall be listed and labeled for indicated class and division of hazard by an NRTL.

C. FM Global Compliance: Luminaires for hazardous locations shall be listed and labeled for indicated class and division of hazard by FM Global.

D. UL Compliance: Comply with applicable UL standards.

1. Fluorescent Fixtures conform to UL 1570.

2. Incandescent Fixtures conform to UL 1571.

3. High Intensity Discharge (HID) Fixtures conform to UL 1572.

4. Track-Lighting Systems conform to UL 1574.

5. Exit Signs conform to UL 924.

E. Lamp base shall comply with applicable ANSI standards.

F. Luminaire shall comply with applicable NEMA standards.

G. Nominal Operating Voltage: as indicated on the drawings. Luminaires and components shall be suitable for operation at the voltage of the building circuits to which they are connected.

H. Lampholders shall be suitable for operation of the specified lamps and are set so that lamps are positioned in optically correct relation to all luminaire components. All lampholders comply with applicable requirements of ANSI C81. All fluorescent lampholders comply with UL 542.

I. Luminaires for use in damp or wet locations shall be suitably gasketed to prevent the entrance of moisture and shall be listed for such use.

J. Electromagnetic-Interference Filters: Factory installed to suppress conducted electromagnetic interference according to MIL-STD-461E. Fabricate luminaires with one filter on each ballast or driver indicated to require a filter.

K. Luminaires utilizing ballasts or transformers bear identification, by means of a label on the reflector or body, of the circuit voltage at which they are intended to operate.

L. Recessed incandescent luminaires incorporate integral thermal protection. When specified in luminaire schedule, provide luminaires with special wattage reduction labels for compliance with energy codes.

M. Luminaires are complete with all internal wiring and all flexible conduits, pigtails, and the like necessary for external connections. All wire utilized for connections to or between individual lamp sockets and lamp auxiliaries (i.e., wires which do not constitute "through circuit" wiring) are minimum #16 gauge, industry standard, fixture wire suitable for the temperature, current and voltage conditions to which it is subjected. Internal wiring contains a minimum number of splices. Splices in internal wiring are made with approved insulated "wire nut" type mechanical connectors, suitable for the temperature and voltage conditions to which they are subjected.

N. Luminaires specified with integral emergency battery packs (also known as emergency ballasts) incorporate a test switch and indicator light within the luminaire. Test switch and indicator light are discretely located, so that they are not visible from ordinary viewing angles, but so that they are readily accessible to maintenance personnel, as required by code. Luminaires incorporating emergency battery packs are wired so that they may be switched or dimmed as part of their assigned lighting control zone without causing the battery pack to energize the lamps.

O. General Construction:

1. Luminaires are constructed with joints made only by means of welded, brazed, screwed, or bolted construction methods. Soldered joints will not be permitted. No self-tapping screws, bled metal tapping methods, or rivets are employed for fastening any parts to or in any wireway or wiring chamber, for fastening any parts which must be removed to gain access to electrical components requiring service or replacing, or for fastening any electrical component or support for same.

2. All ferrous parts and supports, other than parts manufactured of stainless steel, are completely rustproofed after fabrication, and before finish coatings are applied. Rustproofing is by means of galvanizing, bonderizing, zinc plating, or by treatment with other industry standard rust-preventing processes providing rustproofing qualities equal to the processes mentioned above.

3. All screws, bolts, nuts and other fastening and latching hardware are cadmium or equivalent plated.

4. All metallic cast or extruded parts are close grained, sound, and free from imperfections or discolorations. Cast or extruded parts are rigid, true to pattern, and of ample weight and thickness. Cast or extruded parts are properly fitted, filed, ground buffed, and chased to provide finished surfaces and joints free of imperfection with all details or ornamentation brought out. Finished thickness of all cast parts is not less than 1/8 inch (3 mm).

5. Housings are constructed so that all electrical components are easily accessible and replaceable without removing housings from their mountings.

P. Sheet metal components are fabricated of steel, except as indicated. Form and support sheet metal to prevent warping and sagging.

Q. Doors, frames, and other means of internal access operate smoothly, free from light leakage under operating conditions, and are arranged to permit relamping without use of tools, unless indicated otherwise on drawings. Arrange doors, frames, lenses, diffusers, and other pieces to prevent accidental falling during relamping and when secured in operating position.

2.3 BALLASTS FOR LINEAR FLUORESCENT LAMPS

A. General Requirements for Electronic Ballasts:

1. Comply with UL 935 and with ANSI C82.11.

2. Designed for type and quantity of lamps served.

3. Ballasts shall be designed for full light output unless another ballast factor, dimmer, or bilevel control is indicated.

4. Sound Rating: Class A, except Class B for T12/HO and T12/Slimline lamp ballasts.

5. THD Rating: Less than 10 percent.

6. Transient Voltage Protection: IEEE C62.41.1 and IEEE C62.41.2, Category A or better.

7. Operating Frequency: 42 kHz or higher.

8. Lamp Current Crest Factor: 1.7 or less.

9. Ballast Factor: 0.88 or higher unless otherwise indicated.

10. Power Factor: 0.95 or higher.

B. Luminaires controlled by occupancy sensors shall have programmed-start ballasts.

C. Electronic Programmed-Start Ballasts Lamps: Comply with ANSI C82.11 and the following:

1. Lamp end-of-life detection and shutdown circuit for T5 diameter lamps.

2. Automatic lamp starting after lamp replacement.

D. Electromagnetic Ballasts: Comply with ANSI C82.11; energy saving, high-power factor, Class P, and having automatic-reset thermal protection.

1. Ballast Manufacturer Certification: Indicated by label.

E. Ballasts for Low-Temperature Environments:

1. Temperatures 0 Deg F (Minus 17 Deg C) and Higher: Electronic type rated for 0 deg F (minus 17 deg C) starting and operating temperature with indicated lamp types.

2. Where indicated for low temperature operation - temperatures Minus 20 Deg F (Minus 29 Deg C) and Higher: Electromagnetic type designed for use with indicated lamp types.

2.4 BALLASTS FOR COMPACT FLUORESCENT LAMPS

A. Description: Electronic-programmed rapid-start type, complying with UL 935 and with ANSI C 82.11, designed for type and quantity of lamps indicated. Ballast shall be designed for full light output unless dimmer or bi-level control is indicated:

1. Lamp end-of-life detection and shutdown circuit.

2. Automatic lamp starting after lamp replacement.

3. Sound Rating: Class A.

4. THD Rating: Less than 20 percent.

5. Transient Voltage Protection: IEEE C62.41.1 and IEEE C62.41.2, Category A or better.

6. Operating Frequency: 20 kHz or higher.

7. Lamp Current Crest Factor: 1.7 or less.

8. BF: 0.95 or higher unless otherwise indicated.

9. Power Factor: 0.95 or higher.

10. Interference: Comply with 47 CFR 18, Ch. 1, Subpart C, for limitations on EMI and RFI for nonconsumer equipment.

2.5 EMERGENCY POWER UNIT

A. Internal Type Emergency Power Unit: Self-contained, modular, battery-inverter unit, factory mounted within luminaire body and compatible with ballast.

1. Emergency Connection: Connect unswitched circuit to battery-inverter unit and switched circuit to luminaire ballast. Emergency battery-inverter unit is wired so that luminaire may be switched or dimmed as part of their assigned lighting control zone without causing the battery-inverter unit to energize the lamps while normal power is available.

2. Operation: Relay automatically turns lamp on when power-supply circuit voltage drops to 80 percent of nominal voltage or below. Lamp automatically disconnects from battery when voltage approaches deep-discharge level. When normal voltage is restored, relay disconnects lamps from battery, and battery is automatically recharged and floated on charger.

3. Fluorescent luminaire operation: Operate one lamp continuously upon loss of normal power. Minimum initial lumen output per lamp shall be:

a. T-5: 825 lumens

b. T-5 “biax” 2G11-base: 825 lumens

c. Compact Fluorescent: 650 lumens

4. Environmental Limitations: Rate equipment for continuous operation under the following conditions unless otherwise indicated:

a. Ambient Temperature: Less than 0 deg F (minus 18 deg C) or exceeding 104 deg F (40 deg C), with an average value exceeding 95 deg F (35 deg C) over a 24hour period.

b. Ambient Storage Temperature: Not less than minus 4 deg F (minus 20 deg C) and not exceeding 140 deg F (60 deg C).

c. Humidity: More than 95 percent (condensing).

d. Altitude: Not exceeding 3300 feet (1000 m).

5. Test Push-Button and Indicator Light: Visible and accessible without opening luminaire or entering ceiling space.

a. Push Button: Push-to-test type, in unit housing, simulates loss of normal power and demonstrates unit operability.

b. Indicator Light: LED indicates normal power on. Normal glow indicates trickle charge; bright glow indicates charging at end of discharge cycle.

6. Battery: Sealed, maintenance-free, lead-acid type.

7. Charger: Fully automatic, solid-state, constant-current type with sealed power transfer relay.

2.6 FLUORESCENT LAMPS

A. T5 rapid-start lamps, rated 28-W maximum, nominal length of 45.2 inches (1150 mm), 2900 initial lumens (minimum), CRI of 80 (minimum), color temperature of 3500 K, and average rated life of 20,000 hours unless otherwise indicated.

B. Compact Fluorescent Lamps: Four-pin, CRI of 80 (minimum), color temperature of 3500 K, average rated life of 10,000 hours at three hours of operation per start, and suitable for use with dimming ballasts unless otherwise indicated.

2.7 LED LUMINAIRES

A. LED shall have a rated source life of 50,000 hours. LED “rated source life” is defined as the time when a minimum of 70% of initial lumen output.

B. Correlated color temperature of light emitting diodes shall be as specified in the lighting fixture schedule. Where no indication is made in the fixture schedule, provide light emitting diodes with a correlated color temperature of 3,000 K

C. Light emitting diodes shall be binned such that they fall within a 4-step MacAdam ellipse surrounding their nominal rated color temperature.

D. Light emitting diode products are provided complete with all appurtenances and accessories necessary for operation, including but not limited to power supplies and drivers, heat sinks, optical components, etc.

E. Light emitting diode products which are connected to dimming systems shall be provided with dimmable power supplies and drivers which are compatible with the specified dimmer or dimming system.

F. Electronic Drivers: Include the following features unless otherwise indicated:

1. Minimum Starting Temperature: Minus 20 deg F (Minus 29 deg C).

2. Rated Ambient Operating Temperature: 130 deg F (54 deg C).

3. Sound Rating: Class A.

4. Total Harmonic Distortion Rating: Less than 20 percent.

5. Transient Voltage Protection: IEEE C62.41.1 and IEEE C62.41.2, Category A or better.

6. Power Factor: 0.90 or higher.

7. Interference: Comply with 47 CFR 18, Ch. 1, Subpart C, for limitations on electromagnetic and radio-frequency interference for nonconsumer equipment.

2.8 MATERIALS

A. Metal Parts: Free of sharp edges and burrs.

B. Sheet Metal Components: Steel unless otherwise indicated. Form and support to prevent warping and sagging.

C. Doors, Frames, and Other Internal Access: Smooth operating, free of light leakage under operating conditions, and designed to permit relamping without use of tools. Designed to prevent doors, frames, lenses, diffusers, and other components from falling accidentally during relamping and when secured in operating position. D. Lenses, Diffusers, and Globes:

1. Glass: Annealed crystal glass unless otherwise indicated.

2. Acrylic Lighting Diffusers: One hundred percent virgin acrylic plastic, with high resistance to yellowing and other changes due to aging, exposure to heat, and UV radiation.

3. Lens thickness is at least 1/8 inch (3mm), unless otherwise noted. E. Housings:

1. Extruded-aluminum housing and heat sink.

2. Finish as indicated.

F. Factory-Applied Labels: Comply with UL 1598. Include recommended lamps. Locate labels where they will be readily visible to service personnel, but not seen from normal viewing angles when lamps are in place.

1. Labels shall include the following lamp characteristics:

a. "USE ONLY" and include specific lamp type.

b. Lamp diameter, shape, size, wattage, and coating.

c. Ballast type for fluorescent and HID luminaires.

d. CCT and CRI for all luminaires.

2.9 METAL FINISHES

A. Variations in finishes are unacceptable in the same piece. Variations in finishes of adjoining components are acceptable if they are within the range of approved Samples and if they can be and are assembled or installed to minimize contrast.

2.10 LUMINAIRE SUPPORT COMPONENTS

A. Comply with requirements in Section 26 05 29 "Hangers and Supports for Electrical Systems" for channel and angle iron supports and nonmetallic channel and angle supports.

B. Single-Stem Hangers: 1/2-inch (13-mm) steel tubing with swivel ball fittings and ceiling canopy. Finish same as luminaire.

C. Wires: ASTM A 641/A 641M, Class 3, soft temper, zinc-coated steel, 12 gage (2.68 mm).

D. Rod Hangers: 3/16-inch (5 mm) minimum diameter, cadmium-plated, threaded steel rod.

E. Hook Hangers: Integrated assembly matched to luminaire, line voltage, and equipment with threaded attachment, cord, and locking-type plug.

PART 3 - EXECUTION

3.1 EXAMINATION

A. Examine substrates, areas, and conditions, with Installer present, for compliance with requirements for installation tolerances and other conditions affecting performance of the Work.

B. Examine roughing-in for luminaire to verify actual locations of luminaire and electrical connections before luminaire installation.

C. Proceed with installation only after unsatisfactory conditions have been corrected.

3.2 TEMPORARY LIGHTING

A. If approved by the Architect, use permanent luminaires for temporary lighting. Install and energize the minimum number of luminaires necessary. When construction is sufficiently complete, remove the temporary luminaires; disassemble, clean, and install new lamps; and reinstall luminaires.

3.3 INSTALLATION

A. Comply with NECA 1.

B. Remote Mounting of Ballasts: Distance between the ballast and luminaire shall not exceed that recommended by ballast manufacturer. Verify, with ballast manufacturers, maximum distance between ballast and luminaire.

C. Remote Mounting of LED Drivers: Distance between the driver and luminaire shall not exceed that recommended by driver manufacturer. Verify, with driver manufacturers, maximum distance between driver and luminaire.

D. Install luminaires level, plumb, and square with ceilings and walls unless otherwise indicated.

E. Install lamps in each luminaire.

F. Coordinate layout and installation of luminaires and suspension system with other construction that penetrates ceilings or is supported by them. G. Supports:

1. Sized and rated for luminaire weight.

2. Able to maintain luminaire position after cleaning and relamping.

3. Provide support for luminaire without causing deflection of ceiling or wall.

4. Luminaire mounting devices shall be capable of supporting a horizontal force of 100 percent of luminaire weight and vertical force of 400 percent of luminaire weight. H. Suspended Lighting Luminaire Support:

1. Pendants and Rods: Where longer than 48 inches (1200 mm), brace to limit swinging.

3.4 IDENTIFICATION

A. Identify system components, wiring, cabling, and terminals in Section 26 05 53 "Identification for Electrical Systems."

3.5 FIELD QUALITY CONTROL

A. Perform the following tests and inspections:

1. Operational Test: After installing luminaires, switches, and accessories, and after electrical circuitry has been energized, test units to confirm proper operation.

2. Test for Emergency Lighting: Interrupt power supply to demonstrate proper operation. Verify transfer from normal power to battery power and retransfer to normal.

3. For emergency power units perform the following:

a. Charge emergency power units and batteries a minimum of one hour and depress switch to conduct short-duration test.

b. Charge emergency power units and batteries a minimum of 24 hours and conduct one-hour discharge test.

B. Luminaire will be considered defective if it does not pass operation tests and inspections.

C. Prepare test and inspection reports.

3.6 STARTUP SERVICE

A. Burn-in all lamps that require specific aging period to operate properly, prior to occupancy by Owner.

3.7 ADJUSTING

A. Occupancy Adjustments: When requested within 12 months of date of Substantial Completion, provide on-site assistance in adjusting the direction of aim of luminaires to suit occupied conditions. Make up to two visits to Project during other-than-normal hours for this purpose. Some of this work may be required during hours of darkness.

1. During adjustment visits, inspect all luminaires. Replace lamps or luminaires that are defective.

2. Parts and supplies shall be manufacturer's authorized replacement parts and supplies.

B. Adjust the aim of luminaires in the presence of the Architect.

END OF SECTION 26 51 00

X:\Specs\140143\265100 lighting.doc

SECTION 31 23 16 - EXCAVATION

PART 1 GENERAL 1.01 SECTION INCLUDES

A. Excavating for footings, slabs-on-grade, site structures, and utilities within the building.

1.02 RELATED REQUIREMENTS

A. Section 01 70 00 - Execution and Closeout Requirements: General requirements for dewatering of excavations and water control.

B. Section 02 41 00 - Demolition: Shoring and underpinning.

C. Section 31 23 23 - Fill: Fill materials, filling, and compacting.

1.03 SUBMITTALS

A. See Section 01 30 00 - Administrative Requirements, for submittal procedures.

B. Field Quality Control Submittals: Document visual inspection of load-bearing excavated surfaces.

1.04 PRICE AND PAYMENT PROCEDURES

A. See Section 01 22 00 - Unit Prices, for general requirements applicable to unit prices for excavation.

B. Unit Price #1: Excavating Soil Materials:
   1. Measurement method: By the cubic yard.
   2. Includes: Excavating to required elevations, loading and placing materials in stockpile.
   3. Does Not Include Over-Excavation: Payment will not be made for over-excavated work nor for replacement materials.

C. See Section 31 23 23 - Fill, for measurement and payment provisions related to fill.

1.05 PROJECT CONDITIONS

A. Verify that survey bench mark and intended elevations for the Work are as indicated.

PART 2 PRODUCTS - NOT USED PART 3 EXECUTION 3.01 EXAMINATION

A. Verify that survey bench mark and intended elevations for the work are as indicated.

3.02 PREPARATION

A. Identify required lines, levels, contours, and datum locations.

B. Locate, identify, and protect utilities that remain and protect from damage.

C. Protect bench marks, survey control points, existing structures, fences, sidewalks, paving, and curbs from excavating equipment and vehicular traffic.

D. Protect plants, rock outcroppings, and other features to remain.

3.03 EXCAVATING

A. Underpin adjacent structures that could be damaged by excavating work.

B. Excavate to accommodate new structures and construction operations.

C. Notify Architect of unexpected subsurface conditions and discontinue affected Work in area until notified to resume work.

D. Preparation for Piling Work: Excavate to working elevations. Coordinate special requirements for piling.

E. Slope banks of excavations deeper than 4 feet to angle of repose or less until shored.

F. Do not interfere with 45 degree bearing splay of foundations.

G. Cut utility trenches wide enough to allow inspection of installed utilities.

H. Hand trim excavations. Remove loose matter.

I. Remove lumped subsoil, boulders, and rock up to 1/3 cu yd measured by volume.

J. Correct areas that are over-excavated and load-bearing surfaces that are disturbed; see Section 31 23 23.

K. Grade top perimeter of excavation to prevent surface water from draining into excavation.

L. Remove excavated material that is unsuitable for re-use from site.

M. Stockpile excavated material to be re-used in area designated on site in accordance with Section 31 22 00.

N. Remove excess excavated material from site.

3.04 FIELD QUALITY CONTROL

A. See Section 01 40 00 - Quality Requirements, for general requirements for field inspection and testing.

B. Provide for visual inspection of load-bearing excavated surfaces before placement of foundations.

3.05 PROTECTION

A. Prevent displacement of banks and keep loose soil from falling into excavation; maintain soil stability.

B. Protect bottom of excavations and soil adjacent to and beneath foundation from freezing.

END OF SECTION

SECTION 31 23 23 - FILL

PART 1 GENERAL 1.01 SECTION INCLUDES

A. Filling, backfilling, and compacting for slabs-on-grade, paving, and site structures.

B. Backfilling and compacting for utilities outside the building to utility main connections.

C. Filling holes, pits, and excavations generated as a result of removal (demolition) operations.

D. Filling and compacting for plazas and walkways.

1.02 RELATED REQUIREMENTS

A. Document _____-_____: Geotechnical report; bore hole locations and findings of subsurface materials.

B. Section 03 30 00 - Cast-in-Place Concrete.

C. Section 31 22 00 - Grading: Site grading.

D. Section 31 23 16 - Excavation: Removal and handling of soil to be re-used.

E. Section 32 14 23 - Asphalt Unit Paving: Leveling bed placement under pavers.

1.03 PRICE AND PAYMENT PROCEDURES

A. See Section 01 22 00 - Unit Prices, for general requirements applicable to unit prices for earthwork.

B. General Fill: Applies to Unit Price # 5.
   1. Measurement Method: By the square yard down to a drawing-defined elevation.
   2. Includes: Excavating existing soil, stockpiling, scarifying substrate surface, placing where required, and compacting.

C. Structural Fill: Applies to Unit Price # 6.
   1. Measurement Method: By the square yard down to a drawing-defined elevation.
   2. Includes: Excavating existing soil, stockpiling, scarifying substrate surface, placing where required, and compacting.

D. Granular Fill: Applies to Unit Price # 7.
   1. Measurement Method: By the square yard down to a drawing-defined elevation.
   2. Includes: Excavating existing material, stockpiling, scarifying substrate surface, placing where required, and compacting. E. Aggregates: Applies to Unit Price # 8.
   1. Measurement Method: By the square yard down to a drawing-defined elevation.
   2. Includes: Excavating existing material, stockpiling, scarifying substrate surface, placing where required, and compacting. F. Sand Fill: Applies to Unit Price # 9.
   1. Measurement Method: By the square yard down too a drawing defined elevation.
   2. Includes: Excavating existing material, stockpiling, scarifying substrate surface, placing where required, and compacting.

1.04 DEFINITIONS

A. Finish Grade Elevations: Indicated on drawings.

B. Subgrade Elevations: 4 inches below finish grade elevations indicated on drawings, unless otherwise indicated.

1.05 REFERENCE STANDARDS

A. AASHTO T 180 - Standard Specification for Moisture-Density Relations of Soils Using a 4.54 kg (10-lb) Rammer and a 457 mm (18 in.) Drop; American Association of State Highway and Transportation Officials; 2010

B. ASTM C136 - Standard Test Method for Sieve Analysis of Fine and Coarse Aggregates; 2006.

C. ASTM D698 - Standard Test Methods for Laboratory Compaction Characteristics of Soil Using Standard Effort (12,400 ft-lbf/ft3 (600 kN-m/m3)); 2012.

D. ASTM D1556 - Standard Test Method for Density and Unit Weight of Soil in Place by the Sand-Cone Method; 2007.

E. ASTM D1557 - Standard Test Methods for Laboratory Compaction Characteristics of Soil Using Modified Effort (56,000 ft-lbf/ft3 (2,700 kN m/m3)); 2012.

F. ASTM D2167 - Standard Test Method for Density and Unit Weight of Soil in Place by the Rubber Balloon Method; 2008.

G. ASTM D2487 - Standard Practice for Classification of Soils for Engineering Purposes (Unified Soil Classification System); 2011.

H. ASTM D2922 - Standard Test Methods for Density of Soil and Soil-Aggregate in Place by Nuclear Methods (Shallow Depth); 2005.

I. ASTM D3017 - Standard Test Method for Water Content of Soil and Rock in Place by Nuclear Methods (Shallow Depth); 2005.

1.06 SUBMITTALS

A. See Section 01 30 00 - Administrative Requirements, for submittal procedures.

B. Samples: 10 lb sample of each type of fill; submit in air-tight containers to testing laboratory.

C. Materials Sources: Submit name of imported materials source.

D. Fill Composition Test Reports: Results of laboratory tests on proposed and actual materials used.

E. Compaction Density Test Reports.

1.07 DELIVERY, STORAGE, AND HANDLING

A. When necessary, store materials on site in advance of need.

B. When fill materials need to be stored on site, locate stockpiles where indicated.
   1. Separate differing materials with dividers or stockpile separately to prevent intermixing.
   2. Prevent contamination.
   3. Protect stockpiles from erosion and deterioration of materials.

PART 2 PRODUCTS 2.01 FILL MATERIALS

A. General Fill - Fill Type # 5: Subsoil excavated on-site.
   1. Graded.
   2. Free of lumps larger than 3 inches, rocks larger than 2 inches, and debris.
   3. Conforming to ASTM D2487 Group Symbol CL.

B. Structural Fill - Fill Type # 6: Subsoil excavated on-site.
   1. Graded.
   2. Free of lumps larger than 3 inches, rocks larger than 2 inches, and debris.
   3. Conforming to ASTM D2487 Group Symbol CL.

C. Concrete for Fill: As specified in Section 03 30 00; compressive strength of 2500 psi.

D. Granular Fill - Gravel # 4 - Fill Type # 7: Pit run washed stone; free of shale, clay, friable material and debris.
   1. Graded in accordance with ASTM D2487 Group Symbol GW.
   2. Graded in accordance with ASTM C136, within the following limits:
      a. 2 inch sieve: 100 percent passing.
      b. 1 inch sieve: 95 percent passing.
      c. 3/4 inch sieve: 95 to 100 percent passing.
      d. 5/8 inch sieve: 75 to 100 percent passing.
      e. 3/8 inch sieve: 55 to 85 percent passing.
      f. No. 4 sieve: 35 to 60 percent passing.

g. No. 16 sieve: 15 to 35 percent passing.
h. No. 40: 10 to 25 percent passing.
i. No. 200: 5 to 10 percent passing.

E. Granular Fill - Pea Gravel, Regular - Fill Type # 8: Natural stone; washed, free of clay, shale, organic matter.
1. Grade in accordance with ASTM D2487 Group Symbol GM.
2. Graded in accordance with ASTM C136, within the following limits:
a. Minimum Size: 1/4 inch.
b. Maximum Size: 5/8 inch.

F. Sand - Fill Type # 9: Natural river or bank sand; washed; free of silt, clay, loam, friable or soluble materials, and organic matter.
1. Grade in accordance with ASTM D2487 Group Symbol SW.
2. Graded in accordance with ASTM C136; within the following limits:
a. No. 4 sieve: 100 percent passing.
b. No. 14 sieve: 10 to 100 percent passing.
c. No. 50 sieve: 5 to 90 percent passing.
d. No. 100 sieve: 4 to 30 percent passing.
e. No. 200 sieve: 0 percent passing. G. Topsoil: Topsoil excavated on-site.

1. Select.
2. Graded.
3. Free of roots, rocks larger than 1/2 inch, subsoil, debris, large weeds and foreign matter.
4. Acidity range (pH) of 5.5 to 7.5.
5. Containing a minimum of 4 percent and a maximum of 25 percent inorganic matter.
6. Conforming to ASTM D2487 Group Symbol OH.

2.02 ACCESSORIES

A. Geotextile Fabric: Non-biodegradable, woven, Mirafi; HP Series manufactured by Tencate Mirafi.

B. Vapor Retarder: 10 mil thick, polyethylene.

2.03 SOURCE QUALITY CONTROL

A. See Section 01 40 00 - Quality Requirements, for general requirements for testing and analysis of soil material.

B. Where fill materials are specified by reference to a specific standard, test and analyze samples for compliance before delivery to site.

C. If tests indicate materials do not meet specified requirements, change material and retest.

D. Provide materials of each type from same source throughout the Work.

PART 3 EXECUTION 3.01 EXAMINATION

A. Identify required lines, levels, contours, and datum locations.

B. Verify structural ability of unsupported walls to support imposed loads by the fill.

3.02 PREPARATION

A. Scarify subgrade surface to a depth of 6 inches to identify soft spots.

B. Cut out soft areas of subgrade not capable of compaction in place. Backfill with general fill.

C. Compact subgrade to density equal to or greater than requirements for subsequent fill material.

D. Until ready to fill, maintain excavations and prevent loose soil from falling into excavation.

3.03 FILLING

A. Fill to contours and elevations indicated using unfrozen materials.
B. Fill up to subgrade elevations unless otherwise indicated.

C. Employ a placement method that does not disturb or damage other work.

D. Systematically fill to allow maximum time for natural settlement. Do not fill over porous, wet, frozen or spongy subgrade surfaces.

E. Maintain optimum moisture content of fill materials to attain required compaction density.

F. Granular Fill: Place and compact materials in equal continuous layers not exceeding 6 inches compacted depth.

G. Soil Fill: Place and compact material in equal continuous layers not exceeding 8 inches compacted depth.

H. Slope grade away from building minimum 2 inches in 10 ft, unless noted otherwise. Make gradual grade changes. Blend slope into level areas. I. Correct areas that are over-excavated.

1. Load-bearing foundation surfaces: Use structural fill, flush to required elevation, compacted to 100 percent of maximum dry density.
2. Other areas: Use general fill, flush to required elevation, compacted to minimum 97 percent of maximum dry density.

J. Compaction Density Unless Otherwise Specified or Indicated:

1. Under paving, slabs-on-grade, and similar construction: 97 percent of maximum dry density.
2. At _____: 95 percent of maximum dry density.
3. At other locations: 95 percent of maximum dry density. K. Reshape and re-compact fills subjected to vehicular traffic.

3.04 FILL AT SPECIFIC LOCATIONS

A. Use general fill unless otherwise specified or indicated. B.

Under Interior Slabs-On-Grade:

1. Use granular fill.
2. Depth: 4 inches deep.
3. Compact to 95 percent of maximum dry density.
4. Cover with sand.
    a. Depth: 2 inches.
    b. Compact to 95 percent of maximum dry density. C. At Foundation Walls and Footings:

1. Use general fill.
2. Fill up to subgrade elevation.
3. Compact each lift to 90 percent of maximum dry density.
4. Do not backfill against unsupported foundation walls.

D. Over Buried Utility Piping, Conduits, and Duct Bank in Trenches:

1. Bedding: Use granular fill, pea gravel.
2. Cover with Fill Type # 8.
3. Fill up to subgrade elevation.
4. Compact in maximum 8 inch lifts to 95 percent of maximum dry density. E. Around and Over Underground Tanks:

1. Use initial fill of Fill Type # 8.
    a. 12 inches deep.
    b. Compact to 95 percent of maximum dry density.
2. Complete with general fill.
    a. Depth: Up to subgrade elevation.
    b. Compact to 95 percent of maximum dry density. F. At Lawn and Ground Cover Areas:

1. Use general fill.

2. Fill up to subgrade elevations.
3. Compact to 95 percent of maximum dry density.
4. See Drawing SWPPP-3 - Grading and Drainage Plan for topsoil placememt. G.

Under Pavers Set on Sand Leveling Bed:

1. Use granular fill.
2. Fill up to bottom of sand leveling bed.
3. Compact to 95 percent of maximum dry density.
4. See unit pavers section for leveling bed placement.

3.05 TOLERANCES

A. Top Surface of General Filling: Plus or minus 1 inch from required elevations.

B. Top Surface of Filling Under Paved Areas: Plus or minus 1 inch from required elevations.

3.06 FIELD QUALITY CONTROL

A. See Section 01 40 00 - Quality Requirements, for general requirements for field inspection and testing.

B. Perform compaction density testing on compacted fill in accordance with ASTM D1556, ASTM D2167, ASTM D2922, or ASTM D3017.

C. Evaluate results in relation to compaction curve determined by testing uncompacted material in accordance with ASTM D698 ("standard Proctor"), ASTM D1557 ("modified Proctor"), or AASHTO T 180.

D. If tests indicate work does not meet specified requirements, remove work, replace and retest.

E. Proof roll compacted fill at surfaces that will be under slabs-on-grade.

3.07 CLEANING

A. Leave unused materials in a neat, compact stockpile.

B. Remove unused stockpiled materials, leave area in a clean and neat condition. Grade stockpile area to prevent standing surface water.

C. Leave borrow areas in a clean and neat condition. Grade to prevent standing surface water.

END OF SECTION

SECTION 316329

CAISSONS

PART 1 - GENERAL

1.1 GENERAL

Work of this Section shall conform to requirements of Drawings and general provisions of the Contract, including General and Supplementary Conditions and Division 1 Specification sections.

1.2 SCOPE

The work covered by this Section shall include all labor, material, equipment, permits, engineering and other services necessary for the fabrication and installation of caissons and related work, complete, in accordance with the Drawings and as specified herein.

1.3 RELATED WORK SPECIFIED IN OTHER SECTIONS

Submittals	Division 1 Quality Control
	Division 1
Concrete	Section 033000
Concrete Reinforcement and Embedded Assemblies	Section 032000
Structural Steel	Section 051200
Thermal and Moisture Protection	Division 7
Substitutions	Division 1

See Drawings for locations, sizes, top elevations, and details. See Geotechnical Report for general soil conditions.

1.4 CODES AND STANDARDS

A. Building Code: Caisson work shall conform to the requirements of the Building Code identified on the structural General Notes, and OSHA requirements, except where more stringent conditions or criteria occur in the standards referenced below and on the Drawings.

B. Standards:

1. ACI 117 – Standard Specifications for Tolerances for Concrete Construction and Materials.
2. ACI 301 – Standard Specifications for Structural Concrete.
3. ACI 315 – Details and Detailing of Concrete Reinforcement.
4. ACI 318 – Building Code Requirements for Reinforced Concrete.
5. ACI 336.1 – Specification for the Construction of Drilled Piers.
6. American Concrete Institute “Manual of Concrete Practice”, various committee reports as referenced herein.
7. American Society for Testing and Materials "ASTM Standards in Building Codes", various standards as referenced herein.
8. AWS D1.4 – Structural Welding Code-Reinforcing Steel.

C. Definitions:

1. See Section 033000.
2. The term Geotechnical Engineer in this Specification is defined as the Owner's representative specifically authorized to perform the responsibilities defined herein.

1.5 CONTRACTOR QUALIFICATIONS

A. The Caisson Installer shall be a company which specializes in installing caissons, with a minimum of 10 years of documented successful experience. Installation shall be performed by skilled workmen thoroughly experienced in the necessary execution.

B. The Contractor's Field Supervisor shall have 10 years experience in installing caissons and provide full-time supervision.

C. The Contractor's Professional Surveyor shall have 5 years of previous experience in laying out foundation locations to perform surveys, layouts, and measurements for caisson work. Conduct layout work for each caisson to lines and levels required before excavation, and actual measurements of each caisson's horizontal axial location, shaft diameter, bottom and top elevations, deviations from specified tolerances, and other required data.

D. The Contractor's Geotechnical Engineer shall be qualified to perform the type of work required by the project. The Engineer(s) shall be a Licensed **Professional** Engineer in the state where the project is located. The engineer(s) shall develop a site dewatering plan and advise on caisson construction techniques, including assistance in the development of construction procedures and the development of solutions to construction problems.

E. The Contractor's Material Testing Agency shall be qualified to perform the type of work required by the project. Develop concrete mix designs, conduct trial batches, perform trial-batch tests, and submit the reports for approval.

F. The Owner's Geotechnical Engineer shall review Contractor submittals and will provide comments. Owner's Geotechnical Engineer will evaluate bearing strata, observe work, perform non-destructive shaft testing, and report findings in a timely manner.

G. Owner's Testing Agency: Required as specified in Division 1, and herein.

1.6 SUBMITTALS

A. Required Submittals - Where the SUBMITTALS section of this Specification is in conflict with Division 1 Submittals, the more stringent requirements for the Contractor apply. Required submittal items are listed here; see below for detailed requirements. Do not submit items not requested.

(1) Submittal Schedule
(2) Caisson Construction Methods
(3) Installer Qualifications

(4) Shop drawings
(5) Contractor's Geotechnical Reports
(6) Contractor's Material Testing Reports
(7) Construction Log
(8) Contractor's Survey Report
(9) Submittals required by Related Documents
(10) Mill Certificates
(11) Owner's Geotechnical Engineer Report
(12) Owner's Concrete Testing Agency Reports
(13) Product Data
(14) LEED Submittals

1. **Submittal Schedule: See Section 033000.**
2. **Caisson Construction Methods: Submit for record, caisson construction procedures developed by the Caisson Contractor. Provide caissons with no concrete discontinuity and no void measuring more than 1 inch in any direction.**
3. **Installer Qualifications: Submit proof of qualifications as stated in Section 1.5 of this Specification.**
4. **Shop drawings in accordance with 032000 and 033000, and as noted.**

   a) Concrete mix designs in accordance with Section 033000.
   b) Caisson reinforcement in accordance with Section 032000 and 033000. Submittal shall also indicate spacer and/or centralizers.
   c) Caisson layout drawing showing the location of each caisson (with respect to building gridlines), diameter of shaft and bell, and top of shaft elevation.
   d) Permanent steel liners, where required. For the design of corrugated steel liners, the Engineer(s) shall be a Licensed Professional Engineer(s) in the state where the project is located. Submit for record calculations signed and sealed by Design Professional.

5. **Contractor's Geotechnical Reports**: Submit for record reports signed and sealed by a licensed Professional Engineer(s) in state where the project is located, addressing any additional geotechnical investigation required by the Contractor, describing the planned caisson construction methods, discussing potential problems, and outlining planned methods of addressing potential problems.
6. **Contractor's Material Testing Reports: Submit for** record reports signed and sealed by a Professional Engineer in state where the project is located addressing proposed concrete mix design, trial batching test results, reports of ASTM C88.
7. **Construction Log: Owner's Testing Agency shall document, sign, and submit for record, a record of each caisson construction, including:**

   a) Caisson designation, top and bottom elevation, bell and shaft diameter.
   b) Size, length and location of permanent liner and casing.

c) Size, length, and location of installed reinforcement.
d) Deviation of centerline from vertical (tilt) measured after excavation.
e) Levelness of as-built caisson end bearing surface.
f) Actual allowable soil bearing capacity
g) Seepage of water
h) Inspection and testing
i) Method of concrete placement, time of beginning and ending concrete discharge for each truck, (including any delays in concreting and location of construction joints in shafts) and any deviation from planned construction methods.
j) Volume of concrete supplied to caisson and ratio of actual volume to theoretical volume.

8. **Contractor's Survey Report: Submit for record plans signed and sealed by a professional surveyor licensed in the state where the project is located, indicating as built plan locations of caisson centerlines (with respect to building gridlines) and identifying deviations of caisson centerlines at cutoff level from design plan locations. Caissons that are outside of specified tolerances shall be specifically identified on the plan.**
9. **Submittals required by Related Documents.**
10. **Mill Certificates: Per Specification section 032000, submit for record certified reports for physical and chemical properties of following materials:**

    a) Reinforcement bars.
    b) Permanent steel liners.

11. **Owner's Geotechnical Engineer Report**: submit for record

    a) Comments on the Contractor's Geotechnical Engineer's submittals.
    b) Comments on the Contractor's construction log, based on notes taken during caisson construction.
    c) Any deviations from the Drawings shall be immediately brought to the attention of the Design Professionals.

12. **Owner's Concrete Testing Agency Reports: submit for record**

    a) Reports of field observations.
    b) Reports of field quality control tests, as related to concrete, reinforcement, and permanent liner fabrication and welding.
    c) Any deviations from the Drawings shall be immediately brought to the attention of the Design Professionals.

13. **Product Data: Submit for record for each type of product identified in Part 2. Product Data shall be clearly marked to indicate all technical information which specifies full compliance with this section and Contract Documents, including published installation instructions and ICC reports, where applicable, for products of each manufacturer specified in this section.**

14.

B. Submittal Process: See Division 1

C. SER Submittal Review: See Division 1

D. Substitution Request: See Division 1

E. Request for Information (RFI): See Division 1

1.7 DELIVERY, STORAGE AND HANDLING

In accordance with Section 032000 and 033000.

1.8 PRE-INSTALLATION CONFERENCE

Conduct meeting at Project Site to comply with requirements in Division 1.

1.9 PROJECT SITE CONDITIONS

A. Geotechnical Information: Contractor to examine site, records of test borings, soil samples, and Geotechnical Reports that are available from the Owner. Soil boring test results are provided by the Owner for information, and are not guaranteed to represent conditions that are present at caisson locations. Soil boring test results are not intended as representations or warranties of the continuity of the reported conditions. It is expressly understood that the Owner will not be responsible for interpretation or conclusions drawn by Contractor from the Geotechnical Report. At no additional cost to the Owner, evaluate the available data and provide additional test borings and other investigations as necessary for installing caissons.

B. Site Survey: Survey of site, existing utilities, and existing construction available from the Owner represent conditions known to Owner. Other obstructions may be encountered.

1.10 QUALITY CONTROL BY CONTRACTOR

A. See Section 033000.

1.11 QUALITY ASSURANCE BY OWNER'S TESTING AGENCY

A. Source Quality Control

1. See Section 033000.

B. FIELD QUALITY ASSURANCE

1. See 033000 for general requirements.
2. Contractor's Responsibilities

a) Examine the areas and conditions under which caissons are to be installed. Notify the General Contractor in writing of conditions detrimental to the proper and timely completion of the work. Do

not proceed with the work until unsatisfactory conditions have been corrected in an acceptable manner.

b) Furnish complete sets of approved shop drawings and other submittals to Owner's and Contractor's Testing Agencies and Geotechnical Engineers.

c) Furnish notifications to Owner's and Contractor's Testing Agencies and Geotechnical Engineers, with at least 24 hour advance notice of start of drilling each caisson.

d) Provide access for Owner's and Contractor's Testing Agencies and Geotechnical Engineers. Provide concrete materials for sampling and testing.

e) Furnish storage facilities for material samples, in accordance with ACI Standard Practice.

f) Provide additional inspection and testing resulting as a consequence of following:

i. Lack of adequate evidence that work is in compliance with this Specification
ii. Work performed with improper supervision
iii. Work performed without prior notice
iv. Work performed contrary to Drawings and Specifications.

3. Owner's Geotechnical Engineer: Perform tests and inspections, as specified herein, evaluate test results, and review compliance of installed work with Contract Documents and prepare and submit reports.

a) Review Contractor's proposed caisson installation methods, sequences, procedures and equipment.

b) Verify bearing stratum and bearing capacity of each caisson; verify levelness of caisson end bearing surface.

c) Determine final bearing elevation at each caisson location; where design elevation does not provide specified minimum bearing capacity, recommend to Contractor that additional shaft excavation will be required to reach stratum with specified bearing capacity.

d) Visually inspect and test samples of water being pumped from caisson to determine solids content.

e) Observe, record, and report Contractor's in plan location and plumb tolerance measurements, shaft diameter, bell size and final elevations of bottom and top of completed caissons.

f) On a full-time basis, visually inspect installation of each caisson including excavation of bell and shaft, verification of bearing stratum, extent of cleanup, placement of concrete, and removal of temporary casings. Evaluate and note any actions that may cause soil inclusion in caisson or may affect integrity of the completed caisson.

g) Observe temporary steel liner installation and check for shaft squeeze in the soft clay layers.

h) Coordinate with Owner's Testing Agency.

4. Owner's Testing Agency: Conduct following tests and inspections during construction and prepare and submit reports.

   a) Inspection of Batch Plant: As required to ensure that concrete delivered to job complies with Specifications and design mix. Batch plant inspection shall be required once at start of job and thereafter if concrete falls below Specifications.
   b) Visually inspect fabrication of permanent steel plate casings and corrugated steel liners. Verify welder AWS certifications, and perform ultrasonic testing, per AWS D1.1, of 100% of welds only for permanent steel plate casings that are indicated on the drawings as contributing to the design capacity of the caisson.
   c) Inspection of Reinforcement: Provide continuous visual inspection of site fabrication. Record the steel reinforcement cage bar sizes, grade, length, and number of bars and tie spacing, prior to placement into the shaft. Record use of spacers and/or centralizers.
   d) Inspection of Concrete and Reinforcement Placement: Provide continuous visual inspection of installation of reinforcement and concrete placement including verification of laitance removal at top of caissons and at construction joints.
   e) Check ready mix delivery tickets for correct concrete mix design number. Record batch to placement time. Check slump, temperature, and batch to placement time for each set
   f) Slump Tests: ASTM C143. Make 1 test from each truck.
   g) Concrete Compressive Strength Tests: Testing agency will take a minimum of one sample set of concrete cylinders per caisson but no more than one set per truckload. See Section 033000 for requirements. Cure cylinders to simulate same curing conditions as concrete in caissons. Reports of cylinder tests shall state caisson location(s), laboratory or site curing, compression strength, type of fracture, age at testing, concrete supplier, mix specification strength, any other pertinent information, test results, and conclusions.
   h) Additional Tests: Perform additional testing if, in the opinion of the Design Professionals, concrete of poor quality has been placed based on cylinder strengths below Specification requirements or visual defects. Tests may be compression tests on cored cylinders, ASTM C42, and load tests as outlined in ACI 318, or as directed by the Design Professionals. Complete continuous coring of caissons will be required, at Contractor's expense, where verification of quality of concrete is not otherwise attainable.

1.12 OBSERVATIONS AND CORRECTIONS BY DESIGN PROFESSIONALS

See Section 033000.

1.13 PERMITS AND WARRANTY

A. Permits: Drawings and calculations prepared by the Contractor’s licensed structural engineer for temporary shoring and/or earth retention shall be

submitted to the City of Chicago Office of Underground Coordination (OUC) for review.

B. Warranty: Comply with General Conditions, agreeing to repair or replace specified materials or Work that has failed within the warranty period.

PART 2 - PRODUCTS

2.1 PERMANENT CORRUGATED STEEL LINER

ASTM A929, sheet steel, zinc coated. Design corrugated steel liners to withstand handling stresses, construction loads, and pressures induced by hydrostatic head, concrete placement, soil, and other forces, as applicable, including appropriate safety factors. Provide manufacturer's standard finish. Limit out of roundness to 2% of diameter. Design for the indicated tolerances.

2.2 TEMPORARY STEEL CASING

A. ASTM A283, Grade C; or ASTM A36, all vertical joints provided with full penetration welds, per AWS D1.1. Temporary casings shall be provided to prevent cave-ins and displacement of earth, and for keeping silt and water out of the caisson excavation. This casing shall extend from the height of 1’-0” (one foot) above grade, through the miscellaneous fill, into the strata of clay. Where necessary, the inside diameter of the casing shall be large enough to permit installation of a permanent corrugated liner inside of the temporary casing.

B. Design casing to withstand handling stresses, construction loads, and pressures induced by hydrostatic head, concrete placement, soil, and other forces as applicable, including appropriate safety factors. Limit out of roundness to 2% of diameter. Design for the indicated tolerances.

2.3 CONCRETE

A. See Section 033000 and additional requirements listed below.

B. Retarder: Sufficient to prevent temporary set for a period of 4 hours from completion of batching.

C. Concrete Placed by Tremie Method: Include coarse aggregates with maximum size conforming to Size 7 per ASTM C33 and a water/cement ratio less than or equal to 0.45. For concrete placed in a dry open hole, provide slump of 5" to 7". For concrete placed by tremie method, provide slump of 7" to 9".

D. Controlled Slurry: stable colloidal suspension of various pulverized clays or polymers thoroughly mixed with water and in compliance with ACI 336.1.

2.4 REINFORCEMENT

See Section 032000.

2.5 LEAN GROUT

A. Provide sand-cement grout suitable to fill annular void outside permanent or temporary casing.

1. Minimum cube strength at 28 days, as stated in typical details.
2. Water-cementitious materials ratio of less than 1.0.

PART 3 - EXECUTION

3.1 PROTECTION OF EXISTING UTILITIES AND STRUCTURES

A. Before installing caissons adjacent to known existing utilities, notify utility owner to ensure that protective work will be coordinated and performed by Contractor in accordance with requirements of the owner of utility or building. If any existing service lines, utilities, and utility structures to remain in service are uncovered or encountered during work, protect the uncovered element from damage and provide support where necessary.

B. Should uncharted or incorrectly charted piping or other utilities be encountered during caisson drilling operations, immediately notify Owner, Design Professionals and utility owner. Cooperate with Owner and utility owner in keeping their respective services, utilities and facilities in operation. Repair damaged utilities to entire satisfaction of Owner and utility owner concerned.

C. Do not interrupt existing utility service facilities occupied and used by Owner and others, except when permitted in writing by the Design Professionals and then only after acceptable temporary utility services have been provided.

D. Protect structures, sidewalks, pavements, and other facilities from damage caused by settlement, lateral movement, vibration, and other hazards created by caisson operations.

3.2 SITE DEWATERING

A. Before installing caissons, provide site dewatering based on the Contractor’s site dewatering plan. .

B. Provide and maintain pumping equipment to keep excavations free of water before placing concrete. If excessive water is encountered and drilling operations must be halted, consult the Geotechnical Engineer before using alternate methods of construction.

C. If excessive seepage is coming in from below the bottom of the caisson excavation, removal by pumping is inappropriate, as this may loosen the bearing soils and reduce the bearing soil capacity; therefore, an alternate means of construction will be required.

3.3 GENERAL CAISSON EXCAVATION

A. Tolerances: Plan location tolerance at cut-off shall be no greater than 1/24 of the specified shaft diameter or 3 inches (75 mm), whichever is greater, from shaft

centerline location indicated on Structural Drawings. Provide caisson centerline with a local slope of no more than 1/8 in. per foot at any point, and an overall slope of no more than 1/8 in. per foot. If indicated tolerances are exceeded, see “Belled Caisson Corrective Measures” in Part 3.

B. Concrete cut-off elevation: plus 1 inch, minus 3 inches.

C. Cleanup of Caisson Bottom: Excavate bottom to a level plane. Remove loose materials or free water as determined by Owner's Geotechnical Engineer. Per the Geotechnical Report, it is necessary to oversize the bell area by 15 percent or the bell diameter by 1 foot, whichever is smaller. Oversizing of the bell diameter is indicated on the Drawings. Alternately, to eliminate oversized bell requirements, a camera can be lowered into the bell after final cleanup to verify that the bell is suitably free of loose materials. This may be used at Contractor’s option.

D. Equipment: Use equipment of adequate capacity and proven methods.

E. Install permanent corrugated steel liners inside of temporary casings to form the caisson shaft before the concrete pour. Remove and replace, or repair liners, which are damaged during installation and which could impair the strength or efficiency of the completed caisson.

F. All excavation required to install the temporary casing through any water bearing soils shall be performed under a slurry head sufficient to prevent caving. All excavation shall be supported by the slurry until the temporary casing has been installed with a minimum seal into the clay strata as required per the Geotechnical Report. The casing shall be pushed or twisted to a depth sufficient to prevent soft clay squeeze.

G. Loss of Soils: Minimize loss of soils due to pumping. Minimize squeezing of excavation. Limit loss of ground and subsequent settlement to least possible amount by limiting annular spaces beyond permanent liners to specified values, performing excavation under slurry if needed, grouting annular spaces beyond permanent liners, and limiting soil quantity pumped out.

H. Excavate holes for caissons to the required bearing strata as determined by the Owner’s Geotechnical Engineer. Excavate holes for closely spaced caissons, and those occurring in fragile or sand strata, only after adjacent holes are filled with concrete and allowed to set.

I. Holes for caissons at or near underground utilities shall be hand dug where required to protect the utilities when within 1’-0” of utilities elevation.

3.4 ADDITIONAL EXCAVATION AND CAISSON LENGTH

A. Do not excavate below elevations noted by Owner's Geotechnical Engineer without prior review by Owner's Geotechnical Engineer. No payment will be made for extra length when caisson shafts are excavated to a greater depth than indicated on Drawings, due to over-drilling by Contractor. In the event of an over-excavated shaft, complete caisson and fill extra depth with concrete, if other

conditions are satisfactory. Over-excavated shafts will be measured and paid for to original design or authorized depth.

B. Where Owner's Geotechnical Engineer determines that soil encountered at design bearing elevation is not capable of providing minimum design bearing capacity, perform additional excavation as recommended by Owner's Geotechnical Engineer.

C. If obstructions are encountered that interfere with new construction, remove such existing elements or develop corrective methods. The Contractor shall propose corrective actions and their recommendations in writing and submit them for review by the Design Professionals. Efforts shall be made to address obstructions at no additional cost to the Owner.

3.5 DISPOSAL OF EXCAVATED MATERIALS

Dispose excavated materials off site in a manner that will not interfere with other construction activities. Keep construction site at all times clean and free of soil and other debris that could affect progress of other construction activities.

3.6 CAISSON REINFORCEMENT

A. Fabrication in accordance with 032000 from approved shop drawings.

B. Fabricate and install reinforcement cage symmetrically about axis of shaft in a single unit. Cages shall be properly and securely fabricated to maintain their design locations and configurations without permanent distortion after lifted and placed in hole for caisson.

C. Use spacers and/or centralizers as required to:

1. Attain and maintain minimum cover to reinforcement, and
2. Accurately position, support and secure reinforcement against displacement during concreting.

3.7 CAISSON BEARING STRATA

A. Belled Caisson Bearing Stratum Criteria and Verification

1. Belled caissons shall be founded on soil strata with bearing capacity indicated on Drawings. Caisson bells shall not be excavated until test results by Owner’s Geotechnical Engineer confirm allowable bearing values indicated on Drawings, but shall be excavated immediately thereafter. In no case shall bottom of belled caisson be excavated to a depth that may produce a bottom blowout due to high underlying hydrostatic pressure. If test results indicate that soil is incapable of providing required safe-bearing values, advance shaft length as recommended by Owner's Geotechnical Engineer or enlarge bells as recommended by Owner's Geotechnical Engineer and SER.
2. Each caisson bearing strata must be inspected and be acceptable to the Owner’s Geotechnical Engineer before placing concrete.

3.8 PLACING CONCRETE IN DRY HOLE

A. Place concrete in dry hole unless specifically reviewed by Owner's Geotechnical Engineer.

B. Place concrete only after all of the following has occurred:

1. Caisson excavation is complete and reinforcement cage has been placed and secured.
2. Caisson bottom is cleaned.
3. Inspections by Owner's Geotechnical Engineer and Owner's Testing Agency are completed.

C. Place concrete in belled caisson within 8 hours of exposing bearing stratum. Place concrete only after receipt of verification of bearing stratum by Owner's Geotechnical Engineer.

D. Where concrete cannot be directed down shaft without striking shaft wall or reinforcement cage, place concrete with chutes, tremies, or pumps. Avoid contact between concrete placing equipment and shaft wall or reinforcement cage.

E. Place concrete immediately after mixing, and in no case more than 90 minutes after initial mixing. Do not allow concrete to hit caisson shaft wall or reinforcement cage during placement. Continue depositing concrete until completion of caisson to top of shaft. If placement of concrete is suspended for more than 60 minutes, install construction joint as proposed in advance by the Contractor and reviewed by the Design Professionals. Remove laitance and excess water from top of completed caisson.

F. Place concrete for belled caissons only after receiving approval from the Owner's Geotechnical Engineer, based on an evaluation of water inflow, where applicable.

3.9 PLACING CONCRETE UNDER SLURRY OR WATER USING TREMIE OR PUMP METHODS

A. Placement of concrete under slurry or water is allowed only based on review comments from Design Professionals and Owner's Geotechnical Engineer. Use "controlled" bentonite clay or polymer slurry, as reviewed by Owner's Geotechnical Engineer, with density not less than 64 pcf. Control quality and application of slurry material to preclude contamination of concrete. Placing concrete under water will be considered only in the presence of continuous steel plate casing, to protect against caving. Installation of casing may require drilling under slurry.

B. Allow water and slurry to rise to stable static level, as determined by Owner's Geotechnical Engineer.

C. Clean bottom of caisson with a high capacity air-lift, suction pump. De-sand slurry to less than 4% sand content. Assist Owner's Geotechnical Engineer in "sounding" bearing stratum with air lift pipe.

D. Place concrete in caisson within 8 hours of exposing bearing stratum. Place concrete only after verification of bearing stratum and securing of reinforcement cage has been completed.

E. Agitate slurry or water by an air hose at bottom of caisson, until concrete placement is started, to keep any remaining excavation material fines in suspension.

F. Provide continuous tremie pipe with a minimum diameter of 10 inches or continuous pumping pipe with a minimum diameter of 5 inches.

G. Provide separator plug suitable for keeping concrete separated from slurry or water in pipe. Lower pipe to bottom of caisson. Fill pipe with concrete to its top and release plug by lifting pipe 10 inches. Maintain concrete head above hydrostatic pressure.

H. Allow concrete to rise from bottom. Pipe shall always penetrate into concrete and pipe shall not be initially raised until a 30 foot depth of concrete is reached, after which it may be raised to maintain a minimum penetration of 10 feet into fresh concrete.

I. At option of Contractor, upon preconstruction request, review and approval, concrete placement may be suspended after a minimum of 30 feet of concrete is placed from bottom. Remainder of caisson may be placed in dry hole after cleaning and removal of laitance and installing a construction joint as detailed on Drawings. For this option of combining concrete placement methods, extend reinforcement to full length of caisson.

3.10 CORRECTIVE MEASURES

A. If unforeseen field conditions require corrective installation methods, notify Design Professionals immediately.

1. Where a change to the construction installation method result in an as-built caisson in compliance with the Contract Documents, submit installation method for record.
2. Where the as built caisson does not meet the design intent of the Contract Documents. The Contractor shall propose corrective actions and their recommendations in writing and submit them for review by the Design Professionals.

B. If concrete placement is suspended before completion of caisson or a construction joint is required for some other reason, indicate location on construction log. Submit a construction joint for approval and remove debris and laitance from joint before placing additional concrete.

C. If caissons are installed outside allowable tolerances, develop and provide corrective methods at no extra cost to the Owner including calculations based on actual locations of caissons, taking into account eccentricity between final centerline of caisson and design location of column centerline. The Contractor shall propose corrective actions and their recommendations in writing and submit them for review by the Design Professionals. Calculations shall be signed and

sealed by a Professional Engineer licensed in the state where the project is located.

D. Where the Contractor requests that the Design Professionals develop the corrective actions or review corrective actions developed by others, the Design Professional shall be compensated as outlined in Part 3 – CORRECTIVE MEASURES section of Specification 033000.

END OF SECTION

SECTION 32 11 23 - AGGREGATE BASE COURSES

PART 1 GENERAL 1.01 SECTION INCLUDES

A. Aggregate base course.

B. Paving aggregates.

1.02 RELATED REQUIREMENTS

A. Section 31 22 00 - Grading: Preparation of site for base course.

B. Section 31 23 16.13 - Trenching: Compacted fill over utility trenches under base course.

C. Section 31 23 23 - Fill: Topsoil fill at areas adjacent to aggregate base course.

D. Section 31 23 23 - Fill: Compacted fill under base course.

E. Section 32 12 16 - Asphalt Paving: Binder and finish asphalt courses.

F. Section 32 13 13 - Concrete Paving: Finish concrete surface course.

G. Section 32 14 23 - Asphalt Unit Paving.

1.03 PRICE AND PAYMENT PROCEDURES

A. See Section 01 22 00 - Unit Prices, for general requirements applicable to unit prices for earthwork.

B. Coarse Aggregate Type #7: By the cubic yard. Includes supplying aggregate material, stockpiling, scarifying substrate surface, placing, and compacting.

1.04 REFERENCE STANDARDS

A. AASHTO M 147 - Standard Specification for Materials for Aggregate and Soil-Aggregate Subbase, Base and Surface Courses; American Association of State Highway and Transportation Officials; 1965 (2004).

B. AASHTO T 180 - Standard Specification for Moisture-Density Relations of Soils Using a 4.54 kg (10-lb) Rammer and a 457 mm (18 in.) Drop; American Association of State Highway and Transportation Officials; 2010

C. ASTM C136 - Standard Test Method for Sieve Analysis of Fine and Coarse Aggregates; 2006.

D. ASTM D698 - Standard Test Methods for Laboratory Compaction Characteristics of Soil Using Standard Effort (12,400 ft-lbf/ft3 (600 kN-m/m3)); 2012.

E. ASTM D1556 - Standard Test Method for Density and Unit Weight of Soil in Place by the SandCone Method; 2007.

F. ASTM D1557 - Standard Test Methods for Laboratory Compaction Characteristics of Soil Using Modified Effort (56,000 ft-lbf/ft3 (2,700 kN m/m3)); 2012.

G. ASTM D2167 - Standard Test Method for Density and Unit Weight of Soil in Place by the Rubber Balloon Method; 2008.

H. ASTM D2487 - Standard Practice for Classification of Soils for Engineering Purposes (Unified Soil Classification System); 2011.

I. ASTM D3017 - Standard Test Method for Water Content of Soil and Rock in Place by Nuclear Methods (Shallow Depth); 2005.

J. ASTM D4318 - Standard Test Methods for Liquid Limit, Plastic Limit, and Plasticity Index of Soils; 2010.

K. ASTM D6938 - Standard Test Method for In-Place Density and Water Content of Soil and SoilAggregate by Nuclear Methods (Shallow Depth); 2010.

1.05 SUBMITTALS

A. See Section 01 30 00 - Administrative Requirements, for submittal procedures.

B. Samples: 10 lb sample of each type of aggregate; submit in air-tight containers to testing laboratory.

C. Materials Sources: Submit name of imported materials source.

D. Aggregate Composition Test Reports: Results of laboratory tests on proposed and actual materials used.

E. Compaction Density Test Reports.

1.06 DELIVERY, STORAGE, AND HANDLING

A. When necessary, store materials on site in advance of need.

B. When aggregate materials need to be stored on site, locate where indicated on drawings.

C. When aggregate materials need to be stored on site, locate where directed by Owner. D.

Aggregate Storage, General:

1. Separate differing materials with dividers or stockpile separately to prevent intermixing.
2. Prevent contamination.
3. Protect stockpiles from erosion and deterioration of materials.

PART 2 PRODUCTS 2.01 MATERIALS

A. Coarse Aggregate Type ASTM C294: Coarse aggregate, conforming to State of New York Highway Department standard.

B. Coarse Aggregate Type # 7: Pit run washed stone; free of shale, clay, friable material and debris.
   1. Graded in accordance with ASTM D2487 Group Symbol GW.
   2. Graded in accordance with ASTM C136, within the following limits:
      a. 2 inch sieve: 100 percent passing.
      b. 1 inch sieve: 95 percent passing.
      c. 3/4 inch sieve: 95 to 100 percent passing.
      d. 5/8 inch sieve: 75 to 100 percent passing.
      e. 3/8 inch sieve: 55 to 85 percent passing.
      f. No. 4 sieve: 35 to 60 percent passing.
      g. No. 16 sieve: 15 to 35 percent passing.
      h. No. 40: 10 to 25 percent passing.
      i. No. 200: 5 to 10 percent passing.

C. Blended Aggregate Type PCC: AASHTO Ml47, Grade 3; passing the No. 1/2 sieve with a liquid limit of not more than 25; a plasticity index of not more than 5 in accordance with ASTM D4318. D. Medium Aggregate Type # 8: Natural stone, pea gravel; washed, free of clay, shale, organic matter.
   1. Grade in accordance with ASTM D2487 Group Symbol GM.
   2. Graded in accordance with ASTM C136, within the following limits:
      a. Minimum Size: 1/4 inch.
      b. Maximum Size: 5/8 inch.

E. Fine Aggregate Type # 9: Sand; conforming to State of New York Highway Department standard.

F. Fine Aggregate Type # 9: Natural river or bank sand; washed; free of silt, clay, loam, friable or soluble materials, and organic matter.

1. Grade in accordance with ASTM D2487 Group Symbol SW.
2. Graded in accordance with ASTM C136; within the following limits:
   a. No. 4 sieve: 100 percent passing.
   b. No. 14 sieve: 10 to 100 percent passing.
   c. No. 50 sieve: 5 to 90 percent passing.
   d. No. 100 sieve: 4 to 30 percent passing.
   e. No. 200 sieve: 0 percent passing.

G. Geotextile Fabric: Non-biodegradable, woven, Mirafi; HP Series manufactured by Tencate.

2.02 SOURCE QUALITY CONTROL

A. See Section 01 40 00 - Quality Requirements, for general requirements for testing and analysis of aggregate materials.

B. Where aggregate materials are specified using ASTM D2487 classification, testing of samples for compliance will be provided before delivery to site.

C. If tests indicate materials do not meet specified requirements, change material and retest.

D. Provide materials of each type from same source throughout the Work.

PART 3 EXECUTION 3.01 EXAMINATION

A. Verify that survey bench marks and intended elevations for the work are as indicated.

B. Verify substrate has been inspected, gradients and elevations are correct, and is dry.

3.02 PREPARATION

A. Correct irregularities in substrate gradient and elevation by scarifying, reshaping, and recompacting.

B. Do not place aggregate on soft, muddy, or frozen surfaces.

3.03 INSTALLATION

A. Spread aggregate over prepared substrate to a total compacted thickness of 4 inches. B.

Under Bituminous Concrete Paving:

1. Place coarse aggregate to a total compacted thickness of 4 inches.
2. Compact to 95 percent of maximum dry density.

C. Place aggregate in maximum 4 inch layers and roller compact to specified density.

D. Level and contour surfaces to elevations and gradients indicated.

E. Add small quantities of fine aggregate to coarse aggregate as appropriate to assist compaction.

F. Add water to assist compaction. If excess water is apparent, remove aggregate and aerate to reduce moisture content.

G. Use mechanical tamping equipment in areas inaccessible to compaction equipment. **3.04**

TOLERANCES

A. Flatness: Maximum variation of 1/4 inch measured with 10 foot straight edge.

B. Scheduled Compacted Thickness: Within 1/4 inch.

C. Variation From Design Elevation: Within 1/2 inch.

3.05 FIELD QUALITY CONTROL

A. See Section 01 40 00 - Quality Requirements, for general requirements for field inspection and testing.

B. Compaction density testing will be performed on compacted aggregate base course in accordance with ASTM D1556.

C. Results will be evaluated in relation to compaction curve determined by testing uncompacted material in accordance with ASTM D698 ("standard Proctor").

D. If tests indicate work does not meet specified requirements, remove work, replace and retest.

E. Proof roll compacted aggregate at surfaces that will be under slabs-on-grade. **3.06 CLEANING**

A. Leave unused materials in a neat, compact stockpile.

B. Remove unused stockpiled materials, leave area in a clean and neat condition. Grade stockpile area to prevent standing surface water.

C. Leave borrow areas in a clean and neat condition. Grade to prevent standing surface water.

END OF SECTION

SECTION 32 14 23 - ASPHALT UNIT PAVING

PART 1 GENERAL 1.01 SECTION INCLUDES

A. Asphaltic block pavers and adhesive.

1.02 RELATED REQUIREMENTS

A. Section 32 11 23 - Aggregate Base Courses: Stabilized base.

1.03 SUBMITTALS

A. See Section 01 30 00 - Administrative Requirements, for submittal procedures.

B. Product Data: Provide characteristics of paver unit, dimensions, special shapes, and adhesive. C. Samples: Submit two samples of each paver size, illustrating style, size, color range, and surface texture of units being provided.

D. Manufacturer's Installation Instructions: Indicate substrate requirements, installation methods. E. Maintenance Data: Provide data for Owner continuing maintenance of the paver surface, replacement of paver units, and surface wax maintenance requirements.

F. Maintenance Materials: Provide the following for Owner's use in maintenance of project.

1. See Section 01 60 00 - Product Requirements, for additional provisions.
2. Extra Pavers: 10 of each type and size.

PART 2 PRODUCTS 2.01 MANUFACTURERS

A. Asphalt Pavers:

1. Hanover Architectural Products, Inc; Product Match existing size, pattern, color and texture: www.hanoverpavers.com.
2. Substitutions: See Section 01 60 00 - Product Requirements.

2.02 MATERIALS

A. Pavers: Fibrous asphaltic block; 8 x 8 inch size, 2 inch thick; natural finish of selected color.

B. Adhesive: Neoprene modified asphaltic type, recommended by paver manufacturer.

C. Joint Filler: Portland cement and clean sand.

PART 3 EXECUTION 3.01 EXAMINATION

A. Verify that substrate is level, smooth, capable of supporting pavers and imposed loads, and ready to receive work of this section.

B. Verify gradients and elevations of substrate are correct.

3.02 PREPARATION

A. Apply primer to surface of substrate in accordance with manufacturer's instructions. **3.03**

INSTALLATION

A. Apply adhesive and pavers in accordance with manufacturer's instructions.

B. Place paver units in hexagonal pattern, from straight reference edge.

C. Machine roll units to level surface.

D. Sweep a dry mixture of one part Portland cement and three parts sand into paver joints.

E. Fog spray surfaces with water to ensure wetting of joint filler.

F. Sweep excess filler from surface of pavers. **END OF SECTION**

SECTION 32 93 00 - PLANTS

PART 1 - GENERAL

1.1 SUMMARY

A. Section Includes:

1. Engineered Planting Medium

2. Transplanted Plants.

B. Related Work

1. Section 02 41 00 Selective Demolition

2. Section 01 53 90 – Temporary Tree Protection

1.2 SUBMITTALS

A. Product Data: For each type of product indicated, including soils.

B. Plants: Provide photographic documentation of quality, size, genus, species, and variety of plants indicated, complying with applicable requirements in ANSI Z60.1 before Landscape Architect selection.

C. Schedule for Maintenance Under Warranty: Provide detailed 12-month schedule of bi-weekly maintenance under warranty.

1.3 QUALITY ASSURANCE

A. Installer's Field Supervision: Require Installer to maintain an experienced full-time supervisor on Project site when work is in progress.

1. Pesticide Specialist: State licensed, commercial. B.

Plants: Harvested in-situ Liriope muscari varieties.

1.4 DELIVERY, STORAGE, AND HANDLING

A. Store plants after harvesting in a cool location, out of direct sunlight. Provide adequate irrigation to maintain health and vigor. Protect from weather and mechanical damage, and keep roots moist.

1.5 MAINTENANCE SERVICE

A. Initial Maintenance Service: Provide initial maintenance immediately after plants are harvested, and continue after replanting until plantings are acceptably healthy and well established but for not less than maintenance period below.

B. Maintenance under Warranty: Start full maintenance at Substantial Completion and continue until plantings are acceptably healthy and well established but for not less than maintenance period below.

1. Maintenance Period for Transplanted Plants: 12 months from date of Substantial Completion.

PART 2 - PRODUCTS

2.1 INORGANIC SOIL AMENDMENTS

A. Lime: ASTM C 602, agricultural liming material containing a minimum of 80 percent calcium carbonate equivalent and as follows:

1. Class: T, with a minimum of 99 percent passing through No. 8 (2.36-mm) sieve and a minimum of 75 percent passing through No. 60 (0.25-mm) sieve.
2. Class: O, with a minimum of 95 percent passing through No. 8 (2.36-mm) sieve and a minimum of 55 percent passing through No. 60 (0.25-mm) sieve.

B. Sulfur: Granular, biodegradable, and containing a minimum of 90 percent sulfur, with a minimum of 99 percent passing through No. 6 (3.35-mm) sieve and a maximum of 10 percent passing through No. 40 (0.425-mm) sieve.

C. Iron Sulfate: Granulated ferrous sulfate containing a minimum of 20 percent iron and 10 percent sulfur.

D. Aluminum Sulfate: Commercial grade, unadulterated.

E. Perlite: Horticultural perlite, soil amendment grade.

F. Agricultural Gypsum: Minimum 90 percent calcium sulfate, finely ground with 90 percent passing through No. 50 (0.30-mm) sieve.

G. Sand: Clean, washed, natural or manufactured, and free of toxic materials.

H. Diatomaceous Earth: Calcined, 90 percent silica, with approximately 140 percent water absorption capacity by weight.

I. Zeolites: Mineral clinoptilolite with at least 60 percent water absorption by weight.

2.2 ORGANIC SOIL AMENDMENTS

A. Compost: Well-composted, stable, and weed-free organic matter, pH range of 5.5 to 8; moisture content 35 to 55 percent by weight; 100 percent passing through 1-inch (25-mm) 3/4inch (19-mm) 1/2-inch (13-mm) sieve; soluble salt content of 5 to 10 decisiemens/m; not exceeding 0.5 percent inert contaminants and free of substances toxic to plantings; and as follows:

B. Sphagnum Peat: Partially decomposed sphagnum peat moss, finely divided or granular texture, with a pH range of 3.4 to 4.8.

C. Muck Peat: Partially decomposed moss peat, native peat, or reed-sedge peat, finely divided or of granular texture, with a pH range of 6 to 7.5, and having a water-absorbing capacity of 1100 to 2000 percent.

D. Wood Derivatives: Decomposed, nitrogen-treated sawdust, ground bark, or wood waste; of uniform texture and free of chips, stones, sticks, soil, or toxic materials.

E. Manure: Well-rotted, unleached, stable or cattle manure containing not more than 25 percent by volume of straw, sawdust, or other bedding materials; free of toxic substances, stones, sticks, soil, weed seed, debris, and material harmful to plant growth.

2.3 FERTILIZERS

A. Bonemeal: Commercial, raw or steamed, finely ground; a minimum of 14 percent nitrogen and 10 20 percent phosphoric acid.

B. Superphosphate: Commercial, phosphate mixture, soluble; a minimum of 20 percent available phosphoric acid.

C. Commercial Fertilizer: Commercial-grade complete fertilizer of neutral character, consisting of fast- and slow-release nitrogen, 50 percent derived from natural organic sources of urea formaldehyde, phosphorous, and potassium in the following composition:

1. Composition: 1 lb/1000 sq. ft. (0.45 kg/92.9 sq. m) of actual nitrogen, 4 percent phosphorous, and 2 percent potassium, by weight.

D. Slow-Release Fertilizer: Granular or pelleted fertilizer consisting of 50 percent water-insoluble nitrogen, phosphorus, and potassium in the following composition:

1. Composition: 20 percent nitrogen, 10 percent phosphorous, and 10 percent potassium, by weight.

E. Planting Tablets: Tablet-form myccorhizal inoculant. Tightly compressed chip type, long-lasting, slow-release, commercial-grade planting fertilizer in tablet form. Tablets shall break down with soil bacteria, converting nutrients into a form that can be absorbed by plant roots.

1. Size: 5-gram 10-gram 21-gram Insert size tablets.
2. Nutrient Composition: 20 percent nitrogen, 10 percent phosphorous, and 5 percent potassium, by weight plus micronutrients.

2.4 ENGINEERED PLANTING MIX

A. Basis of Design: “Rooflite” Intensive green roof medium, or approved equal.

2.5 ACCESSORIES

A. Organic Mulch: Ground or shredded bark.

B. Weed-control Barriers: Not applicable.

C. Pesticides: Not applicable.

PART 3 - EXECUTION

3.1 HARVESTING

A. Remove Liriope muscari varities within areas where trees will be removed and demolition will occur, and pot for transplanting. Provide 1 gallon containers.

3.2 PLANTING PREPARATION

A. Amend in situ topsoil for replanting. Loosen subgrade of planting areas to a minimum depth of 8 inches. Remove stones larger than 1 in any dimension and sticks, roots, rubbish, and other extraneous matter and legally dispose of them off Owner's property.

1. Apply superphosphate fertilizer directly to subgrade before loosening.
2. Thoroughly blend planting soil off-site before spreading or spread topsoil, apply soil amendments and fertilizer on surface, and thoroughly blend planting soil.
3. Spread planting soil to a compacted depth of 8 inches and not less than required to meet finish grades after natural settlement. Do not spread if planting soil or subgrade is frozen, muddy, or excessively wet.

B. Install engineered planting mix in new planter areas as shown on the drawings. Retain first subparagraph below if required. Coordinate with "Planting Soils" Article.

C. Finish Grading: Grade planting areas to a smooth, uniform surface plane with loose, uniformly fine texture. Roll and rake, remove ridges, and fill depressions to meet finish grades.

3.3 GROUND COVER AND HERBACEOUS PLANT PLANTING

A. Set out and space ground cover and herbaceous plants per Plant Materials Schedule (see Drawings) in even rows with triangular spacing. Use planting soil for backfill.

B. Dig holes large enough to allow spreading of roots. Work soil around roots to eliminate air pockets and leave a slight saucer indentation around plants to hold water.

C. Water thoroughly after planting, taking care not to cover plant crowns with wet soil.

D. Protect plants from hot sun and wind; remove protection if plants show evidence of recovery from transplanting shock.

3.4 PLANTING AREA MULCHING

A. Apply two (2) inch depth of mulch in planting areas and other areas indicated. Do not place mulch within 3 inches of trunks or stems.

1. Trees: Apply 60” diameter mulch ring around trunks or stems.
2. Planting Areas: Apply 2-inch average thickness of mulch over whole surface of planting area, and finish level with adjacent finish grades.

3.5 PLANT MAINTENANCE

A. Maintain plantings by pruning, cultivating, watering, weeding, fertilizing, mulching, restoring planting saucers, resetting to proper grades or vertical position, and performing other operations as required to establish healthy, viable plantings. Spray or treat as required to keep trees and shrubs free of insects and disease.

B. Fill in soil that subsided because of settling or other processes. Replace mulch materials damaged or lost in areas of subsidence.

C. Use Integrated Pest Management techniques to manage pests and invasive species. Apply pesticides only when alternatives are ineffective.

1. Provide Owner with written intention to apply pesticide. Coordinate applications with Owner's operations and others in proximity to the Work. Notify Owner before each application is performed.

D. Protect plants from damage from construction operations. Maintain protection during installation and maintenance periods. Treat, repair, or replace damaged plantings.

END OF SECTION 32 93 00

EXHIBIT B

CONTRACTOR REQUIREMENTS AND PROCEDURES FOR BUSINESS PARTICIPATION OPPORTUNITIES FOR NEW YORK STATE CERTIFIED MBEs/WBEs AND EQUAL EMPLOYMENT OPPORTUNITIES FOR MINORITY GROUP MEMBERS AND WOMEN

Pursuant to New York State Executive Law Article 15-A and 5 NYCRR §§140-145, BPCA recognizes its obligation under the law to promote opportunities for maximum feasible participation of certified MBEs/WBEs and the employment of minority group members and women in the performance of BPCA contracts.

In 2006, the State of New York commissioned a disparity study to evaluate whether MBEs/WBEs had a full and fair opportunity to participate in state contracting. The findings of the study were published on April 29, 2010, under the title "The State of Minority and Women-Owned Business Enterprises: Evidence from New York" (the "Disparity Study"). The report found evidence of statistically significant disparities between the level of participation of MBEs/WBEs in state procurement contracting versus the number of MBEs/WBEs that were ready, willing and able to participate in state procurements. As a result of these findings, the Disparity Study made recommendations concerning the implementation and operation of the statewide certified MBEs/WBEs program. The recommendations from the Disparity Study culminated in the enactment and the implementation of New York State Executive Law Article 15-A, which requires, among other things, that BPCA establish goals for maximum feasible participation of New York State Certified MBEs/WBEs and the employment of minority groups members and women in the performance of New York State contracts.

Business Participation Opportunities for MBEs/WBEs

For purposes of this solicitation, BPCA hereby establishes an overall goal of 30% for MBE/WBE participation, (based on the current availability of qualified MBEs and WBEs). A contractor ("Contractor") on the Contract must document good faith efforts to provide meaningful participation by MBEs/WBEs as subcontractors or suppliers in the performance of the Contract and Contractor agrees that BPCA may withhold payment pending receipt of the required MBE/WBE documentation. The directory of New York State Certified MBEs/WBEs can be viewed at: https://ny.newnycontracts.com/FrontEnd/VendorSearchPublic.asp?TN=ny&XID=7562. For guidance on how BPCA will determine a Contractor's "good faith efforts," refer to 5 NYCRR §142.8.

In accordance with 5 NYCRR §142.13, Contractor acknowledges that if it is found to have willfully and intentionally failed to comply with the MBE/WBE participation goals set forth in the Contract, such finding constitutes a breach of Contract and BPCA may withhold payment from the Contractor as liquidated damages.

Such liquidated damages shall be calculated as an amount equaling the difference between: (1) all sums identified for payment to MBEs/WBEs had Contractor achieved the contractual MBE/WBE goals; and (2) all sums actually paid to MBEs/WBEs for work performed or materials supplied under the Contract.

By submitting a bid or Proposal, a Proposer agrees to demonstrate its good faith efforts to achieve its goals for the utilization of MBEs/WBEs by submitting evidence thereof through the New York State Contract System (the "NYSCS"), which can be viewed at https://ny.newnycontracts.com, provided, however, that a Proposer may arrange to provide such evidence via a non-electronic method by contacting BPCA. Please note that the NYSCS is a one stop solution for all of your MBE/WBE and Article 15-A contract requirements. For additional information on the use of the NYSCS to meet the Proposer's MBE/WBE requirements please see the attached MBE/WBE guidance from the New York State Division of Minority and Women's Business Development, "Your MWBE Utilization and Reporting Responsibilities Under Article 15-A."

A. Additionally, a Proposer agrees to submit a Utilization Plan with their bid or Proposal as evidence of compliance with the foregoing. Any modifications or changes to the Utilization Plan after the Contract award and during the term of the Contract must be reported on a revised Utilization Plan and submitted to BPCA.

B. BPCA will review the submitted Utilization Plan and advise the Proposer of BPCA's acceptance or issue a notice of deficiency within 30 days of receipt.

C. If a notice of deficiency is issued, Proposer agrees that it shall respond to the notice of deficiency within seven (7) business days of receipt by submitting to BPCA, at the address specified in this RFP, or by facsimile at 212-417-2279 a written remedy in response to the notice of deficiency. If the written remedy that is submitted is not timely or is found by BPCA to be inadequate, BPCA shall notify the Proposer and direct the Proposer to submit, within five (5) business days, a request for a partial or total waiver of MBE/WBE participation goals. Failure to file the waiver form in a timely manner may be grounds for disqualification of the bid or Proposal.

D. BPCA may disqualify a Proposer as being non-responsive under the following circumstances:

1) If a Proposer fails to submit a Utilization Plan;

2) If a Proposer fails to submit a written remedy to a notice of deficiency;

3) If a Proposer fails to submit a request for waiver; or

4) If BPCA determines that the Proposer has failed to document good faith efforts.

Contractors shall attempt to utilize, in good faith, any MBE/WBE identified within its Utilization Plan, during the performance of the Contract. Requests for a partial or total waiver of established goal requirements made subsequent to the Contract award may be made at any time during the term of the Contract to BPCA, but must be made no later than prior to the submission of a request for final payment on the Contract.

Contractors are required to submit a Contractor's MBE/WBE Contractor Compliance & Payment Report to BPCA on a monthly basis over the term of the Contract documenting the progress made toward achievement of the MBE/WBE goals of the Contract.

Equal Employment Opportunity Requirements

By submission of a bid or Proposal in response to this RFP, the Proposer/Contractor agrees with all of the terms and conditions of the attached M/WBE – Equal Employment Opportunity Policy Statement. The Contractor is required to ensure that it shall and any subcontractors awarded a subcontract over $25,000 for the construction, demolition, replacement, major repair, renovation, planning or design of real property and improvements thereon, except where such work is for the beneficial use of the Contractor, undertake or continue programs to ensure that minority group members and women are afforded equal employment opportunities without discrimination because of race, creed, color, national origin, sex, age, disability or marital status. For these purposes, equal opportunity shall apply in the areas of recruitment, employment, job assignment, promotion, upgrading, demotion, transfer, layoff, termination, and rates of pay or other forms of compensation. This requirement does not apply to: (i) work, goods, or services unrelated to the Contract or (ii) employment outside New York State.

The Proposer further agrees to submit a MBE/WBE and Equal Employment Opportunity Policy Statement, Form # 4, to BPCA with their Proposal.

To ensure compliance with Article 15-A, Proposer further agrees, where applicable, to submit with the Proposal, a staffing plan identifying the anticipated work force to be utilized on the Contract and if awarded a Contract, will, upon request, submit to BPCA a workforce utilization report identifying the workforce actually utilized on the Contract, if known, through the NYSCS; provided, however, that a Proposer may arrange to provide such report via a non-electronic method by contacting BPCA.

Further, pursuant to Article 15 of the Executive Law (the "Human Rights Law"), all other New York State and Federal statutory and constitutional non-discrimination provisions, the Contractor and sub-contractors will not discriminate

against any employee or applicant for employment because of race, creed (religion), color, sex, national origin, sexual orientation, military status, age, disability, predisposing genetic characteristic, marital status or domestic violence victim status, and shall also follow the requirements of the Human Rights Law with regard to non-discrimination on the basis of prior criminal conviction and prior arrest.

Please Note: Failure to comply with the foregoing requirements may result in a finding of non-responsiveness, non-responsibility and/or a breach of the Contract, leading to the withholding of funds, suspension or termination of the Contract or such other actions or enforcement proceedings as are allowed by the Contract.

For questions on MBE/WBE participation, joint ventures and sub-contracting goals ONLY, please contact Mr. Anthony Peterson at 212.417.2337.

NEW YORK STATE OF OPPORTUNITY | Division of Minority and Women's Business Development

Your MBE/WBE Utilization and Reporting Responsibilities Under Article 15-A

The New York State Contract System ("NYSCS") is your one stop tool compliance with New York State's MBE/WBE Program. It is also the platform New York State uses to monitor state contracts and MBE/WBE participation.

GETTING STARTED

To access the system, please login or create a user name and password at https://ny.newnycontracts.com/FrontEnd/VendorSearchPublic.asp?TN=ny&XID=7562. If you are uncertain whether you already have an account set up or still need to register, please send an email to the customer service contact listed on the Contact Us & Support page, or reach out to your contract's project manager. For verification, in the email, include your business name and contact information.

VENDOR RESPONSIBILITIES

As a vendor conducting business with New York State, you have a responsibility to utilize minority- and/or women-owned businesses in the execution of your contracts, per the MBE/WBE percentage goals stated in your solicitation, incentive proposal or contract documents. NYSCS is the tool that New York State uses to monitor MBE/WBE participation in state contracting. Through the NYSCS you will submit utilization plans, request subcontractors, record payments to subcontractors, and communicate with your project manager throughout the life of your awarded contracts.

There are several reference materials available to assist you in this process, but to access them, you need to first be registered within the NYSCS. Once you log onto the website, click on the **Help & Support** >> link on the lower left hand corner of the Menu Bar to find recorded trainings and manuals on all features of the NYSCS. You may also click on the **Help & Tools** icon at the top right of your screen to find videos tailored to primes and subcontractors. There are also opportunities available to join live trainings, read up on the "Knowledge Base" through the Forum link, and submit feedback to help improve future enhancements to the system. Technical assistance is always available through the **Contact Us & Support** link on the NYSCS website (https://ny.newnycontracts.com/FrontEnd/VendorSearchPublic.asp?TN=ny&XID=7562).

For more information, contact your project manager.

MINORITY AND WOMEN-OWNED BUSINESS ENTERPRISES – EQUAL EMPLOYMENT OPPORTUNITY POLICY STATEMENT

MBE/WBE AND EEO POLICY STATEMENT

I, _____ (the "Contractor"), agree to adopt the following policies with respect to the project being developed at, or services rendered to, the Battery Park City Authority ("BPCA").

MBE/WBE

This organization will and will cause its contractors and subcontractors to take good faith actions to achieve the MBE/WBE contract participations goals set by the State for that area in which the State-funded project is located, by taking the following steps:

(1) Actively and affirmatively soliciting bids for contracts and subcontracts from qualified State certified MBEs or WBEs, including solicitations to MBE/WBE contractor associations.

(2) Requesting a list of State-certified MBEs/WBEs from BPCA and soliciting bids from these MBEs/WBEs directly.

(3) Ensuring that plans, specifications, request for proposals and other documents used to secure bids will be made available in sufficient time for review by prospective MBEs/WBEs.

(4) Where feasible, dividing the work into smaller portions to enhance participations by MBEs/WBEs and encourage the formation of joint venture and other partnerships among MBE/WBE contractors to enhance their participation.

(5) Documenting and maintaining records of bid solicitation, including those to MBEs/WBEs and the results thereof. The Contractor will also maintain records of actions that its subcontractors have taken toward meeting MBE/WBE contract participation goals.

(6) Ensuring that progress payments to MBEs/WBEs are made on a timely basis so that undue financial hardship is avoided, and that bonding and other credit requirements are waived or appropriate alternatives are developed to encourage MBE/WBE participation.

EEO

(a) This organization will not discriminate against any employee or applicant for employment because of race, creed, color, national origin, sex, age, disability or marital status, will undertake or continue existing diversity programs to ensure that minority group members are afforded equal employment opportunities without discrimination, and shall make and document its conscientious and active efforts to employ and utilize minority group members and women in its work force on State contracts.

(b)This organization shall state in all solicitation or advertisements for employees that in the performance of the State contract all qualified applicants will be afforded equal employment opportunities without discrimination because of race, creed, color, national origin, sex disability or marital status.

(c) At the request of BPCA, this organization shall request that each employment agency, labor union, or authorized representative will not discriminate on the basis of race, creed, color, national origin, sex, age, disability or marital status and that such union or representative will affirmatively cooperate in the implementation of this organization's obligations herein.

(d) The Contractor shall comply with the provisions of the Human Rights Law, all other State and Federal statutory and constitutional non-discrimination provisions. The Contractor and subcontractors shall not discriminate against any employee or applicant for employment because of race, creed (religion), color, sex, national origin, sexual orientation, military status, age, disability, predisposing genetic characteristic, marital status or domestic violence victim status, and shall also follow the requirements of the Human Rights Law with regard to non-discrimination on the basis of prior criminal conviction and prior arrest.

(e) This organization will include the provisions of sections (a) through (d) of this agreement in every subcontract in such a manner that the requirements of the subdivisions will be binding upon each subcontractor as to work in connection with the State contract.

Agreed to this _____ day of _____, 2015

By _____

Print: _____ Title: _____

_____is designated as the Contractor's Minority Business Enterprise Liaison responsible for administering the Minority and Women-Owned Business Enterprises - Equal Employment Opportunity (MBE/WBE - EEO) program.

MBE/WBE Contract Goals

30% Minority and Women's Business Enterprise Participation

___% Minority Business Enterprise Participation

___% Women's Business Enterprise Participation

EEO Contract Goals (if applicable)

___% Minority Labor Force Participation

___% Female Labor Force Participation

_____
(Authorized Representative)

Title: _____

Date: _____

Diversity Practices Questionnaire

I, _____, as _____ (title) of _____firm or company (hereafter referred to as the company), swear and/or affirm under penalty of perjury that the answers submitted to the following questions are complete and accurate to the best of my knowledge:

1. Does your company have a Chief Diversity Officer or other individual who is tasked with supplier diversity initiatives? Yes or No

If yes, provide the name, title, description of duties, and evidence of initiatives performed by this individual or individuals.

2. What percentage of your company's gross revenues (from your prior fiscal year) was paid to New York State certified minority and/or women-owned business enterprises as subcontractors, suppliers, joint-venture's, partners or other similar arrangement for the provision of goods or services to your company's clients or customers?

3. What percentage of your company's overhead (i.e. those expenditures that are not directly related to the provision of goods or services to your company's clients or customers) or non-contract-related expenses (from your prior fiscal year) was paid to New York State certified minority- and women-owned business enterprises as suppliers/contractors?[1]

4. Does your company provide technical training[2] to minority- and women-owned business enterprises? Yes or No

If yes, provide a description of such training which should include, but not be limited to, the date the program was initiated, the names and the number of minority- and women-owned business enterprises participating in such training, the number of years such training has been offered and the number of hours per year for which such training occurs.

[1] Do not include onsite project overhead.

[2] Technical training is the process of teaching employees how to more accurately and thoroughly perform the technical components of their jobs. Training can include technology applications, products, sales and service tactics, and more. Technical skills are job-specific as opposed to soft skills, which are transferable.

5. Is your company participating in a government approved minority- and women-owned business enterprise mentor-protégé program?

If Yes, identify the governmental mentoring program in which your company participates and provide evidence demonstrating the extent of your company's commitment to the governmental mentoring program.

6. Does your company include specific quantitative goals for the utilization of minority- and women-owned business enterprises in its non-government procurements? Yes or No

If Yes, provide a description of such non-government procurements (including time period, goal, scope and dollar amount) and indicate the percentage of the goals that were attained.

7. Does your company have a formal minority- and women-owned business enterprise supplier diversity program? Yes or No

If Yes, provide documentation of program activities and a copy of policy or program materials.

8. Does your company plan to enter into partnering or subcontracting agreements with New York State certified minority- and women-owned business enterprises if selected as the successful respondent? Yes or No

If Yes, complete the attached Utilization Plan

All information provided in connection with the questionnaire is subject to audit and any fraudulent statements are subject to criminal prosecution and debarment.

Signature of Owner/Official	_____
Printed Name of Signatory	_____
Title	_____
Name of Business	**Error! Reference source not found.**
Address	_____
City, State, Zip	_____

STATE OF _____

COUNTY OF) ss:

On the _____ day of _____, 201_, before me, the undersigned, a Notary Public in and for the State of _____, personally appeared _____, personally known to me or proved to me on the basis of satisfactory evidence to be the individual whose name is subscribed to this certification and said person executed this instrument.

_____

Notary Public

EXHIBIT C

BPCA's standard form of contract

(attached)

CONSTRUCTION AGREEMENT

between

BATTERY PARK CITY AUTHORITY,
d/b/a HUGH L. CAREY BATTERY PARK CITY AUTHORITY

and

[CONTRACTOR COMPANY NAME]

Dated as of _____
Contract No. [xx-xxxx]

[PROJECT NAME]

TABLE OF CONTENTS

Contents

ARTICLE 1 - DEFINITIONS 7
ARTICLE 2 - SCOPE OF WORK, MATERIALS AND LABOR 8
2.1 Definition of Work 8
2.2 Contract Documents 9
2.3 Intent of Contract Documents 9
2.4 Completion of Drawings and Specifications 10
2.5 Title to Materials 10
2.6 Contractor's Obligations 10
2.7 "Or Equal" Clause 11
2.8 Quality and Labeling 12
ARTICLE 3 - COMMENCEMENT AND COMPLETION OF THE WORK 12
3.1 Commencement, Completion and Progress Schedule 12
3.2 Coordination with Other Contractors 14
3.3 Notice of Delay 15
3.4 Extension of Time 15
ARTICLE 4 - CONTRACT PRICE 15
ARTICLE 5 - METHOD, SCHEDULE AND TERMS OF PAYMENTS 16
5.1 Partial Payment 16
5.2 Requisitions 16
5.3 Trade Payment Breakdown 16
5.4 Payment for Stored Materials 16
5.5 Receipts and Releases of Liens 17
5.6 Time of Payment 17
5.7 Reduction of Retainage 17
5.8 Final Payment 17
5.9 Release and Consent of Surety 18
5.10 BPCA's Right to Audit and Inspect Records 18
5.11 Withholding of Payments 18
ARTICLE 6 – CONTRACTOR 19
6.1 Superintendence by Contractor, Discipline and Employee Skills 19
6.2 Representations and Warranties 19
6.3 Verifying Dimensions and Site Conditions 19
6.4 Copies of Contract Documents for Contractor 19
6.5 Meetings 20
6.6 Related Work 20
6.7 Surveys and Layout 20
6.8 Reports and Access 20
6.9 Financial Information 20
ARTICLE 7 - CONTRACT ADMINISTRATION 20
7.1 Architect's Responsibilities and Functions 20
7.2 Construction Manager's Responsibilities and Functions 20

7.3 Scope of Responsibility of Architect and Construction Manager....21
ARTICLE 8 - INSPECTION AND ACCEPTANCE....21
8.1 Access to the Work....21
8.2 Notice of Required Inspections and Tests....21
8.3 Additional Inspections and Tests....21
8.4 Uncovering of Work....21
8.5 Correction of Work....22
8.6 Certificate of Substantial Completion....22
8.7 Completion of Work and Acceptance....22
ARTICLE 9 - CHANGES IN THE WORK....22
9.1 Change Orders....22
9.2 Change in Contract Price and Time....23
9.3 Field Orders....24
9.4 Changed Conditions....24
ARTICLE 10 - SUBCONTRACTS AND PURCHASE ORDERS....24
10.1 Selection of Subcontractors and Materialmen and Approval of Subcontracts and Purchase Orders....24
10.2 Access by BPCA and Others....25
10.3 Retainage....25
10.4 Miscellaneous....25
ARTICLE 11 - ASSIGNMENT....26
11.1 No Assignment of Duties....26
11.2 No Assignment of Monies....26
11.3 Assignment by BPCA....27
ARTICLE 12 - MECHANICS' LIENS AND CLAIMS....27
ARTICLE 13 – INSURANCE AND CONTRACT SECURITY....27
13.1 Insurance....27
13.2 Effect of Procurement of Insurance....30
13.3 Contract Security....30
13.4 Additional or Substitute Bond....30
ARTICLE 14 - CLAIMS FOR EXTRA WORK....30
ARTICLE 15 - TERMINATION....31
15.1 Termination for Cause....31
15.2 Termination for Convenience of BPCA....33
15.3 Suspension of Work....33
ARTICLE 16 - COMPOSITE DRAWINGS AND COOPERATION....34
ARTICLE 17 - PROTECTION OF RIGHTS, PERSONS AND PROPERTY....34
17.1 Accident Prevention....34
17.2 Safety Programs....34
17.3 Protection of Work and Property....34
17.4 Adjoining Property....35
17.5 Risks Assumed by Contractor....35
ARTICLE 18 - USE PRIOR TO ACCEPTANCE BY BPCA....36
ARTICLE 19 - EXEMPTION FROM SALES AND COMPENSATING USE TAXES....36

19.1 BPCA Exempt....36
19.2 Certificates....36
ARTICLE 20 - WARRANTIES AND GUARANTIES....36
20.1 In General....36
20.2 Additional Guaranties....37
20.3 Repair by Another....37
ARTICLE 21 - INDEMNITY....37
21.1 Delay or Failure....37
21.2 Inventions....37
21.3 Liability....38
ARTICLE 22 - PATENTS AND ROYALTIES....38
ARTICLE 23 - AS-BUILT DRAWINGS....39
ARTICLE 24 - SHOP DRAWINGS AND SAMPLES....39
24.1 Contractor Submittal....39
24.2 Contractor's Responsibility....39
ARTICLE 25 – NOTICES....39
ARTICLE 26 - EMPLOYMENT AND DIVERSITY....40
26.1 Definitions....40
26.2 Equal Employment Opportunities for Minority Group Members and Women....41
26.3 Workforce Participation....43
26.4 Minority Business Enterprise (MBE) Participation and Women's Business Enterprise Participation....44
ARTICLE 27 - STANDARD PROVISIONS....45
27.1 Provision Required by Law Deemed Inserted....45
27.2 Compliance with Laws, Rules and Regulations....46
27.3 Applicable Law, Forum and Jurisdiction....46
27.4 No Third Party Rights....46
27.5 Exculpation; Limitation of Liability....46
27.6 Protection of Lives and Health....46
27.7 Waiver of Immunity Clause....47
27.8 Prohibited Interests....47
27.9 Labor Provisions....47
27.10 Disputes Resolution Procedure....49
27.11 Additional Provisions Relating to the Prosecution of Claims for Money Damages....50
27.12 Limitation on Actions....50
27.13 Waiver of Remedies....51
27.14 Modification of Agreement....51
27.15 Signs and Parking....51
27.16 Entire Agreement....51
27.17 Rights and Remedies....51
27.18 Participation in International Boycott Prohibited....51
27.19 Compliance with "Buy-American" Statutes....52
27.20 Permitted Successors....52

27.21 MacBride Fair Employment Principles....52
27.22 Iran Divestment Act....52
27.23 Termination for Failure to Disclose Under State Finance Law §139k....52
27.24 Labor Peace....52
27.25 Comptroller's Approval....52
27.26 Key Person/Personnel....53
27.27 Form of Agreement Not an Offer....53
27.28 General Responsibility....53

EXHIBITS

CONSTRUCTION AGREEMENT

AGREEMENT made as of the _____ day of _____, 2014, between BATTERY PARK CITY AUTHORITY, d/b/a HUGH L. CAREY BATTERY PARK CITY AUTHORITY, a body corporate and politic, constituting a public benefit corporation and having a place of business at One World Financial Center, 24th Floor, New York, New York 10281 ("Authority," "BPCA" or "Owner") and CONTRACTOR COMPANY NAME, a corporation incorporated under the laws of STATE, having an office at Street Address, City, Zip, Phone, ("Contractor").

W I T N E S S E T H:

WHEREAS, BPCA has fee title to certain real property located in the City, County and State of New York, generally consisting of approximately 92 acres of land located on the west side of lower Manhattan, bounded by Pier A to the South, the westerly extension of Reade Street to the North, the United States Bulkhead Line to the East and the United States Pierhead Line to the West (collectively, "Battery Park City"); and

WHEREAS, BPCA has caused the staged development of Battery Park City, in individual parcels, creating a richly diversified mixed use community providing residential and commercial space, with related amenities such as parks, plazas, recreational areas and a waterfront esplanade; and

WHEREAS, BPCA intends to hire a contractor to perform [type of services], consisting of the Work, as hereinafter defined, for the [structure] upon which work will be performed (the "Project"), located in and adjacent to [location], in Battery Park City, in the Borough of Manhattan, County, City and State of New York (the "Site"); and

WHEREAS, Contractor has been selected to perform the Work, as hereinafter defined, upon the terms and conditions hereinafter provided; and

NOW, THEREFORE, in consideration of the mutual covenants hereinafter set forth, Contractor and BPCA hereby agree as follows:

ARTICLE 1 - DEFINITIONS

The following terms, wherever used in the Contract Documents, as defined herein, shall have the meanings set forth below or in the Section enumerated below next to each term:

(a) Agreement - as defined in Section 2.2(a).

(b) Agreement Termination Date - as defined in Section 3.1(a)

(c) Architect - Name, address, etc. or n/a.

(d) Artist - n/a.

(e) Authority - as defined in the introductory clause of this Agreement.

(f) BPCA - as defined in the introductory clause of this Agreement. BPCA hereby designates BPCA Person and Title, Project Manager, as the representative of BPCA for the purpose of acting on behalf of BPCA whenever action is required to be taken hereunder by BPCA. Such designation may be revoked in writing at any time after notice given by BPCA to Contractor. In addition, such representative of BPCA shall have full power and authority to delegate in writing any or all of her responsibilities hereunder to any one or more persons after notice to Contractor.

(g) Certificate of Substantial Completion - as defined in Section 8.6.

(h) Change Order - as defined in Section 9.1(b).

(i) Construction Manager - [name and address]

(j) Contract Documents - as defined in Section 2.2.

(k) Contract Price - as defined in Article 4.

(l) Contract Time - the duration of time during which Construction Manager schedules and coordinates the Work of Contractor pursuant to Section 7.2 hereof.

(m) Contractor - as defined in the introductory clause of this Agreement.

(n) Drawings - Project drawings comprising part of Exhibit [x].

(o) Engineer - [name and address]

(p) Extra Work - Any work in addition to the Work to be performed by Contractor pursuant to the Contract Documents.

(q) Field Order - as defined in Section 9.3.

(r) Final Acceptance - as defined in Section 8.7.

(s) Final Requisition - as defined in Section 5.2.

(t) Guarantor - as defined in Section 27.3.

(u) Joint Venture - an entity created pursuant to a written agreement among two or more contractors pursuant to which each shares in the direction and performance of the Work and shares in a stated percentage of profits or losses.

(v) Key Person/Personnel - as defined in Section 27.25.

(w) Intentionally Omitted.

(x) Materialman - Supplier of Materials.

(y) Materials - All products, materials, fixtures, tools, equipment, apparatus, and furnishings intended to form a part of the Work.

(z) Minority Business Enterprise or Minority Owned Business Enterprise or MBE - as defined in Article 26.

(aa) Minority or Minority Group Member - as defined in Article 26.

(bb) Notice to Proceed – A written directive from BPCA to Contractor signed by a duly authorized BPCA representative directing Contractor to begin performance of the Work set forth in this Agreement on a particular date.

(cc) Payment Bond - as defined in Section 13.3.

(dd) Performance Bond - as defined in Section 13.3.

(ee) Preceding Covered Date - as defined in Section 5.5.

(ff) Product Data - Illustrations, standard schedules, performance charts, instructions, brochures, diagrams and other information furnished by Contractor to illustrate a Material, product or system for some portion of the Work.

(gg) Progress Schedule - as defined in Section 3.1(a).

(hh) Project - as defined in the third Recital of this Agreement.

(ii) Purchase Order - as defined in Section 10.1(e).

(jj) Requisitions - as defined in Section 5.2.

(kk) Samples - Physical examples which illustrate Materials or workmanship and establish standards by which the Work will be judged.

(ll) Site - as defined in the third whereas clause of this Agreement.

(mm) Specifications - the specifications comprising part of Exhibit [x].

(nn) Subcontract - An Agreement between the Contractor and a Subcontractor (as defined in subsection (nn), below) for work on the Site.

(oo) Subcontractor - A person, firm, partnership or corporation under contract with Contractor.

(pp) Term - as defined in Section 3.1(i).

(qq) Trade Payment Breakdown - as defined in Section 5.3.

(rr) Women's Business Enterprise or Women Owned Business Enterprise or WBE - as defined in Article 26.

(ss) Work - as defined in Section 2.1.

(tt) Work Completion Date - as defined in Section 3.1(a).

ARTICLE 2 - SCOPE OF WORK, MATERIALS AND LABOR

2.1 Definition of Work

Contractor shall perform and complete (and shall cause all Subcontractors to perform and complete) for BPCA the work more particularly described in Exhibit [x] - Scope of Work

annexed hereto and made a part hereof, required by and in conformity with the Contract Documents in connection with the construction of the Project on the Site. All materials to be furnished and labor and work to be performed and completed by Contractor and/or Subcontractors as required in the Contract Documents and in conformity with all requirements applicable with respect thereto are herein collectively referred to as the "Work."

2.2 Contract Documents

The "Contract Documents" shall consist of the following:

(a) This instrument (the "Agreement"), which includes, in addition to the text comprising Articles 1 through 27, the following:

(1) Exhibit A:

(2) Exhibit B:

Etc...

(b) The Payment and Performance Bonds (as defined in Section 13.3).

(c) Change Orders adopted pursuant to Article 9.

The Contract Documents form the contract between BPCA and Contractor. References in the Contract Documents to "the Contract", "this Contract" or "the Construction Contract" shall be deemed to include all of the Contract Documents. References to "this Agreement" or "the Agreement" shall refer to this instrument (including the Exhibits attached hereto), which is one of the Contract Documents.

2.3 Intent of Contract Documents

(a) The intent of the Contract Documents is to include in the Work all labor and materials, insurance, tools, equipment, permits, licenses, taxes, approvals, transportation, surveys, testing, field Engineering and other professional services (other than the services of BPCA's Architect, Construction Manager, Engineers and attorneys, and the inspection, survey and testing services of BPCA) and any other items required to execute and complete the Work satisfactorily and in accordance with the Contract Documents. Contractor shall perform and complete the Work in accordance with the true intent and meaning of the Contract Documents and shall perform all Work incident thereto or as is usually performed in connection therewith or as is reasonably inferable therefrom, it being the intention that all work usually performed by the trade covered by this Agreement and necessary to produce the intended result be performed by Contractor whether or not specifically covered by the Contract Documents.

(b) The Contract Documents are complementary and what is called for by one shall be as binding as if called for by all.

(c) If any conflicts or ambiguities are found in or between the Drawings and Specifications, or among any of the Contract Documents, they shall be brought to the attention of Construction Manager immediately for resolution. Architect and Construction Manager will interpret the Contract Documents so as to secure in all cases the most substantial and complete performance of the Work as is most consistent with the needs and requirements of the Work. In the event that Architect and Construction Manager shall disagree as to the interpretation of the Contract Documents, such dispute shall be presented to BPCA, which shall have sole authority to resolve the dispute.

(d) Addenda to parts of the Contract Documents are for the purpose of varying, modifying, rescinding or adding to the affected portion of the Contract Documents. All addenda should be read together with the portions of the Contract Documents to which they pertain. Where an addendum modifies a portion of a paragraph or a Section, the remainder of the paragraph or Section shall remain in force unless otherwise stated in the addendum.

(e) Captions, headings, cover pages, tables of contents and footnote instructions

contained in the Contract Documents are inserted only to facilitate reference and for convenience and in no way define, limit or describe the scope, intent or meaning of any provision of the Agreement.

(f) Words and abbreviations which have well-known technical or trade meanings are used in the Contract Documents in accordance with such recognized meanings.

(g) Drawings and Specifications are complementary. Anything shown in the Drawings and not mentioned in the Specifications, or mentioned in the Specifications and not shown in the Drawings, shall have the same effect as if shown or mentioned in both.

(h) A typical or representative detail indicated on the Drawings shall constitute the standard for workmanship and Materials throughout corresponding parts of the Work. Where necessary, and where reasonably inferable from the Drawings or Specifications, Contractor shall adapt such representative detail for application to such corresponding parts of the Work. The details of such adaptation shall be subject to prior approval by Architect. Repetitive features shown in outline on the Drawings shall be in exact accordance with corresponding features completely shown.

(i) The layout of mechanical and electrical systems, equipment, fixtures, piping, ductwork, conduit, specialty items, and accessories indicated on the Drawings is diagrammatic, and all variations in alignment, elevation, and detail required to avoid interferences and satisfy Architectural and structural limitations are not necessarily shown. Actual layout of the Work shall be carried out without affecting the Architectural and structural integrity and limitations of the Work and shall be performed in such sequence and manner as to avoid conflicts, provide clear access to all control points, including valves, strainers, control devices, and specialty items of every nature related to such systems and equipment, obtain maximum headroom, and provide adequate clearances as required for operation and maintenance.

2.4 Completion of Drawings and Specifications

Contractor acknowledges that there are items of work which are not drawn or specified with complete detail in the Drawings and Specifications but which are required for the completion of the Work. Any such item, when identified as part of the reasonable development of the Work, shall be drawn or specified by Architect in consultation with Contractor, in a manner consistent with contemplated kind and quality and customary standards. When such drawing or specification is approved by BPCA, the drawing or specification so approved shall thereupon be part of the Contract Documents and the item of work shall be performed by Contractor as part of the Work without further action or order of Construction Manager or BPCA and without any increase in the Contract Price (as hereinafter defined) as if such drawing and specification were originally included in the Contract Documents.

2.5 Title to Materials

Title to all Materials shall immediately vest in BPCA upon payment in respect of such Materials, whether or not then incorporated or installed into the Project. The Materials shall then become the sole property of BPCA subject to the right of BPCA, Construction Manager or Architect to reject same for failure to conform to the standards of any or all of the Contract Documents. Title to all Work and Materials shall be in BPCA, free and clear of all liens, claims, security interests or encumbrances. Contractor warrants that no Work or Materials shall be fabricated or delivered to the Site by Contractor or any Subcontractor or Materialman subject to any security interest, lien or similar encumbrance.

2.6 Contractor's Obligations

(a) Contractor shall in a good and workmanlike manner perform all the Work required by this Agreement in accordance with the best practice of Contractor's trade within the time specified herein. Contractor shall supervise and direct the Work using its best skill and attention. Contractor shall be solely responsible for all construction means, methods, techniques, sequences and procedures within the scope of Contractor's Work.

(b) Contractor shall furnish, erect, maintain, and remove such construction plant and such temporary Work as may be required for the performance of the Work. Contractor shall be responsible for the safety, efficiency and adequacy of Contractor's plant, appliances and methods, and for damage which may result from failure or improper construction, maintenance or operation of such plant, appliances and methods. Contractor shall comply with all terms of the Contract Documents, and shall do, carry on and complete the entire Work under the direction of and to the satisfaction of BPCA.

(c) Contractor shall provide all equipment, tools and materials and whatever else may be required for proper performance of the Work unless stated otherwise in the Contract Documents.

(d) Contractor shall deliver all Materials at such times and in such quantities as will insure the speedy and uninterrupted progress of the Work. All Materials shall be delivered to the Site in proper order and quantity and shall be stored at the Site, if storage space is available in Construction Manager's opinion, in such places as Construction Manager shall direct; provided, that no delivery of Materials shall be made to the Site without prior approval by Construction Manager. Contractor has been advised and is aware that the Project is located in a congested metropolitan area, and there may not be sufficient space to store Materials on Site. If storage space is unavailable on Site, Contractor shall make arrangements to store materials off Site at Contractor's own cost. Contractor shall not be entitled to additional compensation for moving Materials from one storage area to another, whether such storage areas are on or off Site. No Materials shall be removed from the Site without the consent of Construction Manager. Contractor shall handle and take care of all Materials used in performance of the Work whether furnished by Contractor or BPCA, as the same are delivered to the Site or to any applicable offsite storage location and shall be solely responsible for the security and condition of the same. After final completion and acceptance of the Work, or sooner if requested by Construction Manager, Contractor shall remove all surplus Materials and scaffolding furnished by it which have not been incorporated in the Work.

(e) Contractor shall follow and perform the Work in accordance with the Contract Documents as interpreted by Architect, Construction Manager, and BPCA.

(f) Unless otherwise provided in the Contract Documents, Contractor shall secure and pay for all permits and governmental fees, licenses and inspections necessary for the proper execution and completion of the Work. Contractor shall give all notices and comply with all laws, ordinances, rules, regulations and lawful orders of any public authority bearing on the performance of the Work. If Contractor observes that any of the Contract Documents are at variance with any applicable laws in any respect, Contractor shall promptly notify Architect and Construction Manager in writing, and any necessary changes shall be accomplished by appropriate modification. If Contractor performs any Work knowing it to be contrary to such laws, ordinances, rules and regulations, and without such notice to Architect and Construction Manager, Contractor shall assume full responsibility therefor and shall bear all costs attributable thereto.

(g) Contractor shall be responsible for collecting all paper, cartons and other debris caused by its Work or personnel, placing the same in a location designated by Construction Manager and keeping the portion of the Site upon which Contractor is performing the Work free from all debris.

(h) Contractor shall attend meetings as directed by BPCA or Construction Manager.

2.7 "Or Equal" Clause

(a) The Materials of manufacturers referred to in the Specifications and on the Drawings are intended to establish the standard of quality and design required by Architect; however, Materials of manufacturers, other than those specified, may be used if equivalent and approved by Architect, Construction Manager and BPCA.

(b) It is deemed that the term "or approved equal" is included after all Materials referred to in the Specifications or on the Drawings.

(c) Architect will initially judge the equivalency of proposed substitute Materials. Architect will make written recommendation of acceptance or rejection to Construction Manager and/or BPCA. Construction Manager and/or BPCA will then authorize Architect to issue to Contractor written approval or rejection of the substitution.

(d) If Contractor desires to use a substitute item, Contractor shall make application to Architect in writing in sufficient time (with regard to the progress of the Work, the period of delivery of the goods concerned and adequate time for Architect's review) stating and fully identifying the proposed substitute, cost changes (if any), and submitting substantiating data, samples, brochures of the item proposed. It is Contractor's responsibility to provide at its sole expense sufficient evidence by tests or other means to support any request for approval of substitutions.

(e) Prior to proposing any substitute item, Contractor shall satisfy itself that the item Contractor proposes is, in fact, equal to that specified and had been used satisfactorily in similar applications to the application proposed for the Work, for at least three years, that it will fit into the space allocated and within the load allocated for the same, that it affords comparable ease of operations, maintenance and service, that its appearance, longevity and suitability for the climate and use are comparable to that specified, and that the substitution requires no change in dimension or design of any other Work of Contractor, of any other contractor or in the time required for the performance thereof.

(f) The burden of proof that a proposed substitution is equal to a specified item shall be upon Contractor, who shall support its request with sufficient test data and other means to permit Architect to make a fair and equitable decision on the merits of the proposal. Any item by the manufacturer other than those cited in the Contract Documents, or of brand name or model number or of generic species other than those cited in the Contract Documents, will be considered a substitution.

(g) Acceptance of substitutions shall not relieve Contractor from responsibility for compliance with all the requirements of the Contract Documents. If, notwithstanding the provisions of subsection (e) above, changes in other parts of the Work or the work of other contractors are required by its substitutions, Contractor shall be responsible for the costs of any such changes including the cost of all design and redesign services related thereto incurred by the Architect and his consultants.

(h) The Contract Time shall not be extended by any circumstances resulting from a proposed substitution, nor shall Contractor be entitled to any compensation for any delay caused thereby or related thereto.

2.8 Quality and Labeling

All Materials furnished shall be new and the quality thereof shall be in accordance with the Contract Documents. When Materials are specified to conform to a given standard, the Materials delivered to the Site shall bear manufacturer's labels stating that the Materials meet such standard. The above requirements shall not restrict or affect BPCA's right to test Materials as provided in this Agreement.

ARTICLE 3 - COMMENCEMENT AND COMPLETION OF THE WORK

3.1 Commencement, Completion and Progress Schedule

(a) Contractor shall prepare and submit a progress schedule for the Work ("Progress Schedule for the Work") and agrees to be bound by and comply with the Work Completion Date and the Progress Schedule for the Project (as the Progress Schedule for the Project shall be updated pursuant to subsection (b)) and waives any right to charge or claim damages or any increased cost, charges or expenses against BPCA, Construction Manager, or Architect, for delays or disruptions from any cause whatsoever. Contractor's sole remedy as against BPCA, Construction Manager, or Architect for any delays or disruptions shall be as provided in Section 3.4 hereof. Notwithstanding the foregoing, the Work shall be completed by no later than [date] (the "Work Completion Date") with time being of the essence in respect of said Work

Completion Date, as more fully set forth in subsection (h) below; this Agreement shall terminate by [date] (the "Agreement Termination Date").

(b) The Progress Schedule for the Work shall be formatted in a detailed precedence-style critical path method, or such other format satisfactory to BPCA and Construction Manager and shall also (a) provide a graphic representation of all activities and events including float values that will affect the critical path of the Work, (b) incorporate and coordinate all pertinent information involving each phase of Work, and (c) identify dates that are critical to ensuring the timely and orderly completion of the work in accordance with the requirements of the Contract Documents, including the dates for Substantial Completion of each respective phase of the Work. The Progress Schedule for the Work shall be updated weekly, or at any other time at the request of Construction Manager or BPCA, and submitted to Construction Manger and BPCA for review and approval. Failure to submit any requested update shall constitute a material breach of this Agreement. The Contractor shall promptly give written notice of any actual or potential delays to BPCA and Construction Manager. After submission of the Progress Schedule for the Work, Construction Manager shall coordinate the Progress Schedule for the Work with the Progress Schedule for the Project. The Progress Schedule for the Work may be revised by Construction Manager from time to time.

(c) Contractor shall commence the Work upon receipt of a written Notice to Proceed signed by BPCA, and shall prosecute the Work diligently and in accordance with the time and place requirements of the Project as determined and directed by Construction Manager, by using such means and methods of construction as will assure that the Work will be performed hereunder in accordance with the Contract Documents and Progress Schedule for the Work, and to the satisfaction of BPCA, Architect, and Construction Manager.

(d) If, in the opinion of Construction Manager, Contractor falls behind the Progress Schedule for the Project then in effect, Contractor shall take whatever steps may be necessary to improve its progress and shall, if requested by Construction Manager, submit operational plans to demonstrate the manner in which the lost time may be regained. It is the responsibility of Contractor to maintain its schedule so as not to delay the progress of the Project or the schedules of other contractors. If Contractor delays the progress of its Work or the work of other contractors, it shall be the responsibility of Contractor to increase the number of workers, the number of shifts, the days of Work and/or, to the extent permitted by law, to institute or increase overtime operations, all without additional cost to BPCA, in order to regain any time lost and maintain the Progress Schedule for the Project then in effect as established by Construction Manager.

(e) If Contractor shall fail to complete the Work by the Work Completion Date, or within the time to which such completion may have been extended, BPCA may, at its option, withhold from any sums otherwise due and owing to Contractor hereunder, so much of the balance thereof as BPCA shall deem necessary to secure it against any costs, expenses, or damages which may be incurred by BPCA as a result of said failure, but any such withholding shall not be deemed to be a waiver of any rights hereunder, and Contractor shall be liable to and shall indemnify and hold BPCA harmless from any and all cost, expense or damage incurred by BPCA by reason of such failure.

(f) If Contractor shall neglect, fail or refuse to complete the Work on or before the Work Completion Date or any changes thereto in accordance with, or upon the expiration of, any proper extension granted by BPCA, Contractor agrees to pay to BPCA $_____, not as a penalty, **but as liquidated** damages for loss of beneficial use of the Project, for each and every calendar day that the Contractor is in default. Default shall include abandonment of the Work by Contractor.

(g) Said amount of liquidated damages is agreed upon by and between Contractor and BPCA because of the impracticability and extreme difficulty of fixing and ascertaining the actual damages which BPCA would sustain for loss of beneficial use of the Project in the event of delay in completion, and said amount is agreed to be the amount of damages sustained by BPCA and said amount may be retained from time to time by BPCA. The foregoing liquidated damages are intended to compensate BPCA only for the loss of beneficial use of the Project. In addition, Contractor shall be liable to BPCA, to the fullest extent permitted by law, for whatever actual damages (other than actual loss of beneficial use) BPCA may incur as a result of any actions or

inactions of Contractor or its Subcontractors including, without limitation, interest expense and carrying costs, liabilities to other Contractors working on the Project or other third parties, job extension costs, and other losses incurred by BPCA. The provisions of this paragraph are exclusive to BPCA, and shall not accrue to other contractors or third parties.

(h) It is further agreed that time is of the essence for each and every portion of the Work. In any instance in which additional time is allowed for the completion of any Work, the new time of completion established by said extension shall be of the essence. Contractor shall not be charged with liquidated damages or any excess cost if BPCA determines that Contractor is without fault and that the delay in completion of the Work is due:

(1) to any preference, priority or allocation order duly issued by the Government of the United States or the State of New York;

(2) to an uncontemplated cause beyond the control and without the fault of, or negligence of Contractor, and approved by BPCA, including, but not limited to, acts of God or of public enemy, fires, epidemics, quarantine, strikes, freight embargoes and unusually severe weather; and

(3) to any delays of Subcontractors or Materialmen occasioned by any of the causes specified in Subsections 1 and 2 of this paragraph.

(i) Notwithstanding the foregoing, and whether or not, at any given time, a Progress Schedule, or update thereto (as appropriate) has been submitted, the Work shall be completed by the Work Completion Date (with the period between commencement of the Work and the Work Completion Date being referred to herein as the "Term").

(j) Notwithstanding anything to the contrary, a schedule submitted by Contractor showing a time of completion earlier than that specified in the Contract shall not entitle Contractor to any additional compensation in the event the earlier time of completion is not realized.

3.2 Coordination with Other Contractors

Contractor shall coordinate the Work to be performed hereunder with the work of other contractors performing work for the Project in such manner as Construction Manager shall direct. Contractor shall indemnify and hold BPCA, Construction Manager and Architect harmless from any and all claims or judgments for damages, costs and expenses to which BPCA, Construction Manager or Architect may be subjected or which they may suffer or incur by reason of Contractor's failure to promptly comply with Construction Manager's directions. If Contractor notifies Construction Manager in writing that another contractor is failing to coordinate its work with the Work to be performed hereunder, Construction Manager shall promptly investigate the charge. If Construction Manager finds that charge to be true, it shall promptly issue such direction to the other contractor with respect thereto as the situation may require. BPCA, Construction Manager and Architect shall not, however, be liable for any damages suffered by Contractor by reason of the other contractor's failure to promptly comply with the directions so issued by Construction Manager or by reason of another contractor's default in performance. Should Contractor sustain any damage through any act or omission of any other contractor, Contractor shall have no claim against BPCA, Construction Manager or Architect for such damage but shall have a right to recover such damage from the other contractor, under a provision similar to a provision contained in the following sentence which is part of this Agreement and which has been or will be inserted in the contracts with the other contractors engaged in the Project.

Should any other contractor having or who shall hereafter have a contract with BPCA for the performance of work upon the Project sustain any damage through any act or omission of Contractor hereunder, Contractor agrees to reimburse such other contractor for all such damages and to indemnify and hold BPCA, Construction Manager and Architect harmless from all such claims. Any claim against a performance bond surety made by any contractor shall be subordinated to any claim of BPCA then existing or that may arise in the future against such other contractor or its performance bond surety.

3.3 Notice of Delay

Should Contractor be or anticipate being delayed or disrupted in performing the Work hereunder for any reason, including, without limitation, its financial condition or Contractor's general nonpayment of its debts as such debts become due, it shall promptly and in no event more than three (3) days after the commencement of any condition which is causing or is threatening to cause such delay or disruption notify Construction Manager in writing of the effect of such condition upon BPCA's Progress Schedule for the Project, stating why and in what respects the condition is causing or is threatening to cause delay, provided, however, that notwithstanding the above, if such delay or disruption, or anticipated delay or disruption, should be the result of any change or anticipated change in Contractor's financial condition, Contractor shall notify Construction Manager forthwith of such cause or anticipated cause. Failure to strictly comply with this notice requirement shall be sufficient cause to deny Contractor a change in schedule and to require it to conform to the Progress Schedule for the Project then in effect established by Construction Manager.

3.4 Extension of Time

(a) An extension of time under the Progress Schedule for the Project then in effect may be granted by BPCA subject to the provisions hereof upon written application therefor by Contractor. An application for an extension of time under the Progress Schedule for the Project then in effect must set forth in detail the nature of each cause of delay in the performance of the Work, the date or dates upon which each cause of delay began and ended and the number of days delay attributable to each such cause. After the application is submitted, Contractor shall supply any other data that Construction Manager may request.

(b) Contractor shall be entitled to an extension of time under the Progress Schedule for the Project then in effect for delays in the performance of the Work, if caused:

(1) solely by uncontemplated acts or omissions of BPCA, Construction Manager or Architect; or

(2) by the uncontemplated acts or omissions of other contractors or uncontemplated causes beyond the control and without the fault or negligence of Contractor including, but not limited to, acts of God, acts of public enemy, acts of any Government body, fires, floods, epidemics, quarantine restrictions, strikes, freight embargoes, unusually severe weather, or delays of Subcontractors or Materialmen arising from unforeseeable causes beyond the control and without the fault or negligence of both Contractor and such Subcontractors or Materialmen; provided, that Contractor shall have used its best efforts and diligently sought to have minimized any such period of delay, by taking whatever measures are necessary, including without limitation, if applicable, seeking alternate sources of Materials, other Subcontractors or other facilities in which to perform the required construction operations; and provided, further, that an application is made pursuant to the requirements of the immediately preceding paragraph.

ARTICLE 4 - CONTRACT PRICE

For the performance and completion of the Work, BPCA shall pay Contractor a lump sum amount of $_____, (such sum is herein sometimes referred to as the "Contract Price"), which amount shall include any monies earned by or paid to Contractor prior to the execution of this Agreement, provided, that if the Contract Price shall be expressly revised by a Change Order in accordance with Article 9 hereof, the Contract Price shall thereafter mean the Contract Price as so revised. Contractor will submit appropriate Time Sheets in the form of Exhibit [x].

ARTICLE 5 - METHOD, SCHEDULE AND TERMS OF PAYMENTS

5.1 Partial Payment

(a) In accordance with Requisitions (as defined in Section 5.2) submitted and approved as provided below for Work performed in accordance with this Agreement, Contractor shall be entitled to partial payment on account of the Contract Price in an amount equal to the value, as determined in accordance with the Trade Payment Breakdown (as defined in Section 5.3), of the portions of the Work completed and acceptable to BPCA and Construction Manager for purposes of such payment, less a retainage equal to ten percent (10%) of the total amount of all prior partial payments. Partial payments shall constitute advances against the Contract Price until final payment is made and accepted. No partial payment made, nor approval of a portion of the Work given for purposes of making a partial payment, shall constitute an acceptance of any Work not in accordance with the Contract Documents.

(b) Upon completion of fifty percent of the Work, Contractor may make written application to BPCA requesting reduction of the retainage set forth in Section 5.1(a) hereof. Approval of such reduction of retainage and the percentage to which the retainage shall be reduced is in the sole discretion of BPCA. If BPCA approves a reduction of retainage as herein described, BPCA shall so notify Contractor in writing. Any reduction of retainage pursuant to this paragraph (b) shall not be deemed to be a waiver of retainage requirements for future partial payments.

5.2 Requisitions

Applications for partial payments ("Requisitions") and application for final payment ("Final Requisition") shall be in the form previously supplied by BPCA and shall be submitted by Contractor to Construction Manager or its designee in five original copies in the manner hereinafter provided for the approval of BPCA and Construction Manager. Each Requisition shall be supported by such data substantiating Contractor's right to payment as BPCA and Construction Manager may require.

5.3 Trade Payment Breakdown

Prior to the submission of the first Requisition, Contractor shall present to Construction Manager for approval a trade payment breakdown (the "Trade Payment Breakdown") of the various portions of the Work, aggregating the Contract Price, prepared in such form as specified by BPCA and supported by such data to substantiate its correctness as Construction Manager may require. After approval by BPCA and Construction Manager, the Trade Payment Breakdown shall not be changed or revised in any way without the written consent of Construction Manager. The Trade Payment Breakdown, when approved by Construction Manager, shall be used only as a basis for Requisitions and shall not be considered as a basis for reducing or increasing the Contract Price.

5.4 Payment for Stored Materials

If approved in advance of delivery by BPCA and Construction Manager, payments will be made on account of 80% of the value of Materials not incorporated in the Work, but delivered and suitably stored at the Site or at some other offsite location agreed upon in writing by BPCA and Construction Manager. Such payments shall be conditioned upon submission by Contractor of bills of sale or other supporting documentation satisfactory to BPCA and Construction Manager to establish BPCA's title to such Materials including applicable insurance and transportation to the Site for those Materials stored offsite. In the event that Contractor, with approval of BPCA, stores any Materials offsite, the conditions for payment of Material stored off-site shall include but not be limited to the following: (a) the Material shall be properly stored in a secured location approved by the BPCA and/or Construction Manager; (b) the Material will be covered under the BPCA's builder's risk policy subject to policy limits and restrictions; and (c) the Material may be inspected by the BPCA and /or Construction Manager to assure compliance with Contract Documents.

5.5 Receipts and Releases of Liens

With each Requisition, Contractor shall furnish its affidavit of payment and waiver of lien for Work done and Materials furnished through the date covered by the last preceding partial payment (the "Preceding Covered Date") and shall furnish its affidavit certifying that all Subcontractors and Materialmen have been paid for Work performed and Materials furnished through the Preceding Covered Date except for any permitted retainage. BPCA may also require Contractor to attach to each Requisition (i) affidavits of payment and waivers of lien from all Subcontractors and Materialmen dealing directly or indirectly with Contractor for Work performed and Materials furnished through the Preceding Covered Date and/or (ii) the consent of the surety issuing the Payment Bond to such payment. BPCA may require Contractor to execute a waiver of lien at the time payment is made for a Requisition for all Work performed through the date of the Requisition in respect of which payment is being made.

In addition to the documents required to be furnished by the preceding paragraph, with the Final Requisition, Contractor shall furnish (y) its affidavit that there are no liens, claims or demands by, and that there is no indebtedness to, Subcontractors, Materialmen, laborers, other employees or third persons for which BPCA, Construction Manager, or Architect might in any way be responsible and (z) releases from all Subcontractors and Materialmen dealing directly or indirectly with Contractor. Should any such Subcontractor or Materialman fail or refuse to furnish such release, Contractor may be required to furnish a bond satisfactory to BPCA to indemnify it against any such lien, claim or demand. If any such lien, claim or demand remains unsatisfied after all payments are made to Contractor, Contractor shall refund to BPCA all monies that BPCA may be compelled to pay in discharging such lien, claim or demand including all costs, expenses and attorneys' fees which BPCA may incur in connection therewith.

5.6 Time of Payment

Requisitions shall be submitted by Contractor to BPCA and Construction Manager by the seventh day of each calendar month for Work completed up to the last calendar day of the previous month or other day approved by BPCA, and payment shall be made on or about twenty days after BPCA receives the Requisition together with the documents required pursuant to Sections 5.2 and 5.5 hereof. Contractor shall be entitled to payment only in the amount approved by BPCA, and Construction Manager with respect to such Requisitions, each of which must be signed by BPCA, and Construction Manager before payment is made. The value of any Work included in a Requisition for partial payment which is found unacceptable by BPCA, or Construction Manager may be deducted from that or any subsequent Requisition.

5.7 Reduction of Retainage

Upon the issuance of a Certificate of Substantial Completion, as defined in Section 8.6, Contractor shall submit a Requisition in an amount equal to the Contract Price less five percent (5%) of the total contract amount (including all approved change orders and pending change order proposals), and less the total amount of all prior payments. Upon approval of the same by BPCA, BPCA shall pay to Contractor the amount approved less any amount which BPCA is entitled to withhold hereunder.

5.8 Final Payment

(a) The final balance due Contractor under this Agreement shall be payable to Contractor by BPCA, as final payment hereunder, within thirty days after all of the following have taken place:

(1) Contractor's Final Requisition has been submitted by Contractor and approved by BPCA, and Construction Manager;

(2) the affidavit provided for in Section 5.5 hereof has been submitted by Contractor, and any other documents or actions expressly specified in the Contract Documents as preconditions to final payment have been submitted or completed; and

(3) any inspections or approvals with respect to any of the Work that BPCA deems legally required or appropriate by governmental authorities or by the applicable Board of Fire Underwriters have been performed or obtained.

(b) The acceptance of final payment shall constitute a waiver of all claims by Contractor.

5.9 Release and Consent of Surety

Notwithstanding any other provision of this Agreement, before final payment pursuant to Section 5.8 shall become due pursuant hereto or before reduction of retainage, Contractor shall submit to BPCA a consent of surety to final payment or reduction of retainage in a form and substance acceptable to BPCA.

5.10 BPCA's Right to Audit and Inspect Records

Contractor shall maintain and shall keep for a period of at least six years after the date of Final Acceptance of the Work, pursuant to Section 8.7, all records and other data relating to the Work. BPCA or its designee shall have the right to inspect and audit all records and other data of Contractor relating to the Work at any time and from time to time until the end of such six year period. Contractor shall promptly respond to any inquiries of BPCA or any representative of BPCA arising out of any such inspection or audit.

5.11 Withholding of Payments

(a) BPCA may withhold payment or, because of subsequently discovered evidence, may nullify the whole or any part of any previously approved Requisition to such extent as may, in the judgment of BPCA, be necessary:

(1) to assure payment of just claims or liens of any persons supplying labor or Materials for the Work;

(2) to protect BPCA from loss due to defective Work or to reimburse BPCA, Construction Manager and Architect for fines on account of non-compliance with applicable laws, rules and regulations, including rules promulgated by the Office of Safety & Health Administration;

(3) to protect BPCA from loss due to death or injury to persons or damage to the Work or property of BPCA, other contractors or others caused by the act or neglect of the Contractor;

(4) in the event that there is reasonable evidence that the Work will not be completed for the unpaid balance of the Contract Price;

(5) in the event that there is reasonable evidence that the Work will not be completed within the time provided; or

(6) in the event that Contractor persistently fails to perform the Work in accordance with the Contract Documents.

In any of such events, BPCA shall have the right to apply any such amounts so withheld in such manner as BPCA may deem proper to satisfy such claims, to secure such protection, to complete the Work or to compensate BPCA for any loss suffered by reason of Contractor's delay. Such application shall be deemed payment for the account of Contractor. In the event that BPCA gives Contractor notice that it intends to make such application, Contractor shall be estopped from disputing liability or the amount of liability unless, within three days after receipt of such notice, it indicates to BPCA in writing that it is not liable or that the amount of its liability is different from that set forth in the notice.

(b) The provisions of this Section 5.11 are solely for the benefit of BPCA, and any action or non-action by BPCA shall not give rise to any liability on the part of BPCA. Failure to

so act shall not be deemed a waiver of any present or future claims of BPCA.

ARTICLE 6 – CONTRACTOR

6.1 Superintendence by Contractor, Discipline and Employee Skills

Contractor shall provide a competent construction superintendent to be in charge of the Work. The construction superintendent shall devote full time to the Work, shall be present at the Site during the time the Work is required to be performed and shall have full authority to accept instructions, make decisions and act for Contractor at all times. If at any time the construction superintendent is not satisfactory to BPCA or Construction Manager, Contractor shall, if requested by BPCA, replace such superintendent with another satisfactory to BPCA. Contractor shall enforce strict discipline and good order at all times among Contractor's employees and all Subcontractors. Contractor shall not engage any employee not skilled in the task assigned.

6.2 Representations and Warranties

Contractor represents and warrants that:

(a) Contractor is financially solvent and is experienced in, and competent to perform the Work and has the staff, manpower, equipment, Subcontractor, and suppliers available to complete the Work within the time specified in the Agreement for the Contract Price;

(b) Contractor is familiar with all Federal, State or other laws, ordinances, orders, rules and regulations, which may in any way affect the Work;

(c) any temporary and permanent Work required by this Agreement can be satisfactorily constructed, and such construction will not injure any person or damage any property; and

(d) Contractor has carefully examined the Contract Documents and the Site and, from Contractor's own investigations, is satisfied as to the nature and location of the Work, the character, quality and quantity of surface and subsurface materials likely to be encountered, the character of equipment and other facilities needed for the performance of the Work, the general and local conditions, and all other conditions or items which may affect the Work. Prior to submitting its bid for performance of the Work, Contractor notified BPCA or Construction Manager in writing of any discrepancies or errors in the Contract Documents.

6.3 Verifying Dimensions and Site Conditions

Before proceeding with the Work, Contractor will check all previous and surrounding work and determine the correctness of the same; failure on its part to detect or report discrepancies will relieve BPCA of liability from any and all claims to recover cost, expense, loss or damage resulting therefrom. Contractor shall take, determine, investigate and verify all field measurements, dimensions, field construction criteria and Site conditions for the performance of the Work and shall check and coordinate the information contained in the Contract Documents and the boring logs which shall be available for inspection with the requirements of the Work. Contractor shall be responsible for determining the exact location of and to verify the spatial relationships of all Work. If any conflicts or discrepancies are found in the Contract Documents or if Contractor has any questions concerning the foregoing, it shall immediately notify Construction Manager and shall thereafter perform the Work in accordance with the directions of Construction Manager.

6.4 Copies of Contract Documents for Contractor

BPCA shall furnish to Contractor, without charge, two sets of the Contract Documents. Any sets in excess of the number mentioned above may be furnished to Contractor at the cost of reproduction and mailing.

6.5 Meetings

Contractor shall attend all meetings as directed by BPCA or Construction Manager, including meetings set forth in Section 26.3, and shall be represented at such meetings by a person having knowledge of the Work and authorized to act for Contractor at all times. If at any time such person is not satisfactory to BPCA or Construction Manager, Contractor shall, if requested by BPCA, be represented by another person satisfactory to BPCA, having knowledge of the Work and authorized to act for Contractor at all times.

6.6 Related Work

Contractor shall examine the Contract Documents for related work to ascertain the relationship of such work to the Work under the Contract Documents.

6.7 Surveys and Layout

Unless otherwise expressly provided in this Agreement, Owner shall furnish Contractor survey points necessary for the Work, but Contractor shall lay out the Work.

6.8 Reports and Access

Contractor shall furnish BPCA and Construction Manager with daily and monthly manpower reports on forms provided by BPCA or Construction Manager and such other reports as may be required by BPCA or Construction Manager. BPCA, Construction Manager and Architect shall have full and free access to the shops, plants and factories of Contractor, any Materialmen and Subcontractors to inform themselves as to the progress of the Work.

6.9 Financial Information

Until completion of the Work, Contractor agrees to notify BPCA forthwith in writing of any event which has caused or is reasonably anticipated to cause a material adverse change in Contractor's business or financial condition from that shown in the then most recent financial statements furnished by Contractor to BPCA. Contractor has furnished to BPCA financial statements regarding the period from [date] to [date]. Contractor agrees to furnish to BPCA, at BPCA's request from time to time hereafter, quarterly, or annual financial statements (which shall be audited, if such is the practice of Contractor for financial statements covering the applicable period) and such additional information as BPCA shall deem necessary or desirable to satisfy itself of Contractor's continuing ability to complete the Work.

ARTICLE 7 - CONTRACT ADMINISTRATION

7.1 Architect's Responsibilities and Functions

Contractor acknowledges that the role of Architect with respect to the Work shall be as specified in this Agreement. Contractor will comply with the instructions of Architect pursuant hereto.

Architect's duties and services shall in no way supersede or dilute Contractor's obligation to perform and complete the Work in conformity with the Contract Documents.

7.2 Construction Manager's Responsibilities and Functions

(a) Construction Manager shall coordinate and schedule construction to insure that the completion of the Project is on schedule and that the Project is well constructed in accordance with the Contract Documents. Contractor acknowledges that the role of Construction

Manager with respect to the Work shall be as specified in this Agreement. Contractor hereby agrees to comply with the directions and instructions of Construction Manager.

(b) Construction Manager shall call for meetings of Contractor, other contractors, Subcontractors and Materialmen as necessary for the proper coordination of the Work. Such meetings shall be held at the Site on regular working days, during regular working hours, unless otherwise directed by BPCA. Attendance shall be mandatory for all parties notified to attend.

7.3 Scope of Responsibility of Architect and Construction Manager

In no event shall any act or omission on the part of the Construction Manager or Architect relieve Contractor of its obligation to perform the Work in full compliance with the Contract Documents. Neither Architect nor Construction Manager will be responsible for construction means, methods, techniques, sequences or procedures, or for safety precautions and programs in connection with the Work, and neither will be responsible for Contractor's failure to carry out the Work in accordance with the Contract Documents or the failure to fulfill any of the requirements of this Agreement.

ARTICLE 8 - INSPECTION AND ACCEPTANCE

8.1 Access to the Work

BPCA, Construction Manager, Architect or their authorized representatives shall at all times have access to and the right to observe the Work and all facilities where the Work or any part thereof is being fabricated or stored, and Contractor shall provide proper facilities for such access and observation.

8.2 Notice of Required Inspections and Tests

If the Contract Documents, or any laws, rules, ordinances or regulations, require that any Work be inspected or tested, Contractor shall give BPCA, Construction Manager and Architect at least five days prior written notice of readiness of the Work for inspection or testing and the date fixed for such inspection or testing.

8.3 Additional Inspections and Tests

(a) Whenever, in the opinion of BPCA, Construction Manager or Architect, it is desirable to require inspection or testing of the Work or its individual components in addition to any such testing which may be originally included in the Work, they shall have authority to do so whether or not such Work be then fabricated, installed, covered or completed. If such inspection or testing reveals a failure of the Work to comply (1) with the requirements of the Contract Documents, or (2) with respect to the performance of the Work, with laws, ordinances, rules, regulations or orders of any public authority having jurisdiction, Contractor shall bear all costs thereof, including Architect's and Construction Manager's additional services made necessary by such failure; otherwise BPCA shall bear such costs, and an appropriate Change Order shall be issued.

(b) In the event that any item of the Work fails inspection or testing, BPCA, Architect or Construction Manager may require inspection or testing of any or all of the other items of the Work at Contractor's cost and expense.

8.4 Uncovering of Work

(a) If any Work shall be covered or concealed contrary to the request of BPCA, Architect or Construction Manager, such Work shall, if required by BPCA, Architect or Construction Manager, be uncovered by examination, inspection or testing. Any examination, testing or inspection shall not relieve Contractor of the responsibility to maintain quality control over the Work. If any test results are below specified minimums, BPCA may order additional testing. The cost of such additional examination, inspection or testing, any additional professional services required, and any other expenses incurred by BPCA as a result of such

examination, inspection or testing shall be borne by Contractor.

(b) In the event that a typical detail fails inspection or testing, BPCA, Architect or Construction Manager may require inspection or testing of any or all of other such typical details at Contractor's cost and expense.

8.5 Correction of Work

Any Work not approved by BPCA, Architect and Construction Manager shall immediately be reconstructed, made good, replaced or corrected by Contractor including all Work of other contractors destroyed or damaged by such removal or replacement. Rejected material shall be removed immediately from the Site. Acceptance of Materials and workmanship by BPCA shall not relieve Contractor from Contractor's obligation to replace all Work which is not in full compliance with the Contract Documents.

8.6 Certificate of Substantial Completion

Upon their receipt of written notice from Contractor stating that in Contractor's estimation the Work has been substantially performed in conformity with the Contract Documents, Architect and/or Construction Manager shall perform an inspection for the purposes of determining whether the Work has been so performed, commencing such inspection within ten (10) days of receipt of such notice and completing it with all due diligence. When Architect and/or Construction Manager find upon inspection that, to the best of their knowledge and belief, the Work is so performed, they shall prepare and deliver to BPCA for delivery to Contractor a certificate specifying the date of substantial completion of the Work for purposes of this Agreement ("Certificate of Substantial Completion") and a punch list of items of Work remaining to be completed prior to the completion of the Work.

The delivery of a Certificate of Substantial Completion shall not terminate or alter Contractor's obligation under this Agreement to complete the Work in conformity with the Contract Documents and to fulfill all terms and conditions of this Agreement.

8.7 Completion of Work and Acceptance

Upon their receipt of written notice from Contractor stating its belief that the Work has been fully performed in conformity with the Contract Documents, and confirming that Contractor has completed any items of Work previously noted to it by Architect and Construction Manager as not having been acceptably completed in any punch list or otherwise, Architect and Construction Manager shall perform an inspection for purposes of determining whether the Work has been so performed. Architect and Construction Manager shall commence such inspection within ten (10) days of receipt of such notice and shall pursue and complete it with all due diligence. When BPCA and Construction Manager find upon inspection that, to the best of their knowledge and belief, the Work has been so performed, they shall prepare a certificate of final completion, and, upon delivery by BPCA to Contractor of said certificate, the Work shall be deemed to be finally accepted by BPCA (such delivery of the certificate of final completion to Contractor is hereinafter referred to as "Final Acceptance").

Final Acceptance shall not terminate or alter Contractor's obligation under this Agreement to complete the Work in conformity with the Contract Documents and to fulfill all terms and conditions of this Agreement.

ARTICLE 9 - CHANGES IN THE WORK

9.1 Change Orders

(a) BPCA may, at any time, in any quantity or amount, without notice to the sureties and without invalidating or abandoning the contract, order Extra Work. Notwithstanding the terms of subsection 3.1(a) hereof, BPCA may, but shall be under no obligation to, change the manner, sequence or method of performance of the Work or direct acceleration of the Work and Contractor shall, therefor, be entitled to a Change Order (as defined in Section 9.1(b)) provided that such change or acceleration was not ordered to maintain the Progress Schedule for the

Project, the Progress Schedule for the Work or to coordinate the Work with the work of other contractors. Contractor shall be obligated to perform changed Work promptly in conformity with any Change Order or Field Order issued in accordance herewith and may not suspend or otherwise refuse to perform the Work contained therein or any other aspect of the Work required under this Agreement because a Change Order has yet to be fully executed.

(b) "Change Order" shall mean a written order issued by the Authority to Contractor after execution of this Agreement, authorizing or requiring:

(i) Extra Work,

(ii) items which were erroneously deleted or omitted from the Work,

(iii) items which were included in the Work but were subsequently deleted,

(iv) an extension or decrease of time to complete Work,

(v) an increase or reduction in the payment to Contractor, or

(vi) any other change in the Contract Documents or in the sequence of performing or phasing of the Work.

(c) All Change Orders shall be prepared, signed and issued by Construction Manager at the instruction of BPCA, and to be valid, must be countersigned by BPCA and Contractor.

9.2 Change in Contract Price and Time

(a) The Contract Price will not be revised due to any change of the Work except as and to the extent expressly provided in the Change Orders. The amount by which the Contract Price is to be increased or decreased by any Change Order shall be determined by BPCA and Construction Manager by one or more of the following methods:

(1) by accepting an amount agreed upon by BPCA and Contractor;

(2) by applying the applicable unit prices and alternates where the Work involved is covered by unit prices in this Agreement;

(3) by receiving from Contractor a detailed breakdown satisfactory to BPCA and Construction Manager, including actual time slips and invoices, itemizing the direct cost of labor and Materials to perform the changed Work and adding thereto fifteen percent (15%) to cover profit and all indirect and overhead costs, except that where the changed Work is performed by a Subcontractor or Materialman, the direct cost of labor and Materials to perform the changed Work plus fifteen percent (15%) for profit and all indirect and overhead costs to Subcontractor or Materialman and an additional sum for profit and all indirect and overhead costs of Contractor equal to ten percent (10%) of the first $100,000, five percent (5%) of the second $100,000 and three percent (3%) of any cost in excess of $200,000 to Contractor. No allowance shall be paid on the premium portion of overtime pay. Where the changed Work involves both an increase and a reduction in any contract Work, the above percentage override shall be applied only on the amount, if any, by which the cost of the increase exceeds the cost of the reduction.

(4) by receiving from Contractor a true copy of its bid work sheets to determine the contract price for the elimination of any contract Work. The amount of reduction shall not include the overhead or profit of Contractor for the eliminated Work. Should Contractor fail to furnish BPCA with such bid work sheets, then Construction Manager shall determine the amount of the reduction. The determination of Construction Manager shall be final and binding unless erroneously or fraudulently arrived at, or arbitrary and capricious;

(5) by adding to the Contract Price only the amount of the premium portion of overtime pay resulting from an acceleration of the Work; or

(6) by adding to the Contract Price, the actual incremental labor and equipment costs incurred by the Contractor resulting from a change in the manner, sequence or method of performing the Work.

(b) The compensation specified in a Change Order shall constitute a release and full payment for the Extra Work covered thereby and for any delay and disruption cost or expense occasioned by reason of said change in the Work.

(c) No time extension shall be granted Contractor by reason of the issuance of any Change Order unless it is expressly stated therein.

9.3 Field Orders

Construction Manager shall have the authority to order minor changes in the Work by the issuance of written field orders ("Field Orders"), which may be issued without prior approval by BPCA. Field Orders must be countersigned by Contractor. Minor changes in the Work for purposes of this Section shall mean only changes which do not necessitate or warrant any revision in the Contract Price in excess of $5,000 or affect the time of performance of Contractor's Work, any change in the basic character or design of the Project, or deviation from design standards established for the Project. Except as otherwise provided in the preceding sentence relating to an increase in the Contract Price, no claim for an increase in the Contract Price may be based upon any Field Order. If Contractor, on receipt of a Field Order, claims that the change of Work involved necessitates a Change Order, it shall proceed in accordance with the Field Order under protest and notify BPCA immediately of its claim for additional compensation for Extra Work pursuant to Article 14.

9.4 Changed Conditions

(a) BPCA assumes no responsibility for the correctness of any boring or other subsurface information and makes no representation of any kind regarding subsurface conditions and test borings, reports, rock cores, foundation investigation and topographical maps which may be made available to Contractor.

(b) Contractor shall promptly, and before such conditions are disturbed, notify Construction Manager of: (1) subsurface or latent physical conditions differing materially from those indicated in the Contract Documents, or (2) unknown physical conditions of an unusual nature, differing materially from those ordinarily encountered and generally recognized as inherent in work of the character provided for in this Agreement. Construction Manager shall promptly investigate the conditions, and if it finds that such conditions do materially so differ and cause an increase or decrease in Contractor's cost of, or the time required for, performance of any part of the Work under this Agreement, Contractor shall be paid in the manner provided for payment with respect to any Change Order and receive, if warranted, a time extension.

(b) No claim of Contractor under this clause shall be allowed unless Contractor has given the notice required in subsection (a) above.

ARTICLE 10 - SUBCONTRACTS AND PURCHASE ORDERS

10.1 Selection of Subcontractors and Materialmen and Approval of Subcontracts and Purchase Orders

(a) Contractor shall submit to Construction Manager, within 21 calendar days of Notice to Proceed, the names of all persons with whom it has contracted or intends to contract or hereafter contracts with respect to the Work.

(b) Except as specifically provided herein, Contractor shall not enter into any Subcontracts or issue any Purchase Orders (as hereinafter defined) to any Materialmen in

connection with the performance of Contractor's obligations hereunder without the prior written consent of BPCA to the use of each such Subcontractor or Materialman, and to the agreement to be entered into between Contractor and any such Subcontractor or Materialman. Contractor shall inform BPCA in writing of any interest it may have in a proposed Subcontractor or Materialman. No such consent by BPCA, or employment, contract, or use by Contractor, shall relieve Contractor of any of its obligations hereunder nor may BPCA be held responsible in any way for the performance of a Subcontractor or Materialman to whom BPCA gave its consent.

(c) Contractor shall be responsible for the performance of the Work of any Subcontractors or Materialmen engaged, including the maintenance of schedules, coordination of their Work and resolutions of all differences between or among Contractor and any Subcontractors. It is expressly understood and agreed that any and all Subcontractors or Materialmen engaged by Contractor hereunder shall at all times be deemed engaged by Contractor and not by BPCA.

(d) Upon the request of BPCA, Contractor shall cause any Subcontractor or Materialman employed by the Contractor in connection with this Agreement to execute a copy of the Agreement wherein such Subcontractor or Materialman shall acknowledge that it has read and is fully familiar with the terms and provisions hereof and agrees to be bound thereby as such terms and provisions are or may be applicable to such Subcontractors or Materialmen.

(e) Contractor shall submit to BPCA promptly following execution, three copies of every revision, amendment, modification or cancellation executed or issued by Contractor with respect to any Subcontractor or Materialman. BPCA is not obligated to make payment on account of Work performed or Materials furnished by a Subcontractor or a Materialman under a Subcontract or contract for construction supplies or Materials (hereinafter "Purchase Order(s)") unless there shall have been filed with BPCA prior to the submission of a Requisition for each payment, three copies of such Subcontract or Purchase Order containing the provisions required by this Agreement to be contained therein, except as may otherwise be specified by BPCA with respect to Purchase Orders for minor purchases.

10.2 Access by BPCA and Others

Contractor shall include a provision in all Subcontracts and Purchase Orders stating that, to permit verification of Contractor's costs, BPCA shall have the right to have its representatives inspect and audit the books of account and records of the Subcontractor and Materialmen, including the right to make excerpts from such books and records. All payments by Contractor to a Subcontractor or Materialman shall be by check specifically indicating that payment is attributable to this Agreement and identifying the invoice(s) for which payment is being made. Contractor shall include a provision in all Subcontracts and Purchase Orders that will enable representatives of the State of New York, Construction Manager and BPCA, as the case may be, to obtain access during working hours to the appropriate books of account and records of the Subcontractors or Materialmen relating to the Work to determine if there is compliance with the requirements of law or this Agreement.

10.3 Retainage

Contractor may provide for a retainage under any of its Subcontracts or Purchase Orders provided that where a Subcontract or Purchase Order provides for a retainage, the retainage shall be no greater in percentage than that provided for under Sections 5.1 or 5.7 hereof with respect to Contractor itself, unless otherwise approved in writing by BPCA. Contractor shall submit with each Requisition a statement setting forth the amounts of all retainage, if any, under its Subcontracts and Purchase Orders.

10.4 Miscellaneous

(a) Contractor shall be fully responsible for the work, acts and omissions of Subcontractors and Materialmen, and of persons either directly or indirectly employed by Subcontractors and Materialmen.

(b) Contractor's use of Subcontractors and Materialmen shall not diminish Contractor's obligation to complete the Work in accordance with the Contract Documents.

Contractor shall control and coordinate the work of Subcontractors and Materialmen.

(c) Nothing contained in this Agreement shall create any contractual relationship between Subcontractors or Materialmen and BPCA, Construction Manager or Architect. Nothing in this Section shall obligate BPCA to pay or to see to the payment of any sums to any Subcontractor or Materialmen.

(d) Contractor shall include a provision in all Subcontracts and Purchase Orders exceeding $50,000, requiring the Subcontractor or Materialman, if requested by BPCA, until the Subcontractor or Materialman finishes its portion of the Work, to deliver to Contractor unaudited and, if available, audited financial statements of the Subcontractor or Materialman similar to the obligation of Contractor under Section 6.8 and promptly upon receipt thereof Contractor shall deliver copies thereof to BPCA.

ARTICLE 11 - ASSIGNMENT

11.1 No Assignment of Duties

Contractor shall not assign this Agreement or the performance of any obligations of Contractor under this Agreement, nor enter into any Subcontract in respect of the Work or any part thereof except in compliance with Article 10 hereof and with the prior written consent of BPCA, and each and every such assignment, Purchase Order and Subcontract without such compliance and consent shall be void and shall revoke and annul this Agreement.

11.2 No Assignment of Monies

Contractor shall not assign any monies payable hereunder nor execute and deliver any order for payment unless Contractor and the assignee shall have complied with the following terms and conditions:

(a) the assignee shall be a commercial bank or finance company regularly engaged in the business of provided financing to construction contractors and shall be providing such financing to Contractor;

(b) the assignee shall, simultaneously with the assignment, execute and deliver to BPCA an undertaking, in favor of BPCA, in form and substance satisfactory to BPCA, providing that:

(1) assignee will cause Contractor to apply for trust purposes, as defined in New York Lien Law Article 3-A (the “Lien Law”), all funds advanced by assignee to Contractor;

(2) assignee will file a copy of the assignment, containing the covenant required by the Lien Law, with the County Clerk of New York County and the head of the agency having charge of the underlying project;

(c) the assignee shall agree with BPCA in writing that BPCA and Contractor may modify any of the terms of this Agreement, including any of the terms of payment, without the consent of assignee;

(d) the assignee shall agree with BPCA in writing that after the effective date of the assignment, BPCA may make payment directly to any Subcontractor or Materialman without any liability to the assignee;

(e) the assignee shall agree with BPCA in writing that the assignee shall require and cause Contractor to keep his books and records in the form and manner described in New York Consolidated Laws Service Lien Law Article 3-A Section 75; and

(f) the assignee shall agree with BPCA in writing that the assignee will indemnify and hold BPCA harmless from and against any loss, claim or expense incurred as a result of any

failure of performance in accordance with the terms of such undertaking.

11.3 Assignment by BPCA

This Agreement or any rights of BPCA under this Agreement, including any guaranties or warranties of workmanship or material, may at any time be assigned by BPCA to the State of New York or any political subdivision, public corporation or agency of the State.

ARTICLE 12 - MECHANICS' LIENS AND CLAIMS

If any mechanic's lien or other claim shall be filed for or on account of the Work, Contractor shall discharge such lien or claim within thirty days of receiving written notice of such lien or other claim.

ARTICLE 13 – INSURANCE AND CONTRACT SECURITY

13.1 Insurance

(a) Contractor shall procure and maintain all of the insurance required under this Article 13 until Final Acceptance of the Work, except with respect to Completed Operations Coverage, as described in 13.1(f)(3) below.

(b) Contractor shall not commence physical performance of the Work at the Site until Contractor has obtained, and required each Subcontractor to obtain, all the insurance required under this Article and until it has furnished to BPCA the certificate or certificates of insurance required by Section 13.1(c) hereof.

(c) Contractor shall furnish to BPCA, before or upon execution of this Agreement, attention: [name], a certificate or certificates of the insurance required under this Article and, upon BPCA's request, certified copies of the original policies of insurance, within the time period required by BPCA and before commencing physical performance of the Work at the Site. Such certificate or certificates shall be in form satisfactory to BPCA, shall list the various coverages and shall contain, in addition to any other provisions required hereby, a provision that the policy shall not be changed, canceled or reduced and that it shall be automatically renewed upon expiration and continued in force until two years after Final Acceptance unless BPCA is given 90 days' written notice to the contrary. Such policies and certificates should name as additional insureds BPCA, Battery Park City Parks Conservancy Corporation (the "Conservancy"), the State of New York, Construction Manager, and Architect.

(d) All insurance required to be procured and maintained must be procured from insurance companies which have a financial rating by A.M. Best Company as published in the most current key rating guide of "A-X" or better and which are authorized to do business in the State of New York.

(e) If at any time any of the required insurance policies should be canceled, terminated or modified so that insurance is not in effect as required, then, if BPCA shall so direct, Contractor shall suspend performance of the Work. If the Work is not suspended then BPCA may, at BPCA's option, obtain insurance affording coverage equal to that required, the cost of such insurance to be payable by Contractor to BPCA.

(f) Contractor and each Subcontractor shall secure in a form satisfactory to BPCA:

(1) Worker's Compensation and Employer's Liability Insurance, including United States Longshoreman & Harbor Workers ("USL & H ") and Jones Act Coverages, during the Term for the benefit of such employees as are required to be insured by the applicable provisions of law and voluntary compensation for employees excluded from statutory benefits. Employer's Liability Insurance and benefits resulting from disease shall

not be less than an annual aggregate amount of $_____ for each consecutive 12-month period.

(2) Disability Benefit Insurance during the life of this Agreement for the benefit of such employees as are required to be insured by the applicable provisions of law.

(3) Commercial General Liability Insurance as follows:

Standard commercial general liability insurance policy with contractual, products and completed operations and explosion, blasting, collapse, excavation and underground damage liability coverages, under the occurrence policy format, issued to and covering the liability of Contractor for all the Work and operations relating thereto and all obligations assumed by Contractor under this Agreement including, but not limited to indemnity obligations in an amount which shall not be less than the following limits:

Combined Single Limits, Bodily Injury
and Property Damage Liability

$_____ per each occurrence and $_____ in the aggregate.

The completed operations coverage shall continue in force until three years after Final Acceptance of the Work and shall contain, in addition to any other provisions required hereby, a provision that the policy shall not be changed, canceled or reduced. As a condition precedent to the making of Final Payment, Contractor shall furnish BPCA with a certified copy of the completed operations policy.

(4) Automobile Liability Insurance as follows:

A policy covering the use in connection with the Work of all owned, non-owned and hired vehicles bearing license plates, or under the circumstances that such vehicles are being used they are required by the Motor Vehicle Laws of the State of New York to bear license plates. The coverage under such policy shall not be less than the following limits:

Combined Single Limits,
Bodily Injury and Property Damage Liability

$_____ per each occurrence.

(5) Marine Protection and Indemnity ("P&I") insurance of not less than [amount] per occurrence, if Contractor or any of its Subcontractors utilizes floating equipment, barges or floats, or performs marine-related construction, covering any and all claims for personal injury, death and property damage arising out of or in connection with this Agreement.

(6) Pollution Liability Insurance, on an occurrence basis, providing coverage for bodily injury liability, property damage or environmental damage caused by pollution conditions with a limit of liability of not less than [amount] per occurrence and in the aggregate. The policy shall include coverage for environmental clean-up on land, in air and on water. The policy shall include coverage for completed operations for two (2) years after the completion of the performance of the Work, gradual and sudden and accidental pollution coverage, with a time element of no less than seven (7) days' notice and thirty (30) days' reporting. The policy shall not contain a sunset provision, or any other provision, which would prohibit the reporting of a claim and the subsequent defense and indemnity that would normally be provided by the policy. The policy shall provide

transportation coverage for the hauling of hazardous materials from the Project Site to the final disposition location.

(7) Vessel Pollution Liability Insurance, on an occurrence basis, providing coverage for bodily injury liability, property damage or environmental damage caused by pollution conditions, emanating from any floating equipment, barges or floats, utilized by Contractor or Subcontractors in the performance of Marine related construction, with a limit of liability of not less than [amount] per occurrence and in the aggregate. The policy shall include coverage for environmental clean-up on land, in air and on water.

(8) Umbrella Liability Insurance, excess of general liability, automobile liability, Protection and Indemnity ("Marine Liability"), vessel pollution and Employer's Liability, in an amount of not less than [amount].

(g) The insurance required under subsections 13.1(f)3, 4 and 5 shall be of a type which shall protect Contractor and Subcontractors, respectively, against damage claims which may arise from operations under this Agreement, whether such operations be by the insured or by anyone directly or indirectly employed by the insured. Each of the aforesaid policies shall provide that the insurance company or an attorney approved and retained by the insurance company shall defend any suit or proceeding against BPCA or any officers, agents or employees of BPCA whether or not such suit is groundless, false or fraudulent. Notwithstanding the foregoing, BPCA shall have the right to engage its own attorneys for the purpose of defending any suit or proceeding against it or its respective officers, agents or employees, and, in such event, Contractor shall, indemnify BPCA for all attorneys' fees and disbursements and other costs incurred by it arising out of, or incurred in connection with, any such defense. The said insurance shall name BPCA, the Conservancy, the State of New York, Construction Manager and Architect as additional insureds as respects this location and shall, where applicable, be written on an occurrence basis and shall contain a provision that it is primary and that any similar insurance which BPCA, the Conservancy, the State of New York, Construction Manager, Architect, Contractor or Subcontractor elect to carry for their own benefit is secondary or excess and not contributing insurance.

(h) BPCA, at BPCA's cost and expense, may, at its sole option, procure and maintain such insurance as shall in the opinion of BPCA, protect BPCA from contingent liability of BPCA to others for damages arising from bodily injury, including death and property damages which may arise from operations under this Agreement. The procurement and maintenance of such insurance by BPCA shall not in any way be construed or be deemed to relieve Contractor from, or to be a limitation on the nature or extent of, such obligations and risk.

(i) BPCA shall, at all times during the period of construction and until completion and Final Acceptance of the Work procure and maintain at the cost and expense of BPCA "Builders Risk" insurance, or its functional equivalent, against direct physical loss or damage to the Work and on all Materials to be made a part of the Work in the names of BPCA, Construction Manager, Contractor and Subcontractors, said amount of insurance to be procured and maintained on a one hundred percentage (100%) completed value basis on the insurable portion of the Work, which insurance shall contain a deductible provision for all losses except flood and earthquake in the amount of $10,000 and a deductible provision for flood and earthquake in the amount of $10,000. BPCA recognizes that the deductible applicable to flood and earthquake may be greater than $10,000 due to insurance market conditions and shall notify Contractor if such deductible is greater than $10,000. Losses up to and including the amounts of such deductible provisions shall be borne by Contractor. The insurance specified above may, in certain instances, include other parties as named insureds, as the interests of such parties may appear. Loss, if any, is to be made adjustable with and payable to BPCA on behalf and for the named insureds as the interests of such insureds may appear. BPCA shall, in BPCA's sole discretion, have power to adjust and to settle with the insureds any loss or claim under such insurance. The above is not intended to be a complete, full or accurate description of the coverage provided by the policies of insurance, copies of which are on file with BPCA. This subsection (i) is not intended to create or give any rights to Contractor or Subcontractors other than those which may be made available to such Contractors or Subcontractors under the terms of such policies. BPCA assumes no obligation to obtain insurance other than that evidenced by said polices. Contractor and Subcontractors shall not violate or permit to be violated any term or

condition of such policies and shall at all times satisfy the safety requirements of BPCA and of the insurance companies issuing the aforementioned policies. The Contractor shall, upon notification by BPCA, obtain such insurance at BPCA's expense on a date determined by BPCA, which date shall not be less than thirty (30) days after notice to Contractor of such determination by the BPCA.

13.2 Effect of Procurement of Insurance

Neither the procurement nor the maintenance of any type of insurance by BPCA or Contractor shall in any way be construed or be deemed to limit, discharge, waive or release Contractor from any of the obligations and risks impressed upon Contractor by this Agreement or to be a limitation on the nature or extent of such obligations and risks.

13.3 Contract Security

Contractor shall, if it already has not done so, furnish to BPCA, with the execution of this Agreement, to BPCA, a bond in the form annexed hereto as Exhibit [x] in an amount at least equal to one hundred percent (100%) of the Contract Price for performance of the Work (the "Performance Bond"), and a labor and material payment bond in the form annexed hereto as Exhibit [y] in an amount at least equal to one hundred percent (100%) of the Contract Price for the payment of all persons performing labor or providing Materials in connection with the Work (the "Payment Bond"). The surety on said bond shall be a surety company authorized to do business in the State of New York and shall be rated at last B+ by A.M. Best and Company, or meet such other requirements as are acceptable to BPCA.

13.4 Additional or Substitute Bond

If at any time BPCA shall be or shall become dissatisfied with any surety or sureties then obligated upon the Performance Bond or the Payment Bond, or if for any other reason such bonds shall cease to be adequate security to BPCA, Contractor shall within five (5) days after notice from BPCA to do so, substitute an acceptable bond or bonds in such form and sum and signed by such other surety or sureties as may be satisfactory to BPCA, except that the penal sum of said bond shall not exceed the Contract Price as adjusted by Change Orders. No further payments shall be deemed due nor shall be made until the new surety or sureties shall have furnished such an acceptable bond or bonds to BPCA.

ARTICLE 14 - CLAIMS FOR EXTRA WORK

(a) If Contractor is of the opinion that (i) any work which it has been ordered to perform is Extra Work and not Work as set forth in the Contract Documents, (ii) any action or omission of BPCA, Construction Manager or Architect is contrary to the terms and provisions of the Contract Documents and will require the performance of Extra Work or will cause additional expense to Contractor or (iii) any determination, order or directive of BPCA, Construction Manager or Architect is contrary to the terms of the Contract Documents and will require the performance of Extra Work or will cause additional expense to Contractor, Contractor shall:

(1) not suspend Work but promptly comply with each determination, order or directive and proceed diligently with the performance of the Work in accordance with BPCA's instructions,

(2) notify BPCA, Construction Manager and Architect in writing within 72 hours of such determination, order, act or omission that Contractor believes such will require it to perform Extra Work or incur additional expense and the basis for Contractor's conclusion and request a final determination thereon by BPCA, and

(3) present to the Construction Manager for signature daily time and Material tickets to confirm quantities of Material and hours of labor in cases where Contractor is performing the Work which it considers to be Extra Work.

If BPCA determines that (x) work is Work required to be performed hereunder and not Extra Work, (y) action or omission is proper, or (z) a determination, order or directive is proper, Contractor, in order to reserve its right to claim compensation for or damages resulting from the performance of such work or the compliance with such determination, order or directive, must notify BPCA in writing within three (3) working days after receiving notice of BPCA's determination that it is performing such work or complying with such determination, order or directive under protest.

In addition to the foregoing, Contractor must submit to BPCA, Construction Manager and Architect within thirty (30) days after it has performed such work or complied with such determination, order or directive, a detailed statement of the extra expense claimed to have been incurred and of any claimed damages resulting from the performance of such work or the compliance with such determination, order or directive.

(b) No claim for Extra Work shall be allowed unless the same was done pursuant to written order approved in writing by BPCA. Contractor's failure to comply with any provision of this Article:

(1) shall constitute a conclusive and binding determination on the part of Contractor that such action, omission, determination, order or directive does not involve Extra Work, has not caused extra expense or damages to Contractor, and is not contrary to the terms and provisions of the Contract Documents; and

(2) shall constitute an irrevocable waiver by Contractor of any claim for compensation for or damages resulting from the performance of such work or the compliance with such determination, order or directive.

(c) The value of claims for Extra Work, if allowed, shall be determined by the methods described in Section 9.2.

ARTICLE 15 - TERMINATION

15.1 Termination for Cause

(a) If any of the following events shall occur (an "Event of Default") then BPCA or Construction Manager may serve written notice upon Contractor and upon Contractor's surety, if any, terminating this Agreement at a specified date. The notice shall contain the reasons for termination but shall not be effective to terminate this Agreement if Contractor cures all Events of Default stated in the notice prior to the date specified in the notice of termination.

(1) Contractor shall violate any substantial provision of this Agreement, including, without limitation, by failing to maintain the Progress Schedule for the Project or Progress Schedule for the Work then in effect in accordance with, or failing to discharge any of its responsibilities under, Section 3.1(d) hereof, or by failing to indemnify and hold harmless BPCA (as required by Sections 3.1(e), 3.2, 17.5, 21.1, 21.2., 22(c) or any other provision of this Agreement) from and against any and all claims, liabilities, losses, costs or damages arising out of Contractor's performance of, or failure to perform, its obligations under this Agreement in accordance with its terms, or if the Contractor fails to maintain the insurance required by the provisions of Section 13; or

(2) any material adverse change shall take place in the financial condition of the Contractor;

(3) Contractor takes any action which would result in it becoming the subject of any insolvency proceeding. The term "insolvency proceeding" as used herein shall include the filing of a petition for relief under Title 11 of the United States Code by Contractor or the consent, acquiescence or taking

of any action by Contractor, or the filing by or against Contractor of petition or action, looking to or seeking any reorganization, arrangement, composition, readjustment, liquidation, dissolution, or similar relief under any other regulation; or the appointment, with or without the consent of Contractor, of any trustee, custodian, receiver or liquidator of Contractor or of any property or assets of Contractor; or Contractor's making of an assignment for the benefit of creditors or its inability to pay its debts as they become due.

(4) Contractor misrepresented or omitted information in its submission of the Statement of Qualifications of Contractor submitted by Contractor to BPCA in connection with this Agreement; or

(5) Any partner, principal, director, officer or shareholder owning in excess of five percent (5%) of the stock of Contractor shall have been convicted of a felony.

(b) Upon the occurrence of an Event of Default, at BPCA's option exercised by written notice to Contractor, title to any or all of Contractor's Materials, equipment, work product, work in process and dies and tools, whether on the Site or off site, which are necessary or useful in completing the Work shall vest in BPCA and BPCA may take possession of and utilize the same for completion of the Work; provided that title to such items shall revert to Contractor upon effectuation of a cure of the Event of Default prior to the termination of this Agreement. If no cure has been effected, this Agreement has been terminated and BPCA has taken possession of the same, then after BPCA has taken possession and the Work shall have been completed by or on behalf of BPCA, BPCA shall pay to Contractor, in respect to the items for which title has vested in BPCA, an amount equal to the sum of:

(1) the direct costs of Contractor for such Materials and Work in progress, and

(2) the depreciated book value of such tools and dies less, if BPCA elects to return the tools and dies to Contractor, the salvage value thereof. BPCA shall have the right to set off against such payment due to Contractor any amounts then due and payable by Contractor to BPCA which may accrue as damages owing by Contractor to BPCA under the terms of this Agreement. Contractor shall execute any further documents (including Form UCC-1 Financing Statements to give public notice of the potential ownership interest of Owner as set forth herein) required by BPCA to confirm the terms of this subsection 15.1(b).

(c) Upon termination of this Agreement, BPCA shall have the right, in addition to all other rights and remedies, to complete or have the Work completed by such means and in such manner, by contract or otherwise, with or without public letting as permitted by law, as BPCA deems advisable. BPCA may deduct any loss it incurs thereby from any payment then or thereafter due to Contractor without prejudice to any other remedy BPCA may have.

(d) Immediately upon termination in accordance with the provisions of this Section, each and every Subcontract and Purchase Order entered into by Contractor shall, at BPCA's option, be automatically assigned to BPCA, and Contractor shall insert a provision to this effect in all Subcontracts and Purchase Orders. In the event that it shall be determined that a termination under this paragraph was wrongful or not justified, such termination shall be conclusively deemed to be a termination for convenience of BPCA under Section 15.2 hereof and the sole right, remedy and recourse of Contractor against BPCA shall be governed and determined by Section 15.2 hereof.

(e) Contractor shall, upon the date when such termination shall take effect, promptly notify the union or unions, if any, having jurisdiction over the work by its employees that it releases the Project and consents that the Work be performed by others and Contractor expressly authorizes BPCA to notify the union or unions of such release in the name of Contractor. The failure, neglect or refusal of Contractor to issue such release or the disclaimer by it of the effectiveness of the release issued by BPCA shall subject Contractor to all damages sustained by BPCA.

(f) If this Agreement shall have been terminated by BPCA pursuant to this Section 15.1 and it shall be finally determined by BPCA or a court of competent jurisdiction that adequate grounds for such termination did not exist, then such termination shall be deemed a termination for convenience of BPCA under Section 15.2 hereof and the sole right, remedy and recourse of Contractor against BPCA shall be governed and determined by Section 15.2 hereof.

15.2 Termination for Convenience of BPCA

(a) BPCA, at any time, may terminate this Agreement for its own convenience. Any such termination shall be effected by delivering to Contractor a notice of termination specifying the extent to which performance of Contractor's Work under the Contract is terminated and the date upon which such termination becomes effective. Upon receipt of the notice of termination, Contractor shall:

(1) stop work under this Agreement on the date specified in the notice of termination;

(2) place no further Purchase Orders or Subcontracts for Materials, services or facilities;

(3) unless directed otherwise by BPCA, terminate all Purchase Orders and Subcontracts;

(4) assign to BPCA, in the manner, at the times, and to the extent directed by Construction Manager, all of the right, title and interest of Contractor under the Purchase Orders and Subcontractors so terminated, in which case BPCA shall have the right, in its sole discretion, to settle or pay any or all claims arising out of the termination of such Purchase Orders and Subcontracts;

(5) to the extent required by Construction Manager, settle all outstanding liabilities and all claims arising out of such termination of Purchase Orders and Subcontracts, with the approval or ratification of Construction Manager, which approval or ratification shall be final for all the purposes of this Section 15.2;

(6) transfer title to BPCA and deliver in the manner, at the time, and to the extent, if any, directed by the Construction Manager (i) the fabricated or unfabricated parts, Work in process, completed Work, supplies, and other Material produced as a part of, or acquired in connection with the performance of, the Work terminated by the notice of termination, and (ii) the completed or partially completed plans, drawings, work product, information and other property, which if this Agreement had been completed, would have been required to be furnished to BPCA;

(7) take such action as may be necessary, or as the Construction Manager may direct, for the protection and preservation of the property related to this Agreement which is in the possession of Contractor and in which BPCA has or may acquire an interest.

(b) In the event of a termination of this Agreement pursuant to this Section 15.2, Contractor shall be paid by BPCA only the apportioned Contract Price for Work installed, the fair and reasonable value of Materials stored on the Site and under order for which Contractor is responsible for payment, less any sums properly deductible by BPCA, except that in no event shall Contractor be entitled to compensation in excess of the total Contract Price.

15.3 Suspension of Work

(a) BPCA may at any time and for any reason direct Contractor to suspend, stop, or interrupt the Work or any part thereof for a period of time. Such direction shall be in writing and

shall specify the period during which the Work is to be stopped. Upon receipt of a direction of suspension, Contractor shall, as soon as practicable, cease performance of the Work as ordered and take immediate affirmative measures to protect the Work from loss or damage. Contractor shall resume the Work upon the date specified in such direction or upon such other date as BPCA may thereafter specify in writing.

(b) The period during which the Work shall have been suspended, stopped or interrupted may, if warranted, be added to the time fixed for performance. A suspension, stoppage or interruption of the Work pursuant to this provision shall not give rise to any claim against BPCA for additional compensation.

ARTICLE 16 - COMPOSITE DRAWINGS AND COOPERATION

Where Contractor shall perform Work in close proximity to work of other contractors or subcontractors, or where there is evidence that Contractor's Work may interfere with work of other contractors, or subcontractors, Contractor shall assist in arranging space conditions to make satisfactory adjustment for the performance of such work and the Work. Contractor shall prepare composite scale working drawings and Sections as directed by Construction Manager, clearly showing how Contractor's Work is to be performed in relation to work of other contractors or Subcontractors. Such direction may include the following: the scale of the drawings, where the drawings are to be drafted, the number of prints or reproducibles, and the requirement of attendance at meetings. The determination as to who shall provide the composite drawings and the contents of the same shall rest exclusively with Construction Manager. Upon request by Construction Manager, Contractor shall sign and be bound by such composite drawings. Such signature shall indicate Contractor's acknowledgment that such drawing is acceptable as related to its Work covered or included in such drawing. If Contractor performs work in a manner which causes interference with the work of other contractors, or Subcontractors, Contractor shall make the changes necessary to correct the condition as directed by Construction Manager.

ARTICLE 17 - PROTECTION OF RIGHTS, PERSONS AND PROPERTY

17.1 Accident Prevention

Contractor shall at all times take every precaution against injuries to persons or damage to property and for the safety of persons engaged in the performance of the Work.

17.2 Safety Programs

Contractor shall be responsible for the initiation, maintenance and supervision of safety precautions and programs as prescribed by Construction Manager in connection with the Work.

17.3 Protection of Work and Property

(a) Contractor shall at all times guard BPCA's property from injury or loss in connection with the Work. Contractor shall at all times guard and protect the Site, the Work and adjacent property. Contractor shall replace or make good any such loss or injury unless such loss or injury is caused directly by BPCA.

(b) Contractor shall have full responsibility to install, protect and maintain all Materials in proper condition and forthwith repair, replace and make good any damage thereto until Final Acceptance of the Work.

(c) No provision is included for stresses or loads imposed by construction operations. If Contractor desires to place such loads in excess of the design load (as shown on the Drawings or Specifications), Contractor shall submit to Architect drawings and calculations prepared by, and bearing the seal of a professional engineer, showing the proposed method for supporting

such loads, for Architect's review and approval. No loading of any kind in excess of design loads shall be placed on any part of the Project prior to Architect's approval of such submitted drawings and calculations. The costs of the Architect's review shall be reimbursed to BPCA by Contractor.

(d) Contractor shall be responsible for all cutting, fitting or patching that may be required to complete the Work, to make its several parts fit together properly and to make the Work fit together properly with previous and surrounding work. The requirement to cut, fit or patch shall be determined by Construction Manager; provided, that structural elements of the Project shall not be cut, patched, or otherwise altered or repaired without prior authorization by BPCA. Authorization to proceed with remedial operation on any damaged or defective element or portion of the Project shall not constitute a limitation or a waiver of BPCA's, Construction Manager's or Architect's right to require the removal and replacement of any Work which fails to fulfill the requirements of the Contract Documents.

17.4 Adjoining Property

Contractor shall protect all adjoining property and shall repair or replace any such property damaged or destroyed during the progress of the Work.

17.5 Risks Assumed by Contractor

(a) Contractor solely assumes the following risk whether such risk arises from acts or omissions (whether negligent or not and whether supervisory or otherwise) of BPCA, Construction Manager, of Architect or Contractor, of any Subcontractor, of any Materialman, of third persons or from any other cause, including unforeseen obstacles and difficulties which may be encountered in the prosecution of the Work, whether such risk is within or beyond the control of Contractor and whether such risk involves any legal duty, primary or otherwise, imposed upon BPCA:

> the risk of loss or damage, direct or indirect, of whatever nature, to the Work or to any Materials furnished, used, installed or received by BPCA, Contractor or any Subcontractor, Materialmen or workmen performing services or furnishing Materials for the Work, whether such Work or Materials are stored at the Site or at an offsite location in accordance with Section 5.4 hereof. Contractor shall bear such risk of loss or damage until Final Acceptance of the Work by BPCA or until completion of such Materials or removal of such Materials from the Site following a determination that they will no longer be needed for the Project and delivery to the location at which they are to be subsequently stored or disposed of, whichever event occurs last. A portion of the risk of such loss or damage may be insured against under the terms of a "builder's risk" insurance policy maintained in the name of Contractor, among others, as described in Section 13.1(i). Notwithstanding the status of any actual or potential recovery or claim under the said "builder's risk" insurance policy, in the event of any loss or damage, Contractor immediately shall repair, replace or make good any such loss or damage.

(b) Contractor shall not, without obtaining express advance permission of BPCA, raise any defense involving in any way jurisdiction of any court in which BPCA brings an action arising under this Agreement, governmental nature of BPCA or the provisions of any statutes respecting suits against BPCA.

(c) Contractor's obligations under this Article 17 shall not be deemed waived, limited or discharged by the enumeration or procurement of any insurance for liability for damages.

(d) Neither Final Acceptance of the Work nor any payment made hereunder shall release Contractor from Contractor's obligations under this Article 17. The enumeration elsewhere in this Agreement of particular risks assumed by Contractor or of particular claims for which Contractor is responsible shall not be deemed to limit the effect of the provisions of this Article 17 or to imply that Contractor assumes or is responsible for only risks or claims of the

type enumerated; and neither the enumeration in this Article 17 nor the enumeration elsewhere in this Agreement of particular risks assumed by Contractor of particular claims for which Contractor is responsible shall be deemed to limit the risks which Contractor would assume or the claims for which Contractor would be responsible in the absence of such enumerations.

(e) The Contractor is advised that the Work under this Agreement may impose certain obligations and requirements mandated by the U.S. Department of Labor Occupational Safety and Health Administration regulations, Title 29 CFR Part 1926.62 Lead Exposure in Construction, relative to the potential exposure to lead by its employees. The Contractor assumes entire responsibility and liability for complying fully in all respects with these regulations.

(f) Contractor agrees that any unsatisfied claims of the BPCA arising from Contractor's obligations under this Article 17 or Article 13 (Insurance) may be offset or deducted by BPCA from any payments due to Contractor hereunder.

ARTICLE 18 - USE PRIOR TO ACCEPTANCE BY BPCA

(a) If before Final Acceptance of Work, BPCA desires to use the Site or any part thereof which is completed or partly completed, or to place or install therein or thereon equipment, BPCA shall have the right to do so, and Contractor shall in no way interfere with or object to such use by BPCA.

(b) Such use (1) shall not constitute acceptance of space, systems, Materials or elements of the Work, nor shall such use affect the start of any guaranty period and (2) shall not affect the obligations of Contractor for work which is not in accordance with the requirements of this Agreement or other obligations of Contractor under the Contract Documents.

(c) Contractor shall continue the performance of the Work in a manner which shall not unreasonably interfere with such use by BPCA.

ARTICLE 19 - EXEMPTION FROM SALES AND COMPENSATING USE TAXES

19.1 BPCA Exempt

BPCA is exempt from payment of sales and compensating use taxes of the State of New York and of cities and counties thereof on all Materials which will become an integral component of the completed Project pursuant to this Agreement.

19.2 Certificates

Contractor, Subcontractors and Materialmen shall obtain any and all necessary certificates or other documentation from the appropriate governmental agency or agencies, and use such certificates or other documentation as required by law, rule or regulations to obtain said tax exemption.

ARTICLE 20 - WARRANTIES AND GUARANTIES

20.1 In General

(a) Contractor guarantees that all Work performed and all Materials furnished will conform to the Contract Documents as to kind, quality, functions, design and characteristics of material and workmanship. Contractor shall remove, replace and repair, at its sole cost and expense, all defects in workmanship, Materials, ratings, capacities, or design characteristics occurring in or to the Work including, without limitation, any portion of the Work furnished or performed by any Subcontractor or Materialman, within one year from the date of Final

Acceptance. Contractor guarantees that all Work performed and all Materials furnished will conform to the Contract Documents as to kind, quality, functions, design and characteristics of material and workmanship. Contractor hereby acknowledges that BPCA may be required to incur substantial expense if correction of the Work is required particularly if such correction involves the uncovering, removal or replacement of concrete, wiring and piping installed at the Site. If Contractor shall fail to reimburse BPCA for any such expense which may become payable as provided in this paragraph, BPCA shall be entitled to deduct such expense from any payments required to be made by BPCA to Contractor pursuant to this Agreement. Contractor, upon demand, shall pay for all damage to all other Work resulting from such defects and all expenses necessary to remove, replace and repair such other Work which may be damaged in removing, replacing or repairing such defects.

(b) The benefits of this Article 20 shall inure to the benefit of BPCA and its respective successors and assigns. In addition, any bond or guaranty which may be required of Contractor or any Subcontractor or Materialman under the Contract Documents shall inure to the benefit of BPCA and its respective successors and assigns.

(c) The rights and remedies afforded BPCA under this Section are in addition to and not in lieu of and do not in any way affect, change, alter, modify, vary or prejudice any right, remedy or recourse which BPCA may have under other provisions of this Agreement or pursuant to law.

20.2 Additional Guaranties

In addition to the general guaranty set forth in Section 20.1, any other guaranties set forth in the Contract Documents shall be applicable.

20.3 Repair by Another

If BPCA has requested Contractor to correct any Work and Contractor shall not have completed any correction of the Work as shall be required pursuant to this Article 20 within ten (10) working days after receipt of written notice from BPCA specifying the defect or damage required to be removed, replaced or repaired, or if such defect or damage is of such a nature that it cannot be completely removed, repaired and replaced within such ten (10) day period and Contractor shall not have diligently commenced removing, repairing and replacing such defect and damage within such ten (10) day period or shall not thereafter with reasonable diligence and in good faith proceed to do such work, BPCA may employ such other person, firm or corporation as it may choose, to perform such removal, replacement and repair, and Contractor shall, upon demand, pay to BPCA all amounts which BPCA expends for such removal, replacement and repair.

ARTICLE 21 - INDEMNITY

21.1 Delay or Failure

Contractor and its sureties shall be responsible for and pay to BPCA, all loss, damage and additional cost incurred by reasons or on account of (i) the unexcused delays of Contractor (determined as set forth in Section 3.1 hereof) or (ii) Contractor's failure to fully and completely carry out the terms of this Agreement.

21.2 Inventions

In addition to the indemnity set forth in Section 17.5(a), Contractor shall indemnify and hold BPCA harmless from all claims, demands or liabilities of any kind or nature, including costs and expenses, for or on account of any patented or unpatented plan, design, invention, article, arrangement, appliance, Material, or preparation, manufactured, used or followed in the performance of or incident to the Work hereunder, and shall defend any and all actions arising out of the same. In the event of any injunction or legal action by reason thereof, which shall operate to stop or retard the Work, BPCA shall have the right to substitute such other articles of like kind as will enable it to complete the Project, and all costs and expenses occasioned thereby shall be borne by Contractor.

21.3 Liability

Contractor shall hold BPCA, the Conservancy, the State of New York, Construction Manager and Architect and their servants, agents and employees harmless from and shall indemnify them against any and all liability, loss, cost, damage or expense, including attorneys' fees, by reason of claims of Contractors employees or employees of its Subcontractors or Materialmen for injuries or death or by reason of claims of any other person or persons, including BPCA, the Conservancy, the State of New York, Construction Manager, and Architect and their servants, agents or employees, for injuries to person or property or for death occasioned in whole or in part by any act or omission of Contractor, its Subcontractors and Materialmen and their servants, agents and employees whether or not it is contended that BPCA contributed thereto or was responsible therefor by reason of nondelegable duty. If, however, this indemnification is limited by applicable law, then the said indemnification hereby shall be similarly limited to conform with such law, it being the intention that this indemnification shall be as permitted by applicable law. BPCA may retain any monies due or to become due hereunder sufficient to indemnify BPCA, the Conservancy, the State of New York, Construction Manager, and Architect and their servants, agents and employees against such injuries, claims, suits, actions, costs or damages should any such claim arise. Contractor shall, at the sole option of BPCA and upon written demand of BPCA, assume the defense in behalf of BPCA, the Conservancy, the State of New York, Construction Manager, and Architect or their servants, agents or employees of any action or proceeding commenced against them whether or not Contractor is named as a party therein as part of Contractor's aforementioned obligation to indemnify and hold them harmless.

ARTICLE 22 - PATENTS AND ROYALTIES

(a) In the prosecution of the Work, Contractor will not use or furnish any patented appliance, article, device or method of construction unless it has authorization for such use. Contractor shall pay all royalty and license fees.

(b) Any approval of Materials by Architect shall be construed merely as an approval of their adequacy for the Work.

(c) Contractor will be responsible for all claims against BPCA for the infringement of any patents. Contractor shall defend all suits and claims for infringement of any patent rights and shall indemnify and hold BPCA harmless from loss on account thereof. Any expenses incurred by Contractor in connection with suits and claims will not offset the Contract Price.

(d) Contractor hereby and presently grants to BPCA an irrevocable and non-exclusive license to utilize all of the Contractor's rights in and to:

(1) all United States patents and patents registered in any other foreign country;

(2) all proprietary knowledge, data and trade secrets; and

(3) all Engineering data and information necessary in connection with and solely in connection with, all work performed by BPCA or other contractors hired by BPCA to complete the work after termination of this Agreement pursuant to Section 15.1.

Each Purchase Order and Subcontract shall contain a similar clause with respect to the rights of Subcontractor and Materialman in and to the foregoing, in form and substance acceptable to BPCA, granting BPCA the aforesaid license. BPCA shall not be obligated to pay any royalties, license fees or any other consideration to Contractor or any Subcontractor or Materialman for this license. Contractor and each Subcontractor and Materialman shall execute a separate license agreement, in form and substance satisfactory to BPCA, concurrently with the execution of this Agreement, or any Subcontract or Purchase Order, or within ten (10) days thereafter, embodying the terms of this Section. On request, Contractor and each Subcontractor and Materialman shall furnish BPCA with copies of all related Engineering and technical data required to complete the work.

ARTICLE 23 - AS-BUILT DRAWINGS

(a) Contractor shall be furnished by BPCA, at BPCA's expense, with one physical set and two electronic copies (on disk) of 48" x 36" Drawings, on which Contractor, where applicable, shall record the installation of underground utilities, concealed piping, concealed valves and control equipment and record changes in the Work. Such recording shall be kept current and include final and actual sizes as well as the location and elevation of the above figures and offset distances in feet and inches to permanent surface improvements such as buildings, retaining walls or curbs. During the progress of the Work, at the request of Construction Manager and prior to the approval of any Requisition of Contractor, Contractor shall provide a 48" x 36" PDF to BPCA of the up to-date Drawings showing the Work as installed. At completion of the Work, Contractor shall complete, sign and date the 48" x 36" physical set of Drawings and deliver it to Architect.

(b) After review by Architect and return to Contractor for any required changes, Contractor shall furnish to BPCA, at Contractor's expense, at least one physical set and two electronic copies (on disk) of 48" x 36" final Drawings.

ARTICLE 24 - SHOP DRAWINGS AND SAMPLES

24.1 Contractor Submittal

Contractor shall submit to Construction Manager the shop drawings, Product Data and Samples required by the Contract Documents and shall adhere to all submittal and scheduling requirements with respect thereto. After review of such shop drawings, Product Data and Samples by Construction Manager and their approval by Architect, each of such items shall be returned in accordance with the procedures established therefor.

24.2 Contractor's Responsibility

Architect's approval of shop drawings, Product Data and Samples shall not relieve Contractor of responsibility for and deviation from the requirements of the Contract Documents. Contractor shall be responsible for the accuracy of the shop drawings, Product Data and Samples and for the conformity of Documents unless Contractor has notified Architect of the deviation in writing at the time of submission and has received from Architect written approval by separate letter of the specified deviations. Architect's approval shall not relieve Contractor of responsibility for errors or omissions in the shop drawings, Product Data or Samples.

ARTICLE 25 – NOTICES

Whenever it is provided herein that notice, demand, request, consent, approval or other communication shall or may be given to, or served upon, either of the parties by the other, or whenever either of the parties desires to give or serve upon the other any notice, demand, request, consent, approval or other communication with respect hereto, each such notice, demand, request, consent, approval or other communication shall be in writing and shall be effective for any purpose only if given or served by hand with proof of delivery, by delivery by an overnight courier service which obtains receipts, or by mailing the same by express or certified mail, postage prepaid, return receipt requested, addressed to:

(a) If to BPCA:

[Name & Title of BPCA Person], Battery Park City Authority, One World Financial Center, 24th floor, New York, NY 10281

with a copy to: General Counsel, at the same address

or to such other address as BPCA may from time to time designate in the manner set forth above.

(b) If to Contractor:

[Name, Company and Address]

or to such other addresses as Contractor may from time to time designate in the manner set forth above.

(c) if to Construction Manager

[Name, Company and Address]

or to such other addresses as the Construction Manager may from time to time designate in the manner set forth above.

(d) if to Architect/Engineer/etc.

[Name, Company and Address]

or to such other addresses as Architect or Engineer may from time to time designate in the manner set forth above.

(e) Every notice, demand, request, consent, approval or other communication hereunder shall be deemed to have been given or served (i) in the case of express or certified mail, on the date the receipt is dated by the Post Office or express mail carrier, as the case may be, and (ii) in the case of notice by hand or by overnight courier service, upon delivery, as evidenced by a signed receipt.

ARTICLE 26 - EMPLOYMENT AND DIVERSITY

26.1 Definitions

The following terms shall have the meanings set forth below for the purposes of this Article 26:

(a) "Certified Business." A business verified as a minority or women-owned business enterprise by the Division or such other New York State agency authorized to make such certification.

(b) "Diversity Program." The program by which Owner shall monitor Contractor's compliance with the requirements set forth in (i) the MBE/WBE Required Participation Plan and (ii) the Utilization Plan.

(c) "Division." The Division of Minority and Women's Business Development of the New York State Department of Economic Development.

(d) "Director." The Director or the Executive Director of the Division.

(e) "Directory." The directory of certified businesses prepared by the Director for use by Owner and contractor in complying with the provisions of the Executive Law of the State of New York, Article 15-A.

(f) "MBE/WBE Required Participation Plan." The plan previously submitted by Contractor to Owner listing the certified MBEs and/or WBEs which the Contractor intends to use in the performance of this agreement in order to ensure that MBEs and WBEs are awarded a fair share of the total dollar value that is to be paid for the Work.

(g) "Minority" or "Minority Group Member." A United States citizen or permanent resident alien who is and can demonstrate membership in one of the following groups:

(1) Black persons having origins in any of the Black African racial groups;

(2) Hispanic persons of Mexican, Puerto Rican, Dominican, Cuban, Central or South American descent of either Indian or Hispanic origin, regardless of race;

(3) Native American or Alaskan native persons having origins in any of the original peoples of North America; or

(4) Asian and Pacific Islander persons having origins in any of the Far East countries, South East Asia, the Indian subcontinent or the Pacific Islands.

(h) "Minority-owned Business Enterprise" ("MBE"). A business enterprise, including a sole proprietorship, partnership or corporation that is:

(1) at least 51 percent owned by one or more Minority Group Members;

(2) an enterprise in which such Minority ownership is real, substantial and continuing;

(3) an enterprise in which such Minority ownership has and exercises the authority to control and operate, independently, the day-to-day business decisions of the enterprise; and

(4) an enterprise authorized to do business in the State of New of New York and is independently owned and operated.

(i) "Subcontract." An agreement providing for a total expenditure in excess of $25,000 for the construction, demolition, replacement, major repair, renovation, planning or design of real property and improvements thereon between a contractor or consultant and any individual or business enterprise, including a sole proprietorship, partnership, corporation, or not-for-profit corporation, in which a portion of a contractor's obligation is undertaken or assumed, but shall not include any construction, demolition, replacement, major repair, renovation, planning or design or real property or improvements thereon for the beneficial use of the contractor.

(j) "Utilization Plan." A plan previously submitted by Contractor to Owner which sets forth the proposed percentages of employees who are either Minority Group Members or women and who will be used by Contractor to perform the Work.

(k) "Women-owned Business Enterprise" ("WBE"). A business enterprise, including a sole proprietorship, partnership or corporation that is:

(1) at least 51 percent owned by one or more United States citizens or permanent resident aliens who are women;

(2) an enterprise in which the ownership interest of such women is real, substantial and continuing;

(3) an enterprise in which such women ownership has and exercises the authority to control and operate, independently, the day-to-day business decisions of the enterprise; and

(4) an enterprise authorized to do business in the State of New York and which is independently owned and operated.

26.2 Equal Employment Opportunities for Minority Group Members and Women

(a) During the performance of the Work, Contractor agrees as follows:

(1) Contractor shall not discriminate against any employee or applicant for employment because of race, creed, color, national origin, sex, age,

disability or marital status; shall undertake or continue existing programs to ensure that Minority Group Members and women are afforded equal employment opportunities without discrimination because of race, creed, color, national origin, sex, age, disability or marital status; and shall make and document its good faith effort to achieve prompt and full utilization of Minority Group Members and women at all levels and in all segments of its work force where deficiencies exist.

(2) At the request of Owner, Contractor shall request each employment agency, labor union, or authorized representative of workers with which it has a collective bargaining or other agreement or understanding, to furnish a written statement that such employment agency, labor union, or representative will not discriminate on the basis of race, creed, color, national origin, sex, age, disability or marital status and that such union or representative will affirmatively cooperate in the implementation of Contractor's obligations herein.

(3) Contractor shall state in all solicitations or advertisements for employees that in the performance of the Work, all qualified applicants will be afforded equal employment opportunities without discrimination because of race, creed, color, national origin, sex, age, disability or marital status.

(4) Contractor and any Subcontractor shall be required to submit compliance reports in accordance with this Section 26 relating to their operations and the implementation of the Diversity Program in effect as of the date of execution of this Agreement.

(5) Contractor shall submit an EEO policy statement to Owner within seventy-two hours of notice from Owner of the awarding of this contract to Contractor. If Contractor does not have an existing EEO policy statement, Owner may provide to Contractor a model statement.

(b) Contractor shall include the provisions of Section 26.2(a) in every Subcontract in such a manner that the provisions will be binding upon each Subcontractor as to the Work in connection with this contract's execution.

(c) Contractor shall comply with the provisions of the Human Rights Law, all other State and Federal statutory and constitutional non-discrimination provisions. Contractor and subcontractors shall not discriminate against any employee or applicant for employment because of race, creed (religion), color, sex, national origin, sexual orientation, military status, age, disability, predisposing genetic characteristic, marital status or domestic violence victim status, and shall also follow the requirements of the Human Rights Law with regard to non-discrimination on the basis of prior criminal conviction and prior arrest

(d) Miscellaneous

(1) The provisions of this Section shall not be binding upon Contractor or its Subcontractors in the performance of Work or the providing of services, or any other activities that are unrelated, separate or distinct from this Agreement as expressed by its terms.

(2) The requirements of this Section shall not apply to any employment outside New York State, or application for employment outside such state, or solicitations, or advertisements therefore, or any existing programs of diversity regarding employment outside New York State and the effect of contract provisions required by this section shall be so limited.

(e) Enforcement

The parties agree to be bound by provisions of Article 15-A of the Executive Law of the State of New York and by the regulations adopted thereunder.

26.3 Workforce Participation

(a) Contractor is required to make and document good faith efforts to achieve the participation of _____ % Minority Group Members and _____ % women in the workforce for each trade or services utilized by Contractor in the Work as set forth in the Utilization Plan.

(b) To ensure compliance with this Section, Contractor shall submit a staffing plan to document the composition of the proposed workforce to be utilized in the performance of this contract by the specified categories listed, including ethnic background, gender, and Federal occupational categories. Contractors shall complete the staffing plan form and submit it as part of their bid or proposal or within a reasonable time, but no later than the time of award of the contract.

(c) The participation for Minority Group Members and women employees must be substantially uniform throughout the work.

(d) Contractor shall not participate in the transfer of Minority Group Member employees or women employees from employer to employer or from project to project for the sole purpose of satisfying the participation goals above set forth.

(e) In achieving such participation, Contractor is required to make good faith efforts to find and employ qualified Minority Group Members and women supervisory personnel and journeymen.

(f) Contractor shall meet with Owner, and such other persons as Owner may invite, on a periodic basis as required by Owner to discuss issues relating to Minority Group Members and women workforce participation. At such meetings, Contractor shall report on the names of its Subcontractors then engaged in construction on the project to which the Work relates or which within 60 days are scheduled to be engaged in construction of such project, on the nature of the work and anticipated construction schedule of Contractor and Subcontractors, on the anticipated hiring needs of Contractors and Subcontractors, on the names of the responsible foremen directly employed by Contractor, and such information requested by Owner that will then promote the employment of Minority Group Members and women. Contractor shall use its best efforts to obtain the above information and shall, upon Owner's request, cause its Subcontractors to attend said meetings and provide the above information.

(g) Compliance reports with respect to the Utilization Plan ("Utilization Compliance Reports") which shall be submitted to Owner's Diversity officer on a monthly basis and shall be in accordance with the following:

(1) Owner may require that Contractor submit Utilization Compliance Reports for the duration of this contract to Owner regarding Contractor's operation and implementation of the Utilization Plan portion of the Diversity Program in effect as of the date of execution of this Agreement.

(2) The Utilization Compliance Reports shall include information on any Subcontractor involved in the performance of the contract with regard to the Subcontractor's compliance with the Diversity Program.

(3) The Utilization Compliance Reports shall include, but are not limited to the following:

(i) a breakdown of the Subcontractors by ethnic background, gender or such other categories as may be required by Owner;

(ii) the actions the Contractor and Subcontractors have taken to meet the components of the Diversity Program;

(iii) how Contractor and Subcontractors intend to utilize participation of Minority Group Members and women in their workforce in connection with the performance of the Work and timetables therefor

during the remainder of their performance of the Work.

(h) Any failure by Consultant to submit a required Utilization Compliance Report, including information on any of its Subcontractor's compliance, may be deemed a breach of contract with respect to this agreement.

(i) Contractor shall include the provisions in Section 26.3 in every Subcontract, and such provisions shall be binding upon each Subcontractor.

26.4 Minority Business Enterprise (MBE) Participation and Women's Business Enterprise Participation

(a) Contractor shall make good faith efforts to attain the participation of _____ % MBE and _____% WBE in the total dollar value of the Work.

(b) The total dollar value of the Work for purposes of determining compliance with the MBE/WBE Required Participation Plan shall be calculated as follows:

(1) if an MBE and WBE is not the Contractor -- the dollar value of the Work subcontracted to MBEs and WBEs; provided, however, that where materials are purchased from an MBE and WBE which acts merely as a conduit for goods manufactured or produced by a non-MBE and non-WBE, only that portion of the price paid for such materials which will accrue as profit to the MBE or WBE and/or the Fee received by the MBE and WBE shall be included;

(2) if Contractor is a joint venture including one or more MBEs and WBEs as joint venturers -- the Fee multiplied by the percentage of the joint venture's profits (or losses) which are to accrue to the MBE and WBE joint venturer(s) under the joint venture agreement; and

(3) if an MBE and WBE is Contractor or where Contractor is a joint venture consisting entirely of MBEs and WBEs -- the Fee.

(c) Compliance reports with respect to the MBE/WBE Required Participation Plan ("MBE/WBE Compliance Reports") shall be required as follows:

(1) MBE/WBE Compliance Reports shall be submitted to Owner on a monthly basis and shall include information with respect to:

(i) dividing the Work to be subcontracted into smaller portions, where economically and technically feasible;

(ii) actively and affirmatively making a good faith effort to solicit bids for subcontracts from qualified MBEs and WBEs identified in the directory of certified businesses available at the office of the Owner's Diversity Officer, including the circulation of solicitations to Minority contractor associations. Contractor shall maintain records detailing the efforts made to provide for meaningful MBE and WBE participation in the Work, including the names and addresses of all MBEs and WBEs contacted and, if any such MBE or WBE is not selected as a joint venture or subcontractor, the reasons for such decision;

(iii) making plans and specifications for prospective work available to MBEs and WBEs in sufficient time for review;

(iv) utilizing the services and cooperating with those organizations providing technical assistance to Owner in connection with the participation of MBEs and WBEs in the project to which the Work relates;

(v) encouraging the formation of joint ventures, partnerships or

other similar arrangements among subcontractors where appropriate;

(vi) ensuring that provision is made to provide progress payments to MBEs and WBEs on a timely basis; and

(vii) not requiring bonds from and/or providing bonds and insurance for MBEs and WBEs where appropriate, and/or assisting in obtaining bonds and insurance for MBEs and WBEs where feasible.

(2) MBE/WBE Compliance Reports which shall be submitted to the Diversity Department on a monthly basis.

(3) MBE/WBE Compliance Reports shall also include, but not be limited to, the following information:

(i) the name, address and telephone number of each certified MBE and WBE which Contractor is using or intends to use to comply with the MBE/WBE Required Participation Plan.

(ii) a brief description of the contract scope of work to be performed for the Contractor by each certified MBE and WBE and the scheduled dates for performance;

(iii) a statement of whether the Contractor has a written agreement with each certified MBE and WBE which Contractor is using or intends to use, and if requested, copies of such agreements;

(iv) the actual total cost of the contract scope of work to be performed by each certified MBE and WBE for this Agreement; and

(v) The actual amounts of any payments made by Contractor to each certified MBE and WBE as of the date the MBE/WBE Compliance Report was submitted.

(d) Contractor shall provide Owner with Monthly MBE/WBE and Workforce Utilization Reports, by the last calendar day of each month, **in the form of Exhibit [x]** hereto. Failure to provide such reports shall be an event of default of Contractor's obligations pursuant to Article 15.1 (a) (1) hereof.

(e) Contractor shall provide proof of payment to all subcontractors and materialmen in the form of a waiver of lien or cancelled check, with each request for payment. Failure to provide such proof of payment shall be an event of default of Contractor's obligations pursuant to Article 15.1 (a) (1) hereof.

26.5 Failure to Comply

(a) In accordance with 5 NYCRR §142.13, Contractor acknowledges that if it is found to have willfully and intentionally failed to comply with the M/WBE participation goals set forth herein or any other requirements set forth in this Article 26, such finding constitutes a breach of contract and Owner may withhold payment from the Contractor as liquidated damages.

(b) Such liquidated damages shall be calculated based on the actual cost incurred by Owner related to Owner's expenses for personnel, supplies and overhead related to establishing, monitoring, and reviewing certified MBE/WBE programmatic goals and Diversity and Equal Opportunity compliance.

ARTICLE 27 - STANDARD PROVISIONS

27.1 Provision Required by Law Deemed Inserted

Each and every provision of law and governmental regulation required by law to

be inserted in the Contract Documents shall be deemed to be inserted therein and this Agreement shall read and shall be enforced as though so included therein, and if through mistake or otherwise any such provision is not inserted, or is not correctly inserted, then upon the application of either party, this Agreement shall be deemed to be amended to make such insertion or correction. If this Agreement contains any unlawful provision, the same shall be deemed of no effect and shall, upon the application of either party, be deemed stricken from this Agreement without affecting the binding force of the remainder.

27.2 Compliance with Laws, Rules and Regulations

Contractor and each Subcontractor and Materialman shall comply fully with all applicable laws, rules and regulations pertaining to the Project and the Work.

27.3 Applicable Law, Forum and Jurisdiction

This Agreement shall be governed by the laws of the State of New York. All actions or proceedings relating, directly or indirectly, to this Agreement shall be litigated only in courts located within the County of New York. Contractor, any guarantor of the performance of its obligations hereunder (including sureties for Payment and Performance Bonds) ("Guarantor") and their successors and assigns hereby subject themselves to the jurisdiction of any state or federal court located within such county, waive the personal service of any process upon them in any action or proceeding therein and consent that such process be served by certified or registered mail, return receipt requested, directed to the Contractor and any successor at Contractor's address hereinabove set forth, to Guarantor and any successor at the address set forth in the instrument of guaranty and to any assignee at the address set forth in the instrument of assignment. Such service shall be deemed made as of the date of the return receipt.

27.4 No Third Party Rights

Nothing in this Agreement shall create or shall give to third parties any claim or right of action against BPCA, Construction Manager, or Architect beyond such as may legally exist irrespective of this Agreement.

27.5 Exculpation; Limitation of Liability

In no event shall any claim be asserted under this Agreement by Contractor or any Subcontractor or Materialman against any member, officer, employee, lessee, consultant or agent of BPCA, Construction Manager, or Architect. By execution of this Agreement, Contractor agrees to look solely to BPCA with respect to any claim which may arise. It is hereby understood by and between the parties hereto that BPCA shall only be liable to the extent of monies available to BPCA.

27.6 Protection of Lives and Health

(a) Contractor's, Subcontractor's and Materialman's attention is specifically called to the rules and regulations, codes and bulletins of the New York State Department of Labor. Attention is also directed to the standards imposed under the Federal Occupational Safety and Health Act of 1970, as amended.

(b) Contractor shall maintain an accurate record of all cases of death, occupational disease, and injury requiring medical attention or causing loss of time from work, arising out of and in the course of employment on work under this Agreement, and shall immediately notify BPCA in writing of any injury which results in hospitalization or death.

(c) Contractor alone shall be responsible for the safety, efficiency and adequacy of contractor's work, plant, appliances and methods, and for any damage which may result from the failure, or the improper construction, maintenance, or operation of such work, plant, appliances and methods.

27.7 Waiver of Immunity Clause

Contractor hereby agrees to the provisions of New York Public Authorities Law Section 2875 which require that upon the refusal of a person, when called before a grand jury, head of a State department, temporary State commission, or other State agency, the Organized Crime Task Force in the State Department of Law, head of a department or other City agency, which is empowered to compel the attendance of witnesses and examine them under oath, to testify in an investigation concerning any transaction or contract had with the State, any political subdivision thereof, or with any public department, agency or official of the State, a public authority or with any public department, agency or official of the State or of any political subdivision thereof or of a public authority, that person must sign a waiver of immunity against subsequent criminal prosecution or to answer any relevant questions concerning such transaction or contract:

(a) such person, and any firm, partnership or corporation of which such person is a member, partner, director or officer shall be disqualified from thereafter selling to or submitting bids to or receiving awards from or entering into any contracts with any public authority or official thereof, for goods, work or services, for a period of five (5) years after such refusal; and

(b) any and all contracts made with any public authority or official thereof, by such person, and by any firm, partnership or corporation of which such person is a member, partner, director or officer may be canceled or terminated by the public authority without incurring any penalty or damages on account of such cancellation or termination, but any monies owing by the public authority for goods delivered or work done prior to the cancellation or termination shall be paid.

27.8 Prohibited Interests

No official of BPCA who is authorized in such capacity and on behalf of BPCA to negotiate, make, accept, or approve, or take part in negotiating, making, accepting, or approving any Architectural, Engineering, inspection, Purchase Order or any Subcontract in connection with the work, shall become directly or indirectly interested personally in the Agreement. Contractor is advised that no official or employee of BPCA is permitted to indirectly solicit, accept, or receive gifts whether in the form of money, service, loan, travel, entertainment, hospitality, thing or promise, or in any other form. No officer, employee, architect, attorney, engineer, inspector or consultant of or for BPCA who is authorized in such capacity and on behalf of BPCA to exercise any legislative, executive, supervisory or other similar functions in connection with the Work, shall become directly or indirectly interested personally in the Agreement, any Purchase Order, Subcontract, insurance contract, or any other contract pertaining to the Work.

27.9 Labor Provisions

(a) It is hereby agreed that all applicable provision of the Labor Law of the State of New York shall be carried out in the performance of the Work.

(b) Contractor specifically agrees, as required by New York Labor Law Sections 220 and 220-d as amended, that:

(1) no laborer, workman or mechanic, in the employ of Contractor, Subcontractor, Materialman or other person doing or contracting to do the whole or any part of the Work contemplated by the Contract Documents shall be permitted or required to work more than eight (8) hours in any one calendar day or more than five (5) days in any one week, except in the emergencies set forth in the Labor Law.

(2) the wages paid for a legal day's work shall be not less than the prevailing rate of wages as defined by law;

(3) the minimum hourly rate of wage to be paid shall be not less than that stated in the Contract Documents and as shall be designated by the Industrial Commissioner of the State of New York; and

(4) Contractor shall post at appropriate conspicuous points at the Site, a schedule showing all determined minimum wage rates for the various classes of laborers and mechanics to be engaged in the Work and all deductions, if any, required by law to be made from unpaid wages actually earned by the laborers and mechanics so engaged.

(c) The minimum wage rates, if any, herein specified for apprentices shall apply only to persons working with the tools of the trade which such persons are learning under the direct supervision of journeymen mechanics. Except as otherwise required by law, the number of apprentices in each trade or occupation employed by Contractor or any Subcontractor or Materialman shall not exceed the number permitted by the applicable standards of the New York State Department of Labor, or, in the absence of such standards, the number permitted under the usual practice prevailing between the unions and the employers' association of the respective trades or occupations.

(d) All employees of Contractor and each Subcontractor and Materialman shall be paid in accordance with the provisions of the Labor Law.

(e) Contractor agrees that, in case of underpayment of wages to any worker engaged in the Work by Contractor or any Subcontractor or Materialman, BPCA shall withhold from Contractor out of payments due an amount sufficient to pay such worker the difference between the wages actually paid such worker for the total number of hours worked, and that BPCA may disburse such amount so withheld by BPCA for and on account of Contractor to the employee to whom such amount is due. Contractor further agrees that the amount to be withheld pursuant to this paragraph may be in addition to the percentages to be retained by BPCA pursuant to other provisions of the Contract Documents.

(f) The Labor Law provides that this Agreement may be terminated for cause and no sum paid for any Work done thereunder upon a second conviction for willfully paying less than:

(1) the stipulated wage scale as set forth in New York Labor Law Section 220, subdivision 3, as amended, or

(2) less than the stipulated minimum hourly wage scale as specified in Labor Law, Section 220-d, as amended.

(g) Contractor specifically agrees, as required by the New York Labor Law Section 220-e, as amended, that:

(1) in the hiring of employees for the performance of Work under this Agreement or any Subcontract or Purchase Order hereunder, or for the manufacture, sale or distribution of Materials, equipment or supplies hereunder, but limited to operations performed within the territorial limits of the State of New York, no Contractor, Subcontractor, Materialman or any person acting on behalf of such Contractor or Subcontractor, or Materialman, shall by reason of race, creed, color, sex or national origin discriminate against any citizen of the State of New York who is qualified and available to perform the work to which the employment relates;

(2) no Contractor, Subcontractor, Materialman, or any person on behalf of such Contractor, Subcontractor or Materialman shall, in any manner, discriminate against or intimidate any employee hired for the performance of work under this Agreement on account of race, creed, color, sex or national origin;

(3) there may be deducted from the amount payable to Contractor, by BPCA under this Agreement, a penalty of $50.00 for each person for each calendar day during which such person was discriminated against or intimidated in violation of the terms of this Agreement; and

(4) this Agreement may be canceled or terminated for cause by BPCA and all

monies due or to become due hereunder may be forfeited for a second or any subsequent violation of the terms or conditions of this Section of this Agreement.

(h) Where applicable, Contractor agrees to settle labor disputes in accordance with the provisions of The New York Plan For The Settlement of Jurisdictional Disputes Between The Building And Construction Trades Council Of Greater New York And The Building Trades Employers' Association Of The City of New York.

27.10 Disputes Resolution Procedure

(a) The provisions of this Article shall constitute Contractor's sole means for challenging any determination, order or other act or omission of BPCA or otherwise asserting against BPCA any claim of whatever nature arising under, or in any way relating to, this Agreement (any such challenge or assertion by Contractor being herein referred to as a "Dispute(s)"). Exhaustion of these dispute resolution procedures, including the judicial review set forth below, shall be the parties' sole remedy in connection with any Dispute.

(b) The parties to this Agreement hereby authorize and agree to the resolution of all Disputes arising out of, under or in connection with, this Agreement in accordance with the following and pursuant to the procedures set forth in paragraph (c) of this Section 27.10. With respect to any Dispute which relates in whole or primary part to technical issue(s) under this Agreement including, without limitation, determinations as to the acceptability or fitness of any Work, the meaning or interpretation of the Contract Documents, the question of whether any Work falls within the scope of the Specifications set forth in the Contract Documents, the acceptability of any proposed substitutions, modifications or other submissions under this Agreement, the disapproval of proposed Subcontractors or Materialmen (to the extent such disapproval is related to technical issues), the extension of time to the extent related to a technical matter, the question of whether substantial completion or final completion has been achieved, the parties hereby authorize the General Counsel of BPCA, or his/her designee, (hereinafter referred to as the "Arbiter"), acting personally, to render a final and binding decision.

(c) All Disputes shall be initiated through a written submission by either party (such submission to be hereinafter referred to as the "Dispute Notice") to the Arbiter within ten (10) days of the determination, order or other act or omission which is the subject of the Dispute. Within ten (10) days after the submission of such Dispute Notice, the party initiating the Dispute shall provide the Arbiter with all evidence and other pertinent information in support of the party's position and/or claim. Within thirty (30) days from the date of the Dispute Notice, the party against whom the Dispute Notice was filed shall submit any and all materials which it deems pertinent to the Arbiter. Upon submission of a Dispute Notice to the Arbiter, the Arbiter shall render its decision in writing and deliver a copy of same to the parties within a reasonable time not to exceed sixty (60) days after the receipt of all materials. In rendering such decision, the Arbiter may seek such technical or other expertise as it shall deem necessary or appropriate (notifying both parties to the Dispute when he/she so seeks such other information or expertise) and seek any such additional oral and/or written argument or materials from either or both parties to the Dispute as he/she deems fit. The Arbiter shall have the discretion to extend the time for submittals required hereunder. The Arbiter's ability to render and the effect of a decision hereunder shall not be impaired or waived by any negotiations or settlement offers in connection with the matter presented, whether or not the Arbiter participated therein, or by any prior decision of others, or by any termination or cancellation of this Agreement. The decision of the Arbiter shall be final and binding on both parties to this Agreement.

(d) It is expressly understood and agreed that the pendency of a Dispute hereunder shall at no time and in no respect constitute a basis for any modification, limitation or suspension of Contractor's obligation to fully perform in accordance with this Agreement and that Contractor shall remain fully obligated to perform the Work notwithstanding the existence of any such Dispute.

27.11 Additional Provisions Relating to the Prosecution of Claims for Money Damages

(a) Except as otherwise provided in this Agreement, if Contractor claims or intends to claim compensation or money damages for any damage or loss sustained by reason of any determination, order or other act or omission of BPCA, Contractor shall furnish a written notice to the Arbiter setting forth the nature of the claim and the extent of the damage sustained within ten (10) days of the occurrence of such loss or damages. This written notice shall constitute Contractor's submission to the Arbiter for the purposes of requesting the Arbiter's determination in accordance with Section 27.10 above. Any such claim shall state as fully as then possible all information relating thereto and shall be supported by any then available documentation, including daily records showing all costs incurred. Such information shall be supplemented with any and all further information, including information relating to the quantum of losses or damages sustained, as soon as practicable after the information becomes or reasonably should become known to the Contractor.

(b) Any claim for compensation or monetary damages, the successful prosecution of which necessarily depends upon a technical determination favorable to Contractor, may not proceed unless and until Contractor first obtains such a favorable determination with respect to the technical issue and must be made within ten (10) days of such determination; moreover, Contractor must submit to the Arbiter any documentation or proof in support of the monetary claim within fifteen (15) days of such determination in order to proceed with such a claim. This written notice shall constitute Contractor's submission to the Arbiter for the purposes of requesting the Arbiter's determination in accordance with Section 27.10 above.

(c) Compliance with the provisions hereof shall constitute a condition precedent to the Contractor's submission of a Dispute pursuant to Section 27.10 with respect to any claim for compensation or monetary damages and the Contractor shall be deemed to have waived any claim not submitted in accordance herewith.

(d) Any final determination of the Arbiter with respect to a Dispute initiated pursuant to this Article 27 shall be subject to review solely in the form of a challenge following the decision by the Arbiter in a Court of competent jurisdiction of the State of New York, County of New York, under Article 78 of the New York Civil Practice Law and Rules or a United States Court located in New York City under the procedures and laws applicable in that court, it being understood the review of such Court shall be limited to the question of whether or not the Arbiter's determination is arbitrary, capricious or lacks a rational basis. No evidence or information shall be introduced or relied upon in such proceeding which has not been duly presented to the Arbiter in accordance with this Article 27.

27.12 Limitation on Actions

(a) Subject to the provisions of Section 27.11, no action or proceeding shall lie or shall be maintained by Contractor against BPCA, Construction Manager, or Architect unless (i) such action or proceeding shall be commenced within six (6) months of the date of the issuance of the Certificate of Substantial Completion to Contractor; or (ii) in the case of an action or proceeding for monies due pursuant to Section 5.7 hereof, or arising exclusively from or pertaining exclusively to work performed after the date of issuance of the Certificate of Substantial Completion, unless such action or proceeding is commenced no later than six (6) months after the issuance of the certificate of final completion to Contractor; or (iii) if this Agreement is terminated by BPCA prior to the issuance of the Certificate of Substantial Completion, unless such action or proceeding is commenced within six (6) months after the date of such termination.

(b) Nothing in this Section 27.12 shall be construed to modify or lengthen a shorter limitations period provided by applicable law.

(c) No action or proceeding shall be commenced by Contractor against BPCA, Construction Manager, or Architect except in the Supreme Court of the State of New York, County of New York.

(d) Nothing in this Section 27.12 shall be construed to suggest that Contractor, under any circumstances, may bring an action or proceeding against Construction Manager, or Architect.

27.13 Waiver of Remedies

Contractor acknowledges that it can be compensated adequately by money damages for any breach of this Agreement which may be committed by BPCA, Construction Manager, or Architect. Contractor agrees that no default, act or omission of BPCA, Construction Manager, or Architect shall constitute a material breach of contract entitling Contractor to cancel or rescind this Agreement or to suspend or abandon performance thereof, other than the failure of BPCA to make a payment of the Contract Price in accordance with the terms hereof solely because sufficient funds to pay the Contract Price have not been appropriated or will otherwise not be made available to BPCA. Contractor hereby waives any and all rights and remedies to which Contractor might otherwise be or become entitled to because of any wrongful act or omission of BPCA, Construction Manager, or Architect except as provided in this Section 27.13 and Contractor's right to money damages.

27.14 Modification of Agreement

No change in or modification, termination or discharge of this Agreement in any form whatsoever shall be valid or enforceable unless it is in writing and signed by the party to be charged therewith or its duly authorized representative, provided, however, that any change in or modification, termination or discharge of this Agreement expressly provided for in this Agreement shall be effective as so provided.

27.15 Signs and Parking

Contractor agrees that it shall not display on or about the Site any sign, trademark or other advertisement without the approval of BPCA and Construction Manager Contractor shall not and shall not permit any of its Subcontractors or Materialmen to park any vehicles on the Site.

27.16 Entire Agreement

The Contract Documents constitute the entire Agreement between the parties and incorporate all prior understandings in connection with the subject matter hereof.

27.17 Rights and Remedies

The duties and obligations imposed by the Contract Documents and the rights and remedies available thereunder shall be in addition to and not a limitation of any duties, obligations, rights and remedies otherwise imposed or available by law. No action or failure to act by BPCA, Construction Manager, or Architect or Contractor including, but not limited to, the making of any payment or permitting Contractor to continue with the performance of the Work shall constitute a waiver of any right or duty afforded any of them under this Agreement, nor shall any such action or failure to act constitute an approval of or acquiescence in any breach thereunder, except as may be specifically agreed in writing.

27.18 Participation in International Boycott Prohibited

Contractor agrees, as a material condition of this Agreement, that neither Contractor nor any substantially owned or affiliated person, firm, partnership or corporation has participated or is participating or shall participate in an international boycott in violation of the provisions of the United States Export Administration Act of 1969, as amended, or the United States Export Administration Act of 1979, as amended, or the Regulations of the United States Department of Commerce promulgated thereunder. This Agreement shall be rendered forfeit and void by the Comptroller of the State of New York if, subsequent to execution, such person, firm, partnership or corporation has been convicted of a violation of the provisions of either of such federal acts or such Regulations or has been found upon the final determination of the United States Commerce Department or any other appropriate agency of the United States to have violated the provisions of either of such federal acts or such Regulations.

27.19 Compliance with "Buy-American" Statutes

Contractor and any substantially owned or affiliated person, firm, partnership or corporation agrees to comply with the New York Public Authorities Law, Section 2603-A as amended (affects steel or steel products).

27.20 Permitted Successors

References to parties and entities herein shall be deemed to include their permitted successors.

27.21 MacBride Fair Employment Principles

If the amount payable to Contractor under this agreement is greater than $15,000, Contractor hereby certifies that it and/or any individual or legal entity in which it holds a 10% or greater ownership interest, and any individual or legal entity that holds a 10% or greater ownership in it, either have no business operations in Northern Ireland; or shall take lawful steps in good faith to conduct any business operations they have in Northern Ireland in accordance with the MacBride Fair Employment Principles relating to nondiscrimination in employment and freedom of workplace opportunity regarding such operations in Northern Ireland, as set forth in New York State Finance Law Article XI Section 165(5), and shall permit independent monitoring of their compliance with such Principles.

27.22 Iran Divestment Act

By signing this contract, each person and each person signing on behalf of any other party certifies, and in the case of a joint bid or partnership each party thereto certifies as to its own organization, under penalty of perjury, that to the best of its knowledge and belief that each person is not on the list created pursuant to paragraph (b) of subdivision 3 of Section 165-a of the State Finance Law.

27.23 Termination for Failure to Disclose Under State Finance Law §139k

BPCA reserves the right to terminate this contract in the event it is found that the certification filed by Contractor pursuant to New York State Finance Law §139-k was intentionally false or intentionally incomplete. Upon such finding, BPCA may exercise its termination right by providing written notification to the Contractor in accordance with the written notification terms of this contract. If a contract is terminated in accordance with State Finance Law §139k(5), BPCA, its subsidiaries and affiliates, will include a statement in BPCA's procurement record describing the basis for any action taken under the termination provision.

27.24 Labor Peace

The Contractor and its Subcontractors and Materialmen shall not employ on the Work any labor, materials or means whose employment, or utilization during the course of this Agreement, may tend to or in any way cause or result in strikes, Work stoppages, delays, suspension of Work or similar troubles by workers employed by the Contractor or its Subcontractors, Materialmen, or by any of the trades working in or about the buildings and premises where Work is being performed under this Agreement, or by other contractors or their subcontractors pursuant to other agreements, or on any other building or premises owned or operated by BPCA, its contractors or affiliates. Any violation by the Contractor of this requirement may be considered as proper and sufficient cause for declaring the Contractor to be in default, and for BPCA to take action against Contractor as set forth in Article 15 of this Agreement, or such other Section of this Agreement as BPCA may deem proper.

27.25 Comptroller's Approval

If this Agreement is considered an "eligible contract," as defined by New York Code, Rules and Regulations Title 2 Part 206.2, it is subject to the New York State Comptroller's approval, and therefore shall not be valid and enforceable until that approval has been obtained. A contract is considered an "eligible contract," as defined by Title 2 of NYCRR Part 206.2, if it is not a specifically exempt contract, is executed by a state authority on or after March 1, 2010

where the aggregate consideration under the contract may reasonably be valued in excess of one million dollars (including all reasonably anticipated renewals and amendments), AND the contract (A) was or shall be awarded on a single-source basis, sole-source basis or pursuant to any other method of procurement that is not a competitive procurement OR (B) shall be paid in whole or in part with monies appropriated by the State, either directly to a state authority or to a state agency which pays the money to a state authority.

27.26 Key Person/Personnel

The parties understand that in entering into this Agreement, BPCA has relied upon Contractor's representation that [name(s) and title(s)] (hereinafter the "Key Personnel") will be directly and consistently involved in supervising the Work and actively engaged in the day-to-day management of the Work, which shall include attending mandatory Project meetings. If the Key Personnel is/are not available as described herein, or if the Key Personnel depart from the firm or severs his/her/their relationship with the Contractor, or for whatever other reason is/are not available to work on the Project, then BPCA shall have the right to terminate this Agreement. The parties also agree that at any time during the course of the Work, BPCA may designate additional or substitute key personnel to perform the Work. Contractor agrees to make the additional or substituted key personnel available under the same conditions set forth herein.

27.27 Form of Agreement Not an Offer

Notwithstanding anything herein to the contrary, the submission of this form of Agreement by BPCA to Contractor shall not constitute an offer, and execution hereof by Contractor shall not be considered acceptance of an offer. A binding contract between the parties shall exist only if and at such time as both parties have executed this document.

27.28 General Responsibility

(a) The Contractor shall at all times during the Agreement term remain responsible. The Contractor agrees, if requested by BPCA or its designee, to present evidence of Contractor's continuing legal authority to do business in New York State, integrity, experience, ability, prior performance, and organizational and financial capacity.

(b) BPCA or its designee, in its sole discretion, reserves the right to suspend any or all activities under this Agreement, at any time, when BPCA discovers information that calls into question the responsibility of Contractor. In the event of such suspension, Contractor will be given written notice outlining the particulars of such suspension. Upon issuance of such notice, Contractor must comply with the terms of the suspension order. Activity under the Agreement may resume at such time as BPCA or its designee issues a written notice authorizing a resumption of performance under the Agreement.

(c) Upon written notice to the Contractor, and a reasonable opportunity to be heard with appropriate BPCA officials or staff, the Agreement may be terminated by BPCA or its designee at Contractor's expense where Contractor is determined by BPCA or its designee to be nonresponsible. In such event, BPCA or its designee may complete the contractual requirements in any manner BPCA may deem advisable and pursue available legal or equitable remedies for breach.

SIGNATURE PAGE FOLLOWS

IN WITNESS WHEREOF, the parties hereto have executed this Agreement, as of the date first above written.

BATTERY PARK CITY AUTHORITY, d/b/a
HUGH L. CAREY BATTERY PARK CITY AUTHORITY

By: _____

Name: _____

Title: _____

CONTRACTOR NAME

By: _____

Name: _____

Title: _____

FEIN # _____

EXHIBIT D

Bid From

Date:

Battery Park City Authority
200 Liberty Street - 24th Floor
New York, New York 10281

Attention: Michael LaMancusa
Contract Administrator

Dear Mr. LaMancusa:

The undersigned (the "Proposer") hereby proposes to provide all specified work necessary to perform the work for the **Police Memorial and North Cove Marina Electrical Vault Resilience Project – Construction Services**. The Proposer agrees to commence the Work immediately upon receipt of the executed Contract in accordance with the terms stipulated in the following pages, for the sums written below.

A. Base Proposal

A lump sum amount of $_____ (_____ Dollars and _____ Cents) to perform all services described as Base Bid services in the Scope of Work attached as Exhibit A to BPCA's Request for Proposals.

B. Itemized Proposal, Unit Pricing, and Labor Rates

1. The Proposer has submitted with its proposal an Itemized Cost Breakdown (Schedule of Values) in the form attached as Exhibit E, for the Scope of Work described in Exhibit A and associated Construction Documents. These items comprise the total bid amount.

2. The Proposer has submitted with its Cost Proposal a Unit Pricing Schedule in the form attached as Exhibit F.

3. The Proposer has submitted with its Cost Proposal Labor Rates for all pertinent trades in the form attached as Exhibit G, including all costs except overhead and profit. Prices shown include base hourly rate, overtime rate, insurance and benefits.

C. **Add Alternates Proposal**

1. A cost for Cold Weather Protection for the Work Site, expressed as:
   (a) A lump-sum cost for installation and removal of Cold Weather Protection elements; and
   (b) A lump-sum per-week cost to maintain and operate the Cold Weather Protection.

Name of Proposer:

By: _____

Title: _____

EXHIBIT E

Schedule of Values Form

(attached)

SECTION 00 43 73 – PROPOSED SCHEDULE OF VALUES FORM

PARTICULARS:

THE FOLLOWING IS A COST BREAKDOWN REFERENCED IN THE BID SUBMITTED BY: (BIDDER)_____

TO (OWNER) BATTERY PARK CITY AUTHORITY
DATED_____ AND WHICH IS AN INTEGRAL PART OF THE BID FORM

ITEM DESCRIPTIONS

GENERAL CONTRACTORS OVERHEAD AND PROFIT ..... $_____
MOBILIZATION AND DEMOBILIZATION ..... $_____
00 60 00 – PERFORMANCE AND PAYMENT BONDS ..... $_____
01 50 00 - TEMPORARY FACILITIES AND CONTROLS ..... $_____

DIVISION 02 -- EXISTING CONDITIONS
02 41 00 - SELECTIVE DEMOLITION ..... $_____

DIVISION 03 -- CONCRETE
03 10 00 - CONCRETE FORMING AND ACCESSORIES ..... $_____
03 20 00 - CONCRETE REINFORCING ..... $_____
03 30 00 - CAST-IN-PLACE CONCRETE ..... $_____

DIVISION 04 -- MASONRY (NOT USED)
04 05 11 - MASONRY MORTARING AND GROUTING ..... $_____
04 42 00 - EXTERIOR STONE CLADDING ..... $_____

DIVISION 05 -- METALS
05 12 00 - STRUCTURAL STEEL FRAMING ..... $_____
05 50 00 - METAL FABRICATIONS ..... $_____
05 52 13 - PIPE RAILINGS ..... $_____

DIVISION 06 -- WOOD, PLASTICS, AND COMPOSITES
06 10 00 - ROUGH CARPENTRY ..... $_____
06 13 23 - HEAVY TIMBER CONSTRUCTION ..... $_____
06 15 16 - WOOD ROOF DECKING ..... $_____
06 18 00 - GLUED-LAMINATED CONSTRUCTION ..... $_____

DIVISION 07 -- THERMAL AND MOISTURE PROTECTION
07 13 00 - PRE-APPLIED AND SELF-ADHERING SHEET MEMBRANE WATERPROOFING ..... $_____
07 41 13 - METAL ROOF PANELS ..... $_____
07 46 23 - WOOD SIDING ..... $_____
07 62 00 - SHEET METAL FLASHING AND TRIM ..... $_____
07 92 00 - JOINT SEALANTS ..... $_____

DIVISION 08 -- OPENINGS
08 11 13 - HOLLOW METAL DOORS AND FRAMES ..... $_____
08 51 13 - ALUMINUM WINDOWS ..... $_____
08 71 00 - DOOR HARDWARE ..... $_____
08 80 00 – GLAZING ..... $_____

DIVISION 09 -- FINISHES
09 90 00 - PAINTING AND COATING ..... $_____

DIVISION 10 -- SPECIALTIES (NOT USED)

DIVISION 11 -- EQUIPMENT (NOT USED)

DIVISION 12 -- FURNISHINGS (NOT USED)

DIVISION 13 -- SPECIAL CONSTRUCTION (NOT USED)

DIVISION 14 -- CONVEYING EQUIPMENT (NOT USED)

FACILITIES SERVICES GROUP

DIVISION 21 -- FIRE SUPPRESSION (NOT USED)

DIVISION 22 – PLUMBING ..... **$**_____

DIVISION 23 -- HEATING, VENTILATING, AND AIR-CONDITIONING (HVAC) ..... **$**_____

DIVISION 25 -- INTEGRATED AUTOMATION (NOT USED)

DIVISION 26 -- ELECTRICAL

26 05 00 - COMMON WORK RESULTS FOR ELECTRICAL ..... $_____
26 05 19 - LOW-VOLTAGE ELECTRICAL POWER CONDUCTORS AND CABLES ..... $_____
26 05 26 - GROUNDING AND BONDING FOR ELECTRICAL SYSTEMS ..... $_____
26 05 29 - HANGERS AND SUPPORTS FOR ELECTRICAL SYSTEMS ..... $_____
26 05 33 - RACEWAYS AND BOXES FOR ELECTRICAL SYSTEMS ..... $_____
26 05 43 - UNDERGROUND DUCTS AND RACEWAYS FOR ELECTRICAL SYSTEMS $_____
26 05 44 - SLEEVES AND SLEEVE SEALS FOR ELECTRICAL RACEWAYS AND CABLING ..... $_____
26 05 46 - VIBRATION AND SEISMIC CONTROLS FOR ELECTRICAL SYSTEMS ..... $_____
26 05 53 - IDENTIFICATION FOR ELECTRICAL SYSTEMS ..... $_____
26 05 54 - ELECTRICAL COMMISIONING REQUIREMENTS ..... $_____
26 09 23 - LIGHTING CONTROL DEVICES ..... $_____
26 20 01 - FEEDERS AND BRANCH CIRCUITRY ..... $_____
26 22 00 - LOW-VOLTAGE TRANSFORMERS (INSTALLATION) ..... $_____
26 24 13 – SWITCHBOARDS ..... $_____
26 24 16 – PANELBOARDS ..... $_____
26 27 13 - ELECTRICITY METERING (UTILITY) ..... $_____
26 27 26 - WIRING DEVICES ..... $_____
26 28 13 – FUSES ..... $_____
26 28 16 - ENCLOSED SWITCHES AND CIRCUIT BREAKERS ..... $_____
26 51 00 - LIGHTING

DIVISION 27 -- COMMUNICATIONS (NOT USED)

DIVISION 28 -- ELECTRONIC SAFETY AND SECURITY (NOT USED)

SITE AND INFRASTRUCTURE GROUP

DIVISION 31 -- EARTHWORK

31 23 16 – EXCAVATION ..... $_____
31 23 23 – FILL ..... $_____
31 63 29 - CAISSONS ..... $_____

DIVISION 32 -- EXTERIOR IMPROVEMENTS

32 11 23 - AGGREGATE BASE COURSES ..... $_____
32 14 23 - ASPHALT UNIT PAVING ..... $_____
32 93 00 – PLANTS ..... $_____

TOTAL BID SUM ..... $_____

END OF PROPOSED SCHEDULE OF VALUES FORM

EXHIBIT F

Unit Pricing Schedule

(attached)

SECTION 00 43 22 - UNIT PRICES FORM

PARTICULARS

The following is the list of Unit Prices referenced in the bid submitted by:

(Bidder) _____ TO (**Owner):**

_____ dated _____ and which is an integral part of

the Bid Form.

The following are Unit Prices for specific portions of the Work as listed, and are applicable to authorized variations from the Contract Documents.

UNIT PRICE LIST

ITEM DESCRIPTION	UNIT QTY	UNIT VALUES Add	Deduct
1) Excavation and backfill with excavated material and/or removal from site as required, open	Cu. Yd.	$_____	$_____
2) Excavation and backfill with excavated material and/or removal from site as required, trench	Cu. Yd.	$_____	$_____
3) Rock excavation and removal from site, open.	Cu. Yd.	$_____	$_____
4) Rock excavation and removal from site, trench	Cu. Yd.	$_____	$_____
5) General fill	Cu. Yd	$_____	$_____
6) Structural fill	Cu. Yd	$_____	$_____
7) Granular gravel fill	Cu. Yd	$_____	$_____
8) Granular pea gravel fill	Cu. Yd	$_____	$_____
9) Sand fill	Cu. Yd	$_____	$_____
10) Foundation concrete in place	Cu. Yd.	$_____	$_____
11) Foundation reinforcing steel in place	Lb.	$_____	$_____
12) Foundation forms in place and stripped	Sq. Ft.	$_____	$_____

END OF UNIT PRICES FORM

EXHIBIT G

Labor Rates

5.01 Project Manager - per hour	$_____	O/T $_____
5.02 Superintendent - per hour	$_____	O/T $_____
5.03 Roofer - per hour	$_____	O/T $_____
5.04 Mason - per hour	$_____	O/T $_____
5.05 Welder - per hour	$_____	O/T $_____
5.06 Carpenter - per hour	$_____	O/T $_____
5.07 Laborer - per hour	$_____	O/T $_____
5.08 Plumber - per hour	$_____	O/T $_____
5.09 Electrician - per hour	$_____	O/T $_____
5.10 Sheet Metal Mechanic	$_____	O/T $_____
5.11 Painter	$_____	O/T $_____

EXHIBIT H

LIST OF BPCA BOARD MEMBERS AND EMPLOYEES

BPCA BOARD MEMBERS
Dennis Mehiel
Frank J Branchini
Donald Capoccia
Martha J Gallo
Lester Petracca
Hector Batista

BPCA EMPLOYEES
Curtis Afzal
Elsa Alvarez
Dana Anders
Anthony Andriano
Stephen Arciold
Kathleen Bailey
Marie Baptiste
Freddy Belliard
Scott Birdseye
Nidia Blake-Reeder
Lauren Brugess
Nancy Buivid
Anthony Buquicchio
Monica Centeno
Betty Chin
Adam Choper
Carlton Chotalal
Deshay Crabb
Gwendolyn Dawson
Henri delaVega
Gilbert Depadua
Paul Diaz-Larui
Abigail Ehrlich
Maria Ellison
Richard Faraino
Anitra Fauntelroy
Eric T. Fleisher
Robin Forst
Joseph Ganci
Julissa Garcia
Luis Garcia
Abigail Goldenberg
Lenron Goode
Neresa Gordon
Ned Greenberg

Patrick Greene
Evelyn Gregg
Kelly Grogan
Robert Hansen
Nicole Heater
Sankar Heerah
Sonia Henry
Hector Herrera
Craig Hudon
Cherish Hurley
Shari Hyman
Amy Jogie
Benjamin Jones
Kadia Kane
Roland Kemp
Susie Kim
Karl Koenig
Betzayda Laboy
Leandro Lafuente
Michael LaMancusa
Della Lee
Triny Lima
Rene Lopcy
Luis Lopez
Robert Maggi
Evelin Maisonet
Evonne Marche
Philip Mason
Kevin McCabe
Ellen McCarthy
Brenda McIntyre
Princess McNeill
Shinay McNeill
Vanessa Mesine
Ronnie Mohammed
Bertha Narcisse
Robert Nesmith
Siu NG
Yoshihiro Nishida
Kevin O'Toole
Hector Oyola
Willem Paillant
Gladys Pearlman
Dahlia Pena
Churman Persaud
Anthony Peterson
Bruno Pomponio
Katherine Powell
Sandra Power

Alix Pustilnik
Robert Quon
Jason Rachnowitz
Madelin Ramirez
Manuel Rivera
Anthony Robinson
Andrea Rodriguez
Nelson Rogers
Jose Rosada
Holly Ross
Sebastian Rozalski
Carlos Santiago
Jean Schwartz
Lindsey Senn
Robert Serpico
Rekha Sewraj-Kumar
Sean Simon
Kemnarine Singh
Seema Singh
Timothy Skipper
Linda Soriero
Kareem Starks
Jerome Sturiano
John Tam
Alexis Torres
Ryan Torres
Douglas VanHorn
Noe Velasquez
Evangelio Villalobos
Sharon Wade
David Wallace
Peter Wheelwright
Eric White
Angela Whitehead
Dwight Williams
Kenneth Windman
Al Wright
Jouli Yohannes
Julian Zapata
Bingxin Zheng

EXHIBIT I

Assumption of Risk, Waiver of Liability and Release

("Waiver and Release")

PLEASE READ THIS DOCUMENT CAREFULLY - IT AFFECTS YOUR RIGHTS

The undersigned desires to perform an inspection of the conditions of the North Cove Marina facilities mentioned in the North Cove Marina Operators RFP (the "RFP") issued by the Battery Park City Authority d/b/a Hugh L. Carey Battery Park City Authority (the "Authority") on or about September 22, 2014. The undersigned has been advised and understands that the inspection of the entire site, including the Marina, Lower Quays and the electrical service vaults located below ground (the "Site"), can be dangerous and involve numerous risks, including death or serious bodily injury. As an inducement to the Authority, the Battery Park City Parks Conservancy (the "Conservancy"), the City of New York, the State of New York, Brookfield Properties, North Cove **Marina** Management and all firms and persons related to, or involved in, the design, construction and development of the Site (the "Project Team") to allow the undersigned to visit the Site and observe existing conditions, the undersigned, for himself/herself/itself and his/her/its successors, heirs, assigns, and legal representatives, does hereby expressly agree and acknowledge the following:

1. The undersigned hereby voluntarily assumes any and all risks involved in, or in any way related to, the undersigned's visit (including the visit of any of its employees, agents or representatives) to the Site and observation of existing conditions, including, but not limited to, the risk of death, bodily injury or property damage resulting from such visit or observation, including the unavailability of emergency medical care or the negligent or deliberate acts of other persons.

2. The undersigned releases and forever discharges any and all members of the Project Team, together with their members, directors, managers, officers, employees, agents, affiliates, successors, heirs and assigns, from, and agrees not to sue them on account of or in connection with, any liabilities, claims, causes of action, suits, obligations, injuries, damages, judgments, costs, or expenses, including attorney's fees and disbursements, arising out of the undersigned's visit (including the visit of any of its employees, agents or representatives) to the Site and observation of existing conditions, including, not limited to, those based on death, bodily injury, or property damage, except when caused solely by the gross negligence of any member of the Project Team. THE FORGOING RELEASE IS INTENDED TO BE THE MAXIMUM AND BROADEST RELEASE PERMITTED BY LAW.

3. The undersigned waives the protection afforded by any statute or law in any jurisdiction whose purpose, substance and/or effect is to provide that a general release does not extend to claims

which the person giving the release does not know or suspect to exist at the time of executing the release.

4. The undersigned agrees to indemnify and hold harmless any and all members of the Project Team and their members, directors, managers, officers, employees, agents, affiliates, successors, heirs and assigns, to the fullest extent permitted by law, from and against any and all liabilities, claims, causes of action, suits, obligations, injuries, damages, judgments, costs or expenses, including reasonable attorney's fees and disbursements, which arise in any way from the undersigned's conduct (including the conduct of any of its employees, agents or representatives) at the Site and any and all damages to property on such Site, injury to any other person at such Site, including areas located underwater, caused, directly or indirectly, by the undersigned, whether by inadvertence, negligence, willful misconduct or otherwise.

5. The undersigned acknowledges and agrees that he/she/it is familiar with and understands industry standard safety procedures and rules for conducting an inspection of the Site and for observing conditions at the Site. The undersigned agrees to strictly abide by all safety and other rules and expressly agrees not to participate in any events at the Site under the influence of alcohol and/or any drugs.

6. The undersigned acknowledges and agrees that he/she/it has been advised of the following nonexclusive list of potentially dangerous conditions: (1) the inherent risks associated with the nature of the inspection activity itself; and (2) the inherent risks associated with a property located in and around a marina, including underground areas on such property.

7. The undersigned represents and warrants that he/she/it (a) assumes full responsibility for his/her/its own safety and health and for all known and unknown risks and damages in visiting the Site, and (b) has not relied on information given or not given to him/her/it by the Project Team regarding the risks or dangers present at the Site.

8. **The undersigned shall provide a certificate of insurance meeting or exceeding the following minimum coverage levels:**

    - **Commercial General Liability Insurance limits shall not be less than $1,000,000 per each occurrence;**
    - **Umbrella Liability limits shall not be less than $1,000,000.**

    The Authority, the Conservancy, the City of New York and the State of New York shall be listed as additional insureds on CG 2010 (11/85) or similar form.

9. The undersigned further agrees not to disclose or divulge to any person in any manner, without the prior written approval of the Authority, any information concerning the Site for any purpose whatsoever, except as may be necessary to prepare and submit a proposal in response to the RFPs.

10. The undersigned agrees that in the event of any accident which may require immediate medical, dental or other emergency care, transportation and emergency medical services, in which no next of kin can be notified in a reasonable amount of time through reasonable means, the Authority is hereby authorized, but not required, to take all necessary actions as relates to immediate medical,

dental or other emergency care, transportation and emergency medical services as warranted in the course of care of the undersigned. The undersigned agrees that he/she/it shall be responsible for all fees and expenses as they relate to this paragraph.

The undersigned has read this Waiver and Release, understands that by making this Waiver and Release, he/she/it surrenders valuable rights and does do so freely and voluntarily. The undersigned understands that the terms contained herein are contractual and not a mere recital; and has signed this Waiver and Release as his/her/its own free act.

This Waiver and Release shall be governed by, and construed in accordance with, the laws of the State of New York, without reference to its conflicts of laws rules.
Invalidity of any provision of this Waiver and Release shall not affect other provisions.

_____
Signature

_____
Printed Name (and title, if applicable)

_____
Name of Organization (if applicable)

_____
Emergency Contact Name and Number

Date: _____